DISCLAIMER:

The use of the deliverables (deliverables shall include, but not limited to, software, application examples, hardware, target boards, evaluation boards, starter kits, schematics, engineering samples of IC's etc.) is subject to the terms and conditions of Spansion LLC and its affiliates ("SPANSION") as set out below and in (i) the terms and conditions of the License Agreement and/or the Sale and Purchase Agreement and/or any other agreement under which deliverables have been delivered, (ii) the technical descriptions and (iii) all accompanying written materials.

1. Please note that the deliverables are intended for and must only be used for test applications in an evaluation laboratory environment.

2. The software deliverables are provided on an as-is basis without charge and are subject to alterations. It is the user's obligation to fully test the software in its environment and to ensure proper functionality, qualification and compliance with component specifications.

3. Regarding hardware deliverables, the following limited warranty shall apply:

Except as otherwise provided in the following paragraphs, for a period of one (1) year from date of shipment to customer ("Warranty Period"), SPANSION warrants the hardware deliverables (i) are free of defects in material and workmanship, and (ii) conform to SPANSION applicable data sheet specifications (available at www.spansion.com or upon request).
This warranty does not extend beyond the first purchaser of the deliverables. The liability of SPANSION under this warranty is limited, at SPANSION's option, solely to repair the deliverable, to send replacement deliverable, or to make an appropriate credit adjustment or refund in an amount not to exceed the original purchase price actually paid for the deliverable returned to SPANSION. SPANSION'S warranty obligations are conditioned upon the following: (a) SPANSION is promptly notified in writing by customer during the applicable warranty period of any defect or nonconformance in the deliverable, (b) customer obtains authorization from SPANSION to return the defective deliverable, (c) the defective deliverable is returned to SPANSION in accordance with SPANSION'S shipping instructions set forth below, and (d) SPANSION'S examination of such deliverable discloses to its satisfaction that any defect or nonconformance actually existed and was not caused by improper use or operation outside of the data sheet specifications for the deliverable, abuse, negligence, improper installation, accident, loss or damage in transit, or unauthorized repair or alteration by a person other than SPANSION. Customer shall ship such defective deliverable to SPANSION via SPANSION'S carrier, collect. Risk of loss will transfer to SPANSION when the defective deliverable is provided to SPANSION'S carrier. If customer fails to adhere to these warranty returns guidelines, customer shall assume all risk of loss and shall pay for all freight to SPANSION'S specified location. This warranty shall not apply to any deliverables that have been repaired or altered, except those which have been repaired or altered by SPANSION. The aforementioned provisions do not extend the original warranty period of any deliverable that has either been repaired or replaced by Seller.

THESE WARRANTIES ARE IN LIEU OF ALL OTHER WARRANTIES, EXPRESSED, IMPLIED OR STATUTORY, INCLUDING, BUT NOT LIMITED TO, THE IMPLIED WARRANTIES OF MERCHANTABILITY, FITNESS FOR A PARTICULAR PURPOSE, NONINFRINGEMENT, AND ANY WARRANTY OTHERWISE ARISING OUT OF ANY PROPOSAL, SPECIFICATION OR SAMPLE. SPANSION NEITHER ASSUMES NOR AUTHORIZES ANY OTHER PERSON TO ASSUME FOR IT ANY OTHER LIABILITIES. THE FOREGOING CONSTITUTES CUSTOMER'S SOLE AND EXCLUSIVE REMEDY FOR THE FURNISHING OF DEFECTIVE OR NONCONFORMING DELIVERABLES.

4. The following limitation of liability shall apply for all deliverables

EXCEPT FOR DAMAGES FOR BODILY INJURY OR DEATH, SPANSION SHALL NOT BE LIABLE FOR ANY INDIRECT, INCIDENTAL, SPECIAL, RELIANCE, OR CONSEQUENTIAL DAMAGES, RELIANCE DAMAGES, AND/OR PUNITIVE, OR EXEMPLARY DAMAGES, WHETHER ANY SUCH DAMAGES ARE BASED ON CONTRACT, TORT OR ANY OTHER LEGAL THEORY, AND WHETHER OR NOT SPANSION HAS BEEN INFORMED OF THE POSSIBILITY OF SUCH DAMAGES, AND NOTWITHSTANDING ANY FAILURE OF ESSENTIAL PURPOSE OF ANY LIMITED REMEDY.

REGARDLESS OF THE BASIS ON WHICH CUSTOMER IS ENTITLED TO CLAIM DAMAGES FROM SPANSION (INCLUDING FUNDAMENTAL BREACH, NEGLIGENCE, MISREPRESENTATION, OR OTHER CONTRACT OR TORT CLAIM), SPANSION ENTIRE LIABILITY IN ANY CALENDAR YEAR, REGARDLESS OF THE NUMBER OF CLAIMS, SHALL NOT EXCEED FIFTY PERCENT (50%) OF THE TOTAL AMOUNT PAID BY CUSTOMER TO SPANSION FOR THE DELIVERABLES SOLD IN SUCH CALENDAR YEAR.

5. Should one of the above stipulations be or become invalid and/or unenforceable, the remaining stipulations shall stay in full effect.

6. The contents of this document are subject to change by SPANSION without a prior notice, thus contact SPANSION about the latest one.

(c) 2013, SPANSION LLC

SK-FM4-216-ETHERNET

Ethernet
SK-FM4-216-ETHERNET_05-ETHERNET.SCHDOC

Main Features:

- Spansion FM4 Microcontroller S6E2CCAL0A
- Ethernet
- 2x CAN + 1x CAN FD
- I²S Codec
- Motorcontrol Interface
- Spansion Flash Memory S25FL164K via QuadSPI Interface
- Spansion S/W TFT Interface
- 2x Spansion Multicon Flexible Serial Interface
- Spansion Software Touch
- SD Card

CAN and Human-Machine-Interface
SK-FM4-216-ETHERNET_03-CAN_HMI.SCHDOC

MCU and Power Supply
SK-FM4-216-ETHERNET_02-MCU.SCHDOC

Debug and Serial Interfaces
SK-FM4-216-ETHERNET_04-JTAG_UART.SCHDOC

Cable1
USB-A-B-180

Cable2
RJ45 — RJ45
Ethernet cable, violet, 1.5m Cat.5e

Motor Control Interface
SK-FM4-216-ETHERNET_07-MOTOR.SCHDOC

USB and Optional S/W TFT Interface
SK-FM4-216-ETHERNET_06-USB_TFT.SCHDOC

```
/*****************************************************************************/
/*                (C) Spansion Inc.                                          */
/* The schematic is provided without charge for demonstration purposes       */
/* only, subject to alterations.                                             */
/* Spansion Inc. does not warrant that the deliverables do not infringe      */
/* any third party intellectual property right (IPR). In the event that      */
/* the deliverables infringe a third party IPR it is the sole                */
/* responsibility of the customer to obtain necessary licenses to            */
/* continue the usage of the deliverable.                                    */
/* Spansion Inc. disclaims any warranty and liability.                       */
/* (V1.4)                                                                    */
/*****************************************************************************/
```

All parts with values in [brackets] are not assembled.

Drillhole in every corner of the board

DH1 Drillhole 3.2mm — DH2 Drillhole 3.2mm
DH3 Drillhole 3.2mm — DH4 Drillhole 3.2mm

Product:	SK-FM4-216-ETHERNET		
Sheet:	2 of 8	Doc Revision:	V1.1
		HW Revision:	V1.0
Drawn by:	CNo	Date:	10/2/2014
File:	SK-FM4-216-ETHERNET_01.SchDoc		

Spansion Inc.
http://www.spansion.com
mcu-ticket-de@spansion.com

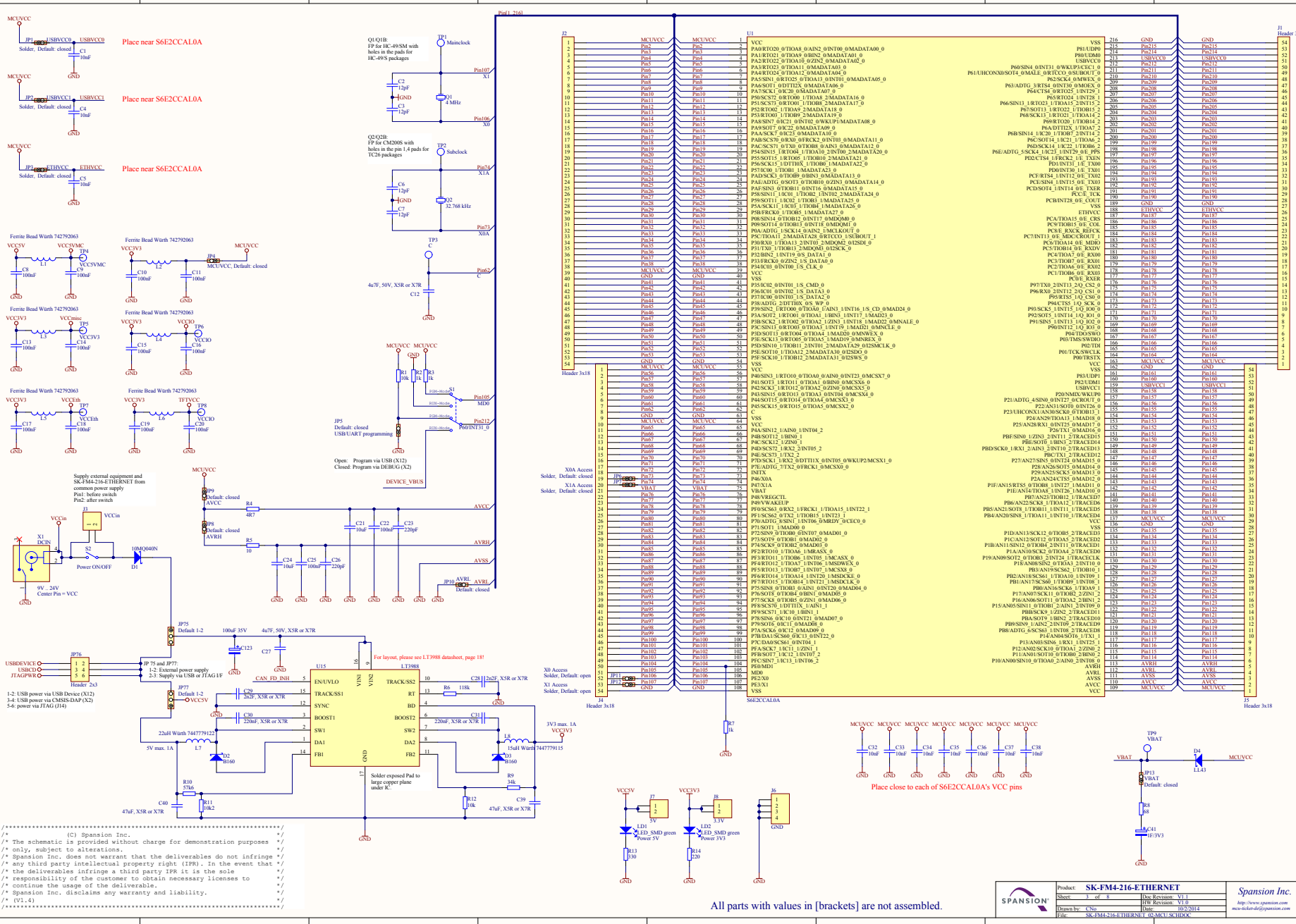
Place near S6E2CCAL0A
Place near S6E2CCAL0A
Place near S6E2CCAL0A
Ferrite Bead Würth 742792063
Ferrite Bead Würth 742792063
Ferrite Bead Würth 742792063
Ferrite Bead Würth 742792063
Ferrite Bead Würth 742792063
Ferrite Bead Würth 742792063
Supply external equipment and SK-FM4-216-ETHERNET from common power supply
Pin1: before switch
Pin2: after switch
Power ON/OFF
9V .. 24V
Center Pin = VCC
10MQ040N
Default: closed
Default: closed
Default: closed

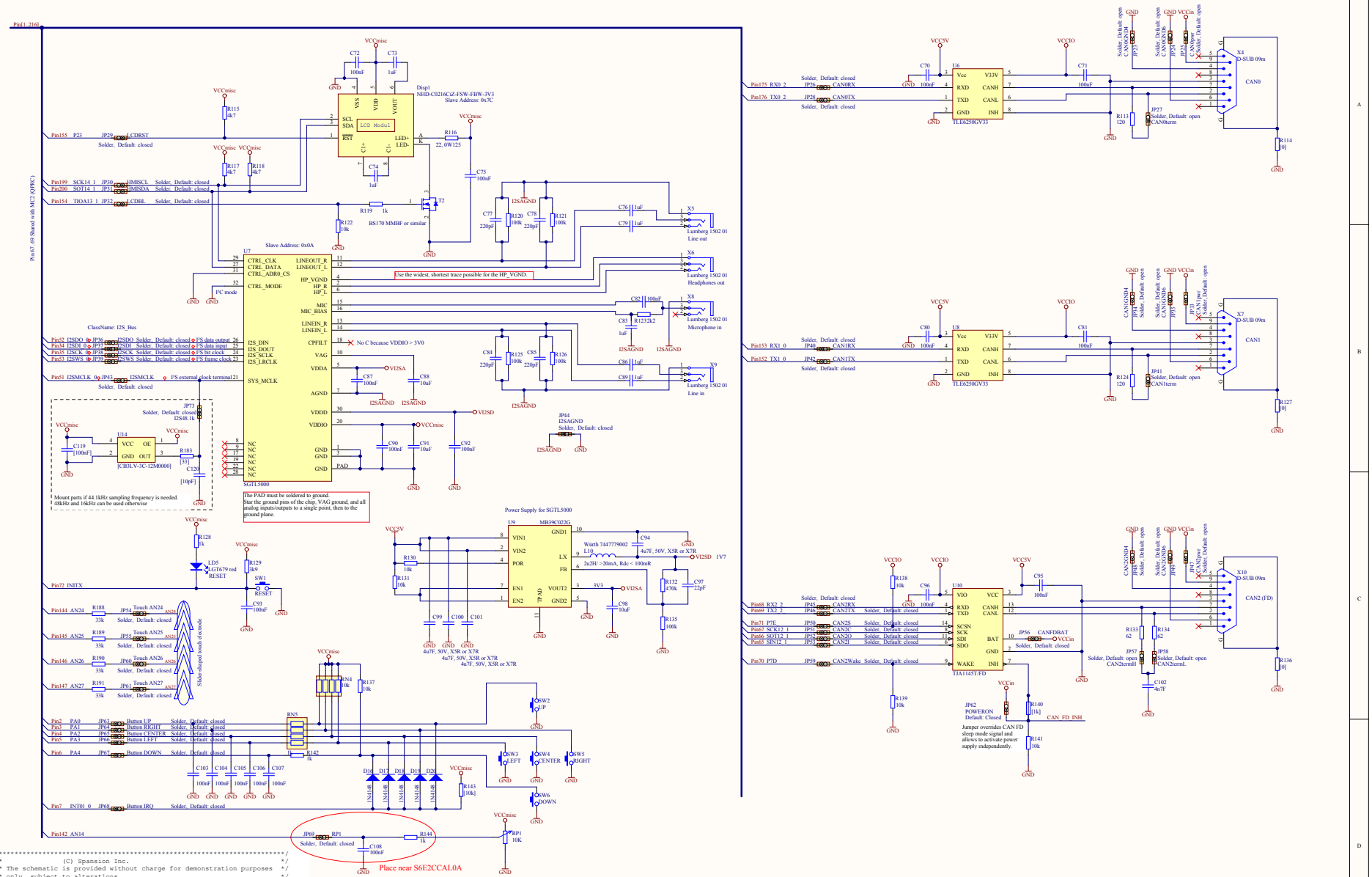


```
/*************************************************************************/
/*                (C) Spansion Inc.                                      */
/* The schematic is provided without charge for demonstration purposes  */
/* only, subject to alterations.                                         */
/* Spansion Inc. does not warrant that the deliverables do not infringe */
/* any third party intellectual property right (IPR). In the event that */
/* the deliverables infringe a third party IPR it is the sole            */
/* responsibility of the customer to obtain necessary licenses to        */
/* continue the usage of the deliverable.                                */
/* Spansion Inc. disclaims any warranty and liability.                   */
/* (V1.4)                                                                */
/*************************************************************************/
```

All parts with values in [brackets] are not assembled.

SPANSION	Product: SK-FM4-216-ETHERNET		Spansion Inc.
	Sheet: 4 of 8	Doc Revision: V1.1	http://www.spansion.com
		HW Revision: V1.0	mcu-ticket-de@spansion.com
	Drawn by: CNo	Date: 10/2/2014	
	File: SK-FM4-216-ETHERNET_03-CAN_HMI.SCHDOC		

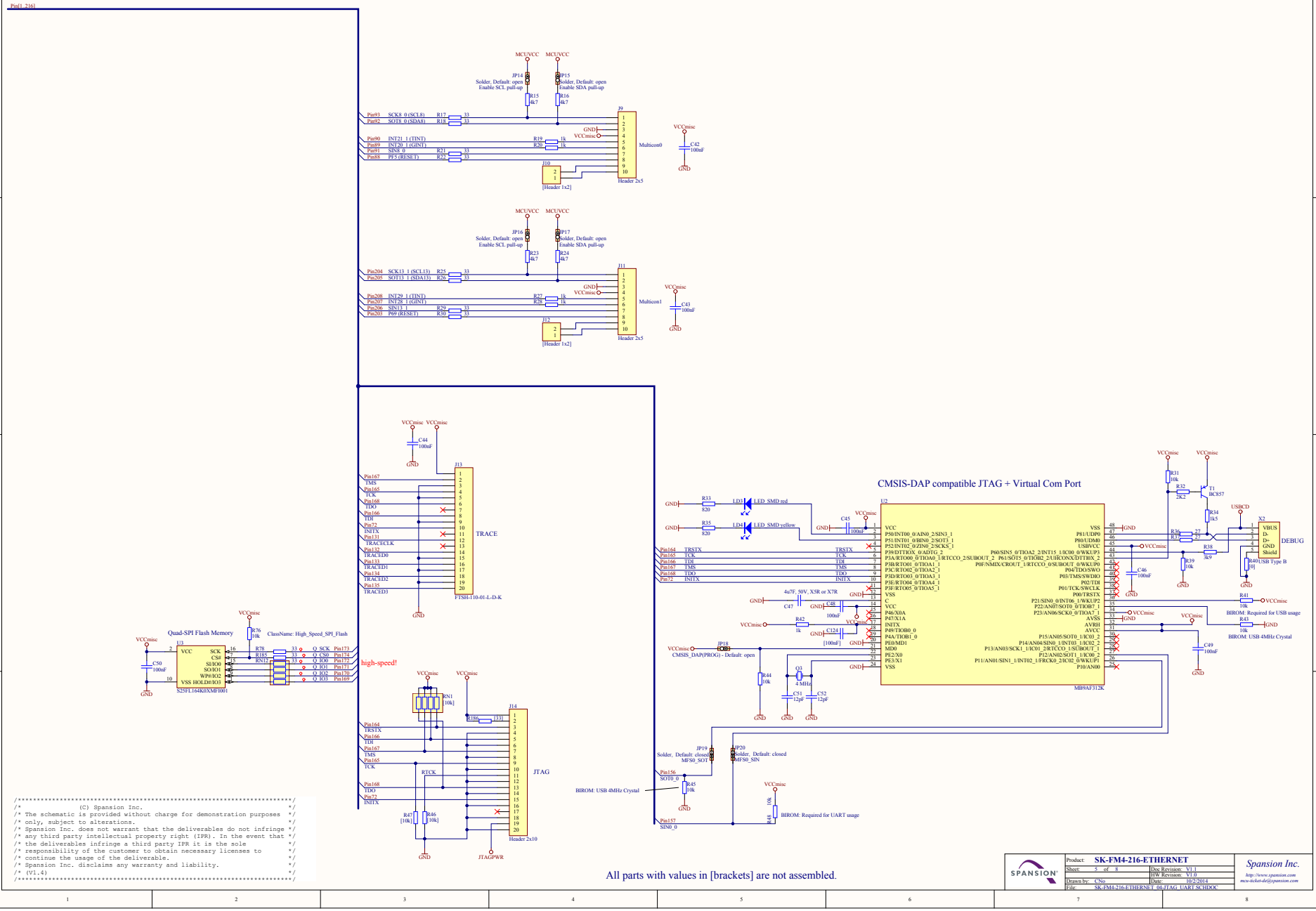
CMSIS-DAP compatible JTAG + Virtual Com Port
Quad-SPI Flash Memory
high-speed!
TRACE
JTAG
DEBUG
All parts with values in [brackets] are not assembled.
/* (C) Spansion Inc. */
/* The schematic is provided without charge for demonstration purposes */
/* only, subject to alterations. */
/* Spansion Inc. does not warrant that the deliverables do not infringe */
/* any third party intellectual property right (IPR). In the event that */
/* the deliverables infringe a third party IPR it is the sole */
/* responsibility of the customer to obtain necessary licenses to */
/* continue the usage of the deliverable. */
/* Spansion Inc. disclaims any warranty and liability. */
/* (V1.4) */
SPANSION
Product: SK-FM4-216-ETHERNET
Sheet: 5 of 8
Doc Revision: V1.1
HW Revision: V1.0
Drawn by: CNo
Date: 10/2/2014
File: SK-FM4-216-ETHERNET_04-JTAG_UART_SCHDOC
Spansion Inc.
http://www.spansion.com
mcu-ticket-de@spansion.com

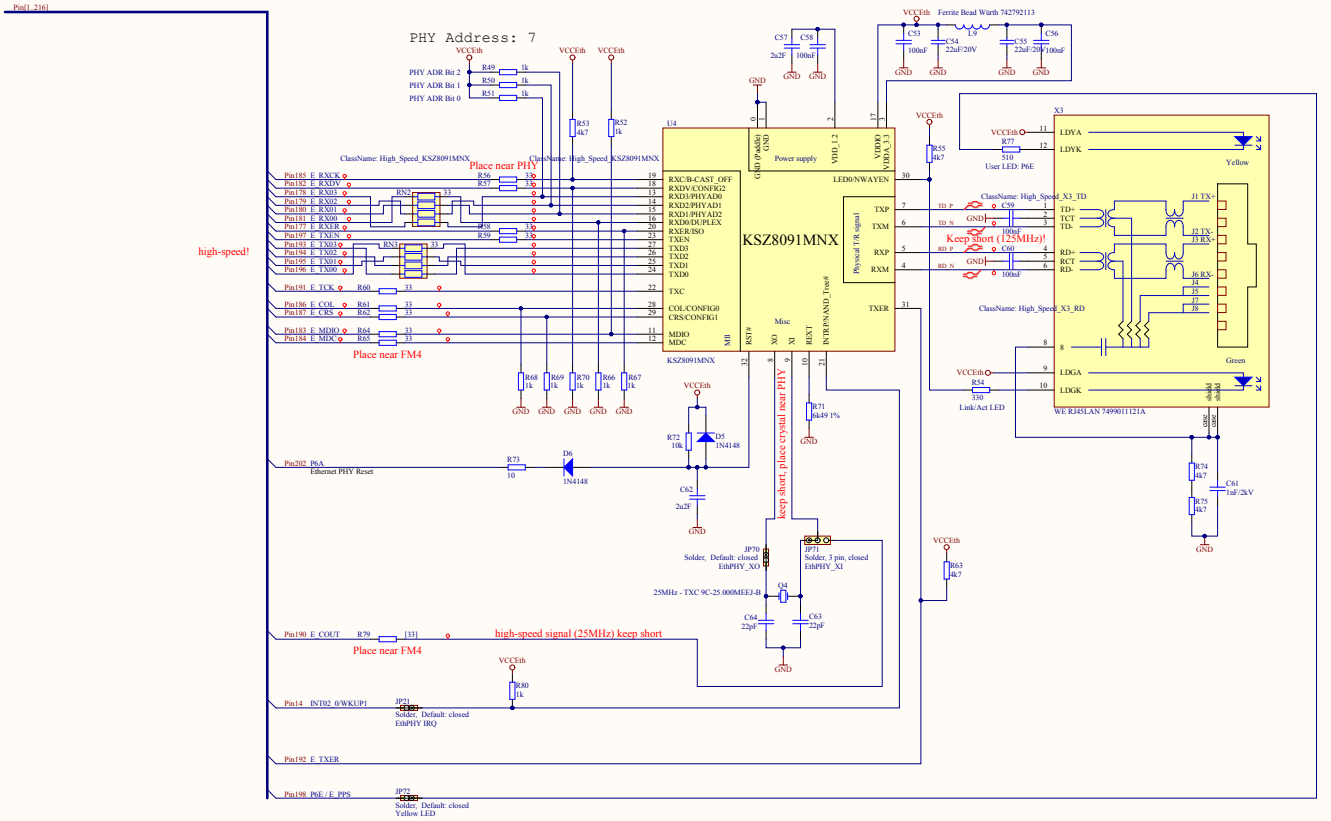


```
/*****************************************************************/
/*                    (C) Spansion Inc.                          */
/* The schematic is provided without charge for demonstration purposes */
/* only, subject to alterations.                                 */
/* Spansion Inc. does not warrant that the deliverables do not infringe */
/* any third party intellectual property right (IPR). In the event that */
/* the deliverables infringe a third party IPR it is the sole    */
/* responsibility of the customer to obtain necessary licenses to */
/* continue the usage of the deliverable.                        */
/* Spansion Inc. disclaims any warranty and liability.           */
/* (V1.4)                                                        */
/*****************************************************************/
```

All parts with values in [brackets] are not assembled.

Product:	SK-FM4-216-ETHERNET		
Sheet:	6 of 8	Doc Revision:	V1.1
		HW Revision:	V1.0
Drawn by:	CNo	Date:	10/2/2014
File:	SK-FM4-216-ETHERNET_05-ETHERNET.SCHDOC		

Spansion Inc.
http://www.spansion.com
mcu-ticket-de@spansion.com

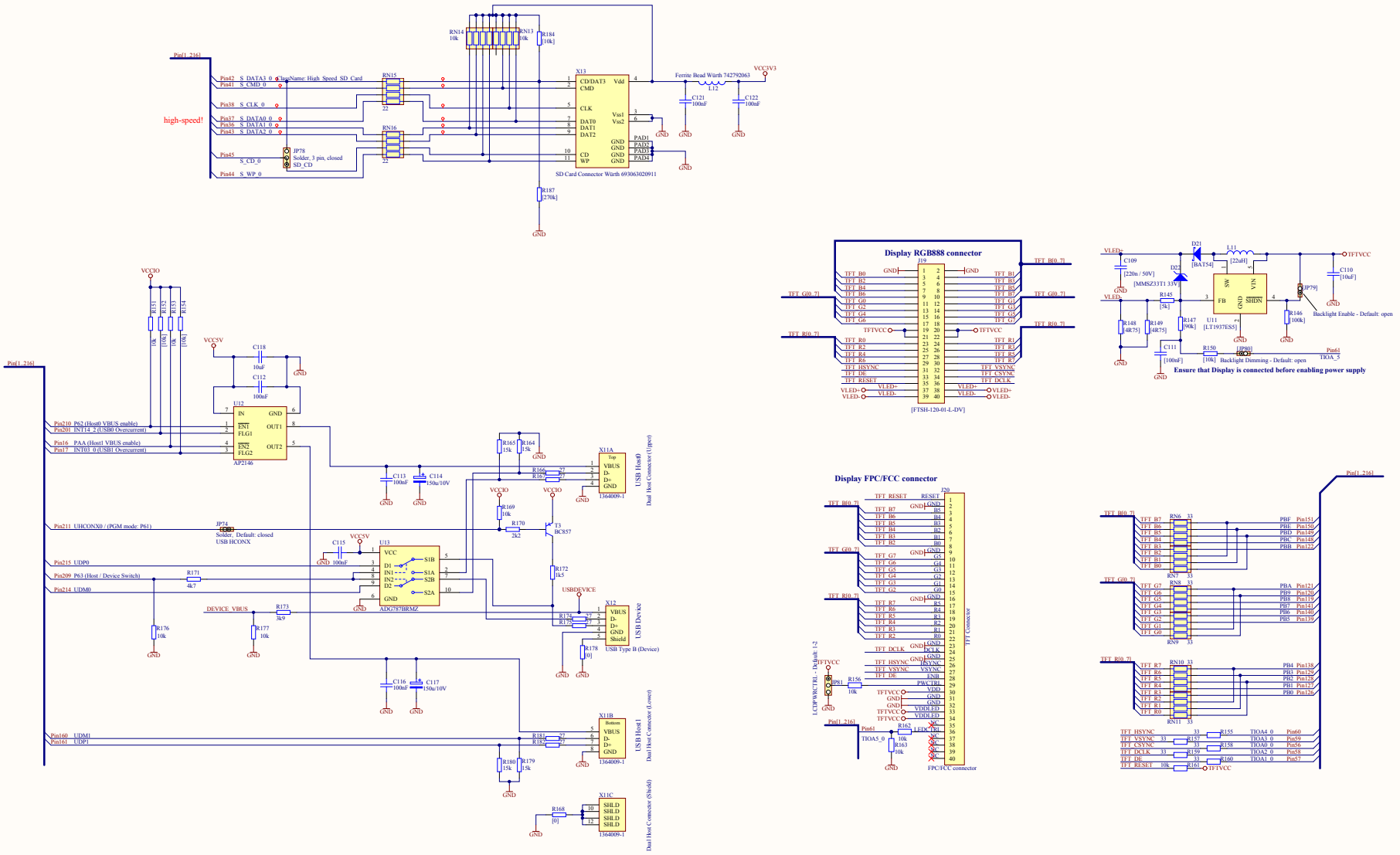


```
/*****************************************************************************/
/*                (C) Spansion Inc.                                          */
/* The schematic is provided without charge for demonstration purposes       */
/* only, subject to alterations.                                             */
/* Spansion Inc. does not warrant that the deliverables do not infringe      */
/* any third party intellectual property right (IPR). In the event that      */
/* the deliverables infringe a third party IPR it is the sole                */
/* responsibility of the customer to obtain necessary licenses to            */
/* continue the usage of the deliverable.                                    */
/* Spansion Inc. disclaims any warranty and liability.                       */
/* (V1.4)                                                                    */
/*****************************************************************************/
```

Product:	SK-FM4-216-ETHERNET
Sheet:	7 of 8
Doc Revision:	V1.1
HW Revision:	V1.0
Drawn by:	CNo
Date:	10/2/2014
File:	SK-FM4-216-ETHERNET_06-USB_TFT.SCHDOC

Spansion Inc.
http://www.spansion.com
mcu-ticket-de@spansion.com

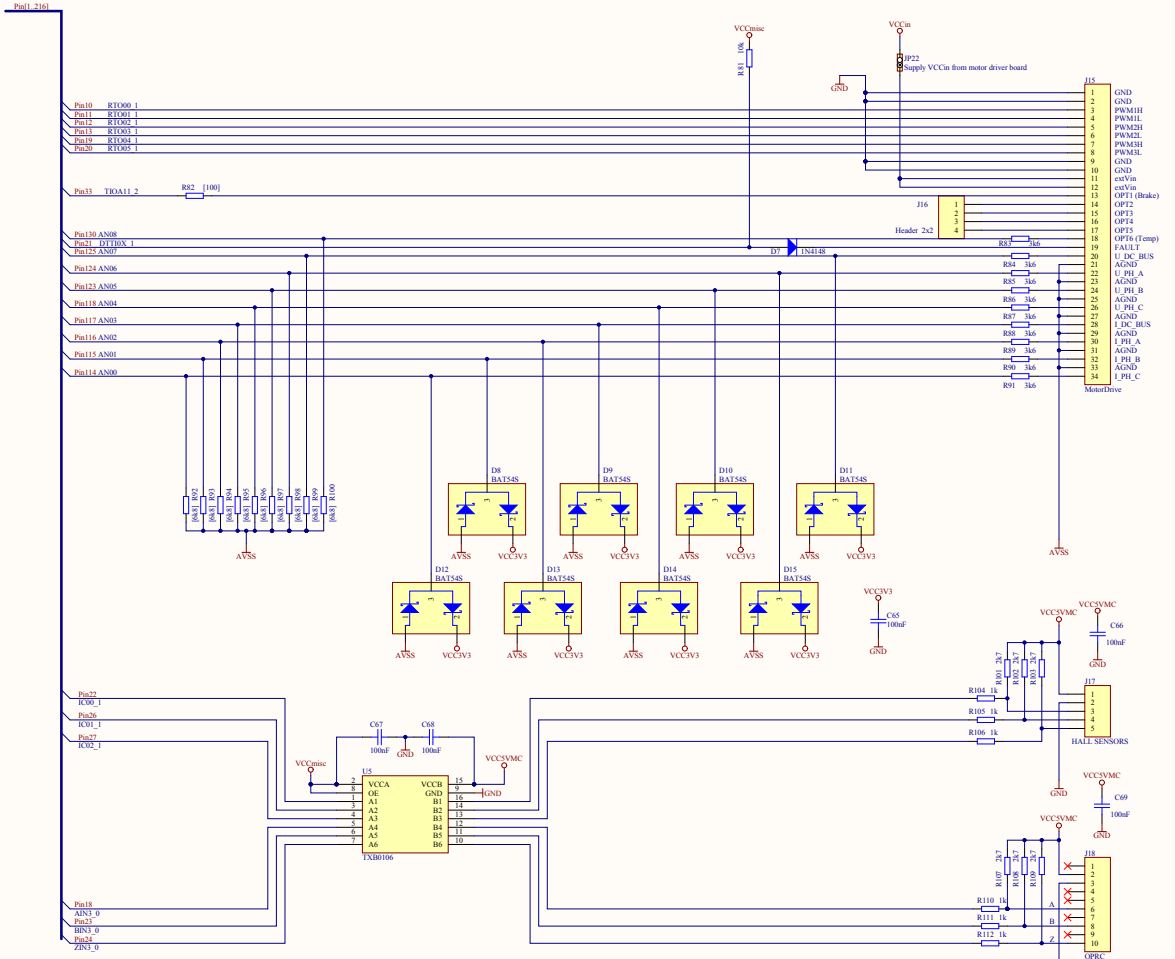


```
/*****************************************************************************/
/*                (C) Spansion Inc.                                          */
/* The schematic is provided without charge for demonstration purposes      */
/* only, subject to alterations.                                             */
/* Spansion Inc. does not warrant that the deliverables do not infringe      */
/* any third party intellectual property right (IPR). In the event that      */
/* the deliverables infringe a third party IPR it is the sole                */
/* responsibility of the customer to obtain necessary licenses to            */
/* continue the usage of the deliverable.                                    */
/* Spansion Inc. disclaims any warranty and liability.                       */
/* (V1.4)                                                                    */
/*****************************************************************************/
```

All parts with values in [brackets] are not assembled.

SPANSION	Product: SK-FM4-216-ETHERNET		Spansion Inc.
	Sheet: 8 of 8	Doc Revision: V1.1	http://www.spansion.com
		HW Revision: V1.0	mcu-ticket-de@spansion.com
	Drawn by: CNo	Date: 10/2/2014	
	File: SK-FM4-216-ETHERNET_07-MOTOR.SCHDOC		

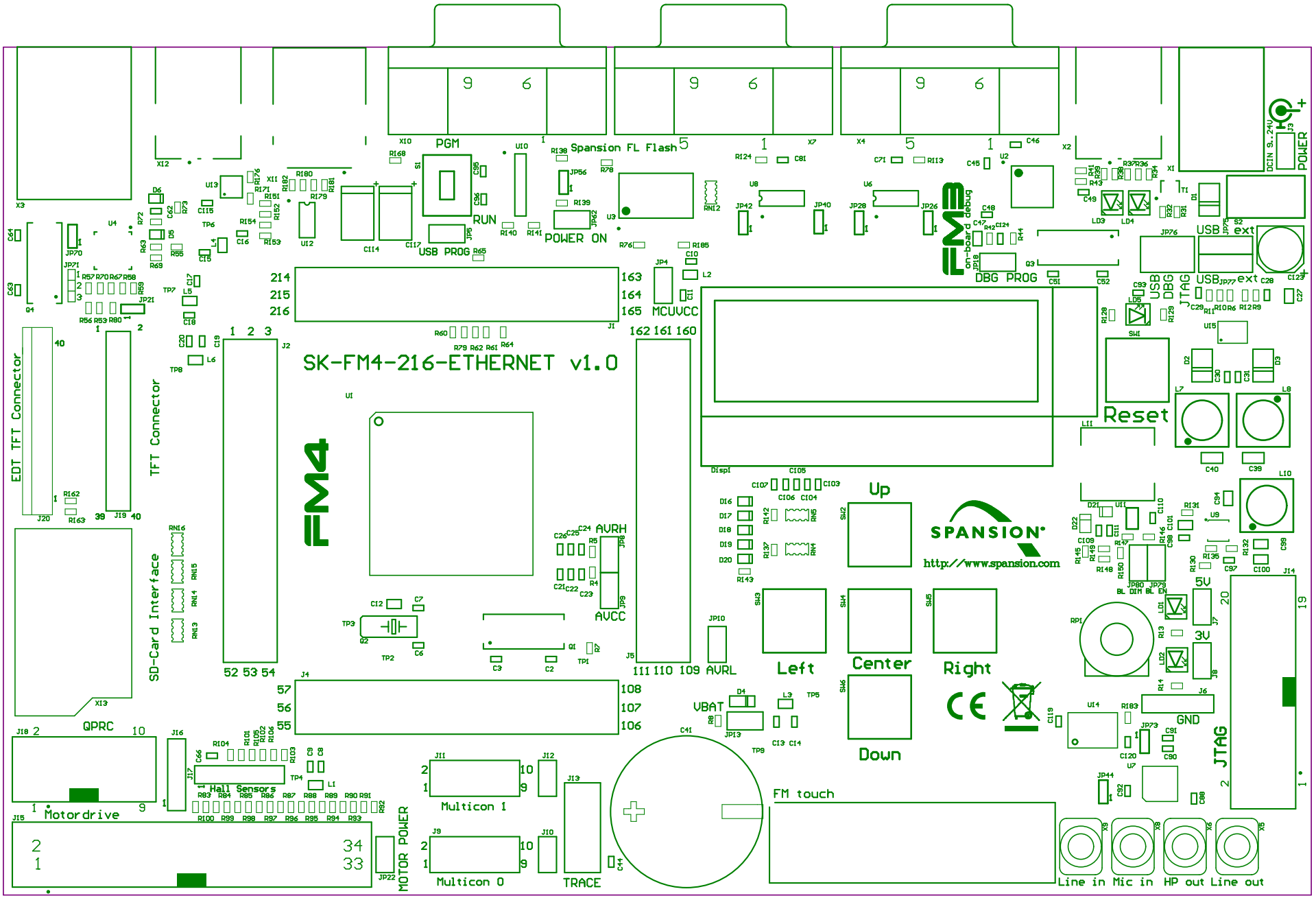
SK-FM4-216-ETHERNET v1.0
FM4
EDT TFT Connector
TFT Connector
SD-Card Interface
PGM
RUN
USB PROG
Spansion FL Flash
POWER ON
MCUVCC
DBG PROG
USB DBG
USB ext
JTAG
POWER
DCIN 9..24V
Reset
Up
Left
Center
Right
Down
SPANSION
http://www.spansion.com
AVRH
AVCC
AVRL
VBAT
5V
3V
GND
QPRC
Motordrive
Hall Sensors
MOTOR POWER
Multicon 1
Multicon 0
TRACE
FM touch
Line in
Mic in
HP out
Line out

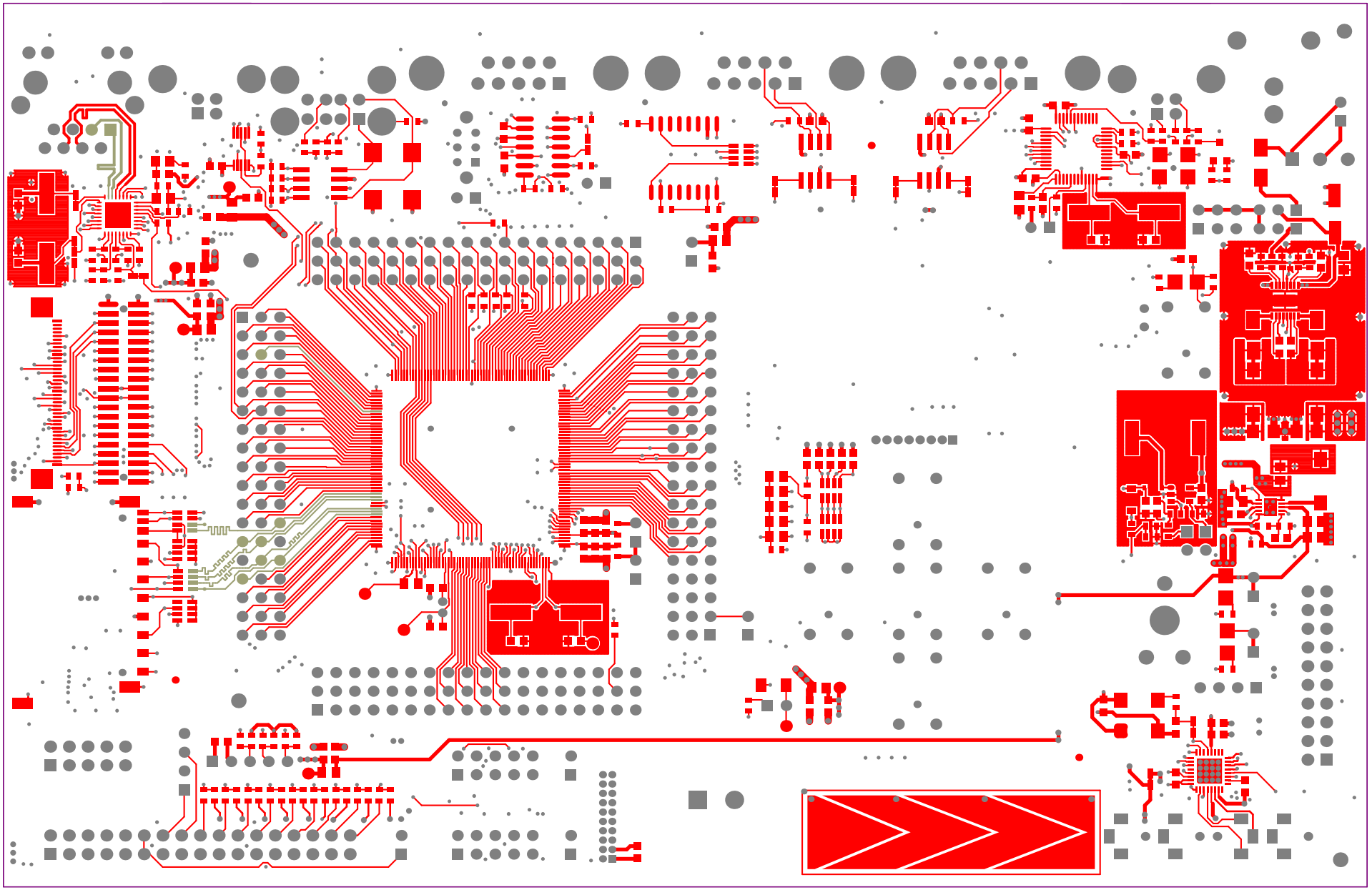

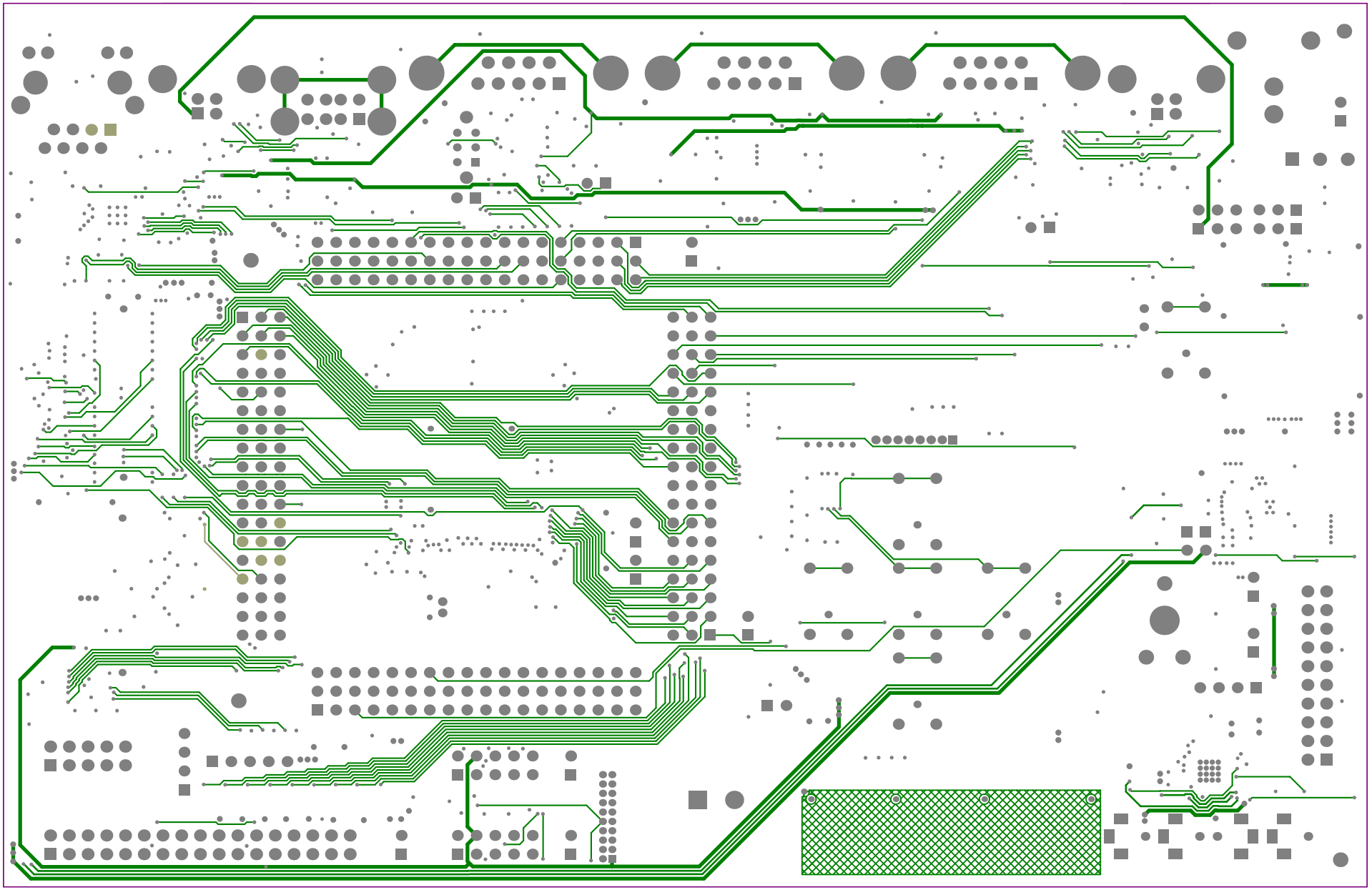

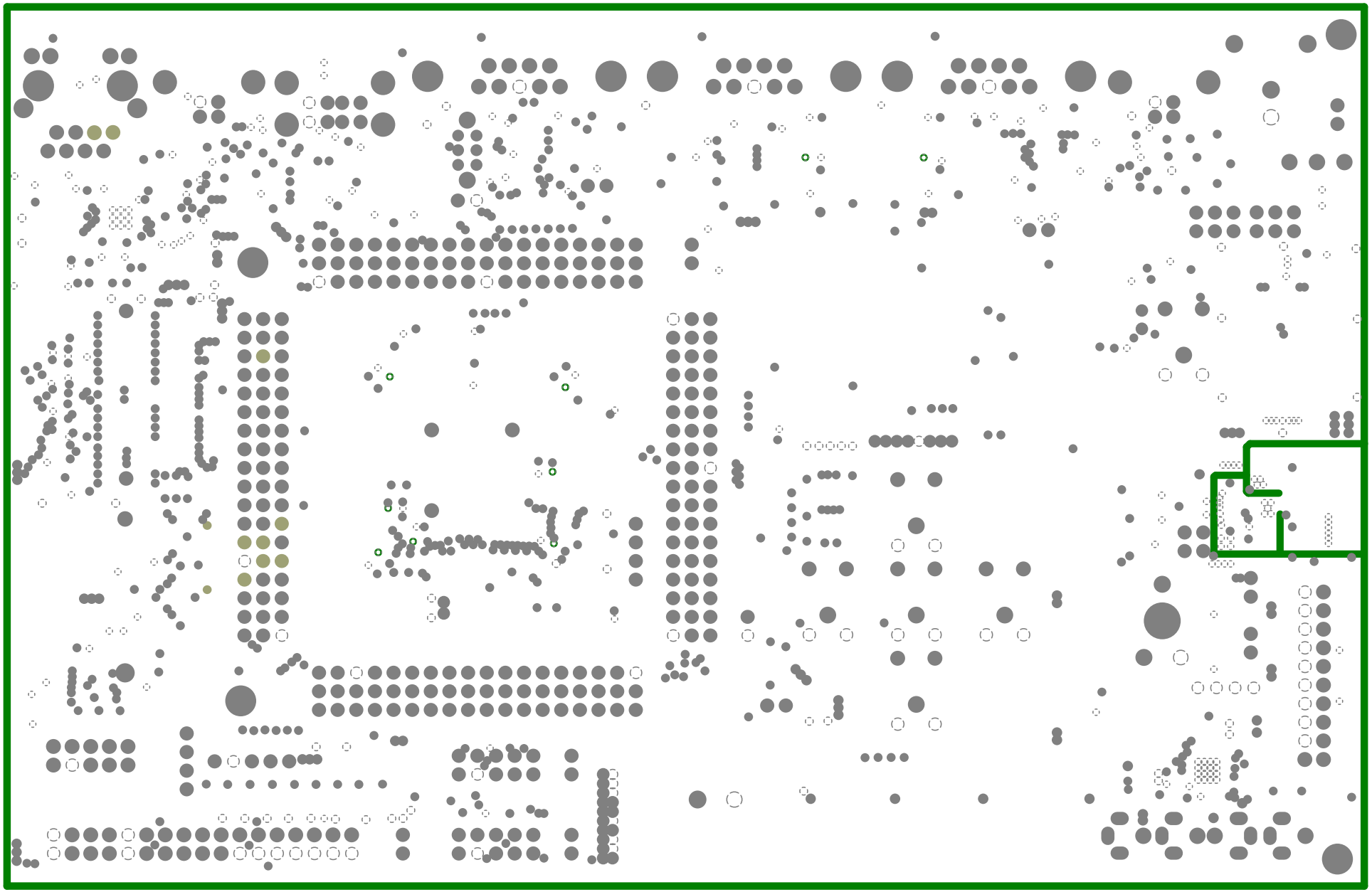

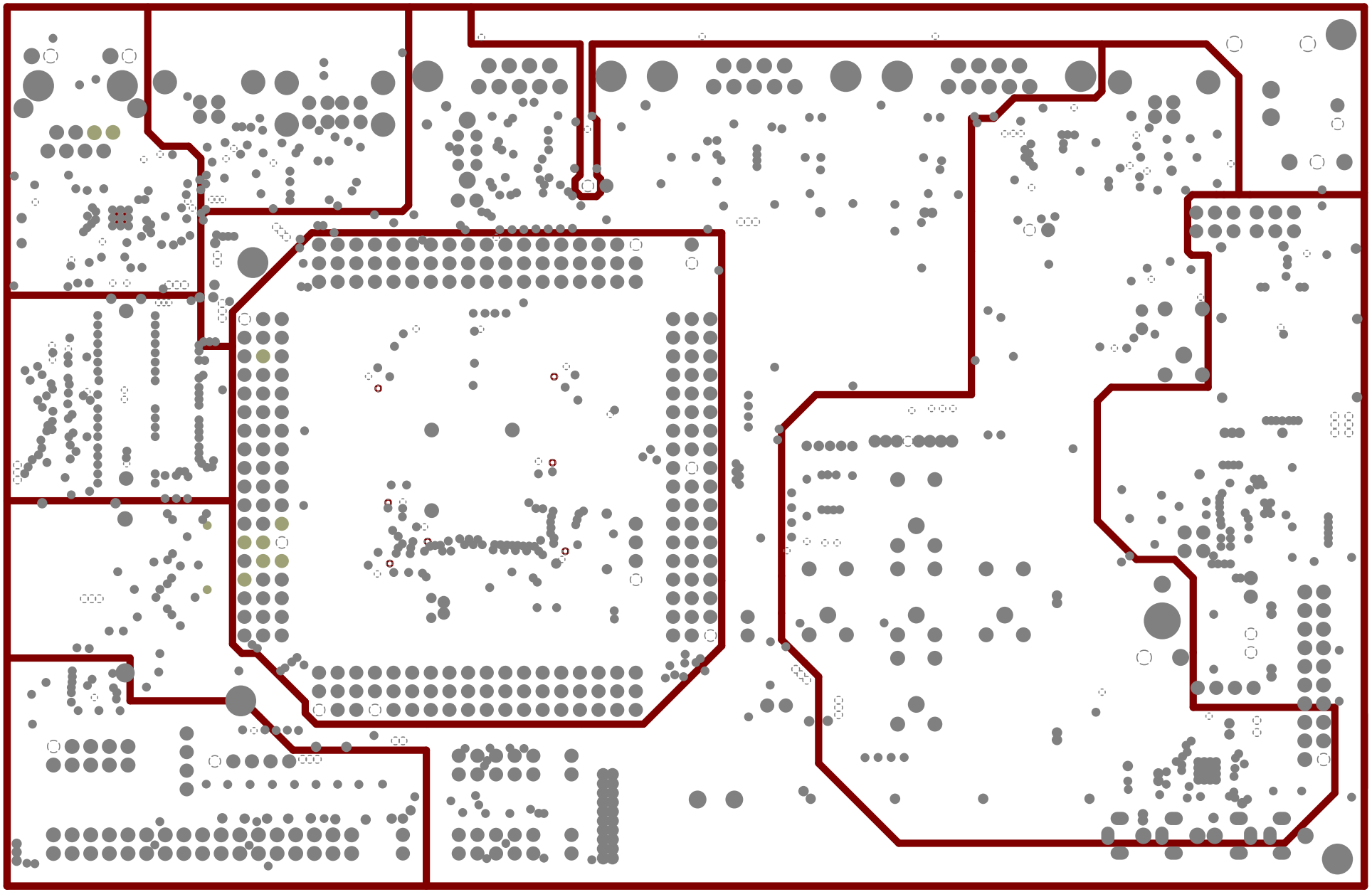

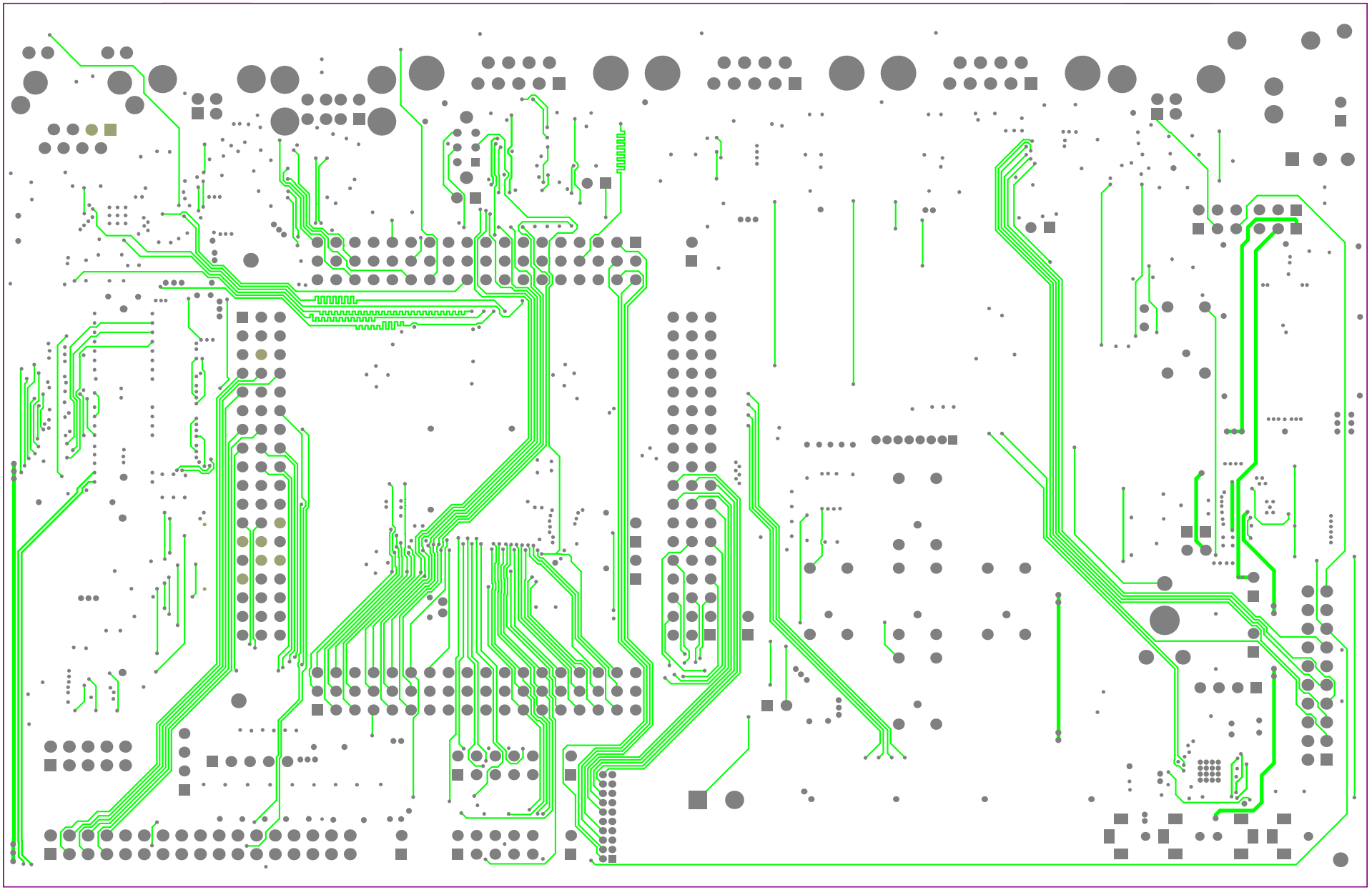

DEBUG
CAN0
CAN1
CAN2(FD)
Host
USB Device
ETH

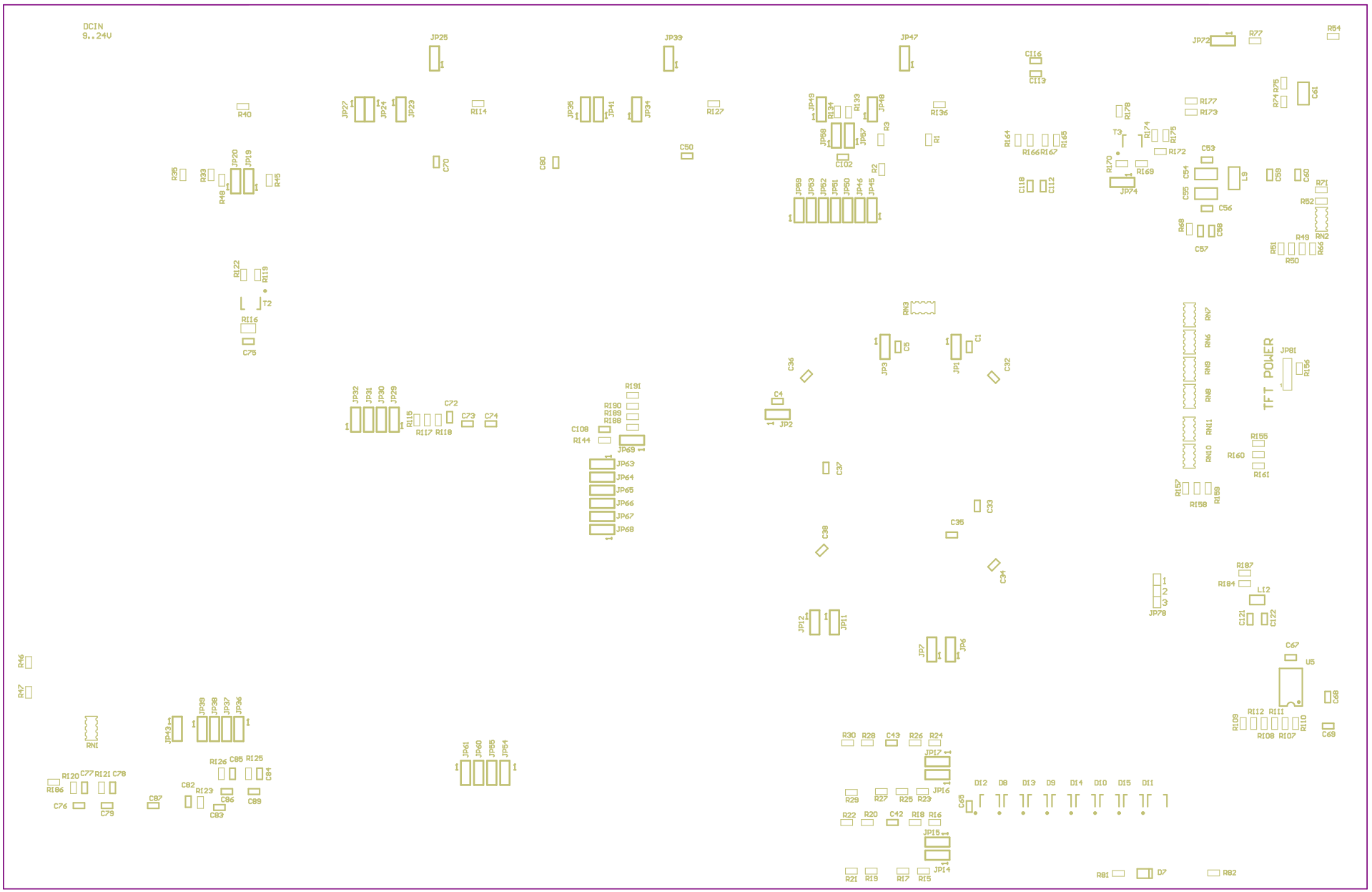
DCIN
9..24V
TFT POWER