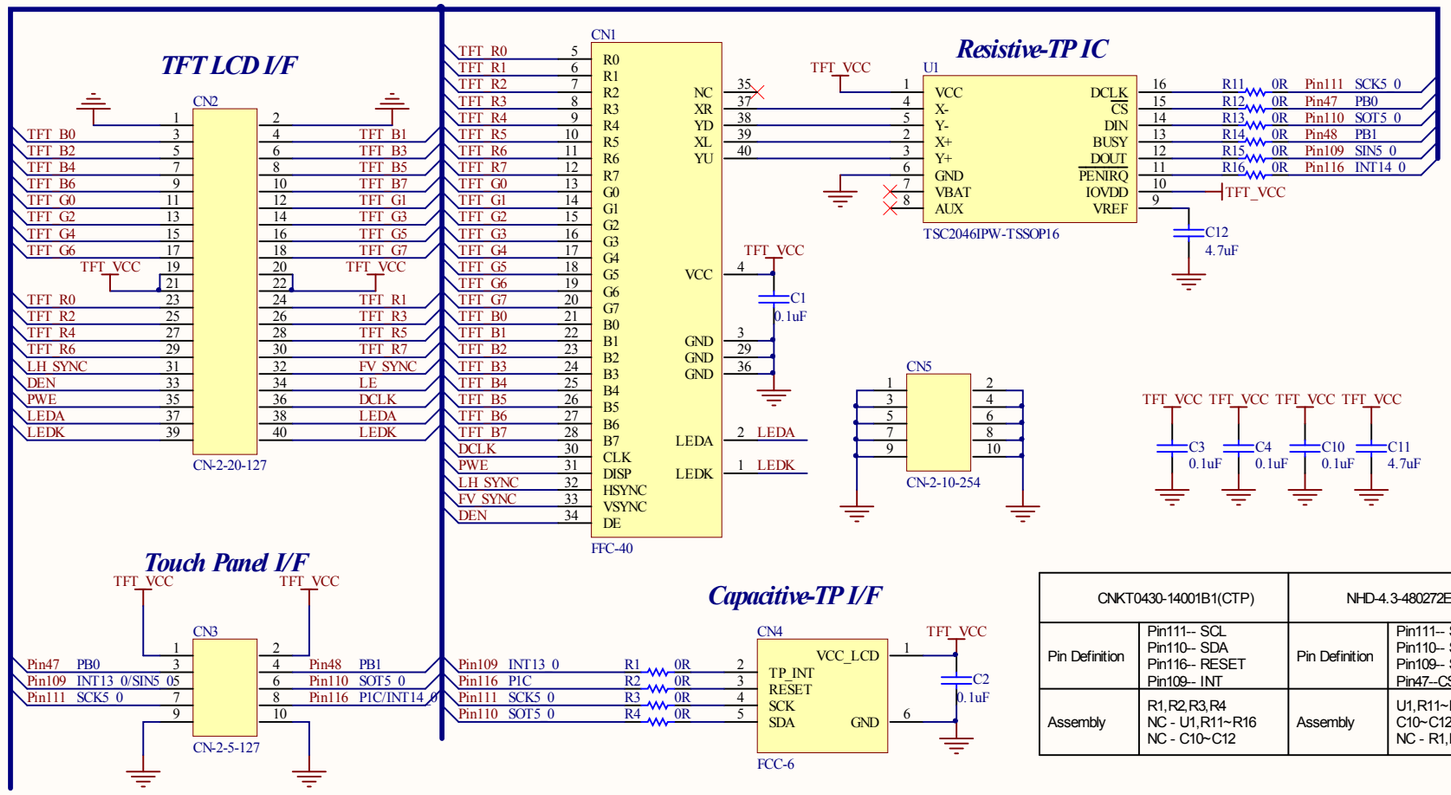

CNKT0430-14001B1(CTP)		NHD-4.3-480272EF-ATXL-T(RTP)	
Pin Definition	Pin111-- SCL Pin110-- SDA Pin116-- RESET Pin109-- INT	Pin Definition	Pin111-- SCK Pin116--INT Pin110-- SOT Pin48--BUSY Pin109-- SIN Pin47--CS
Assembly	R1,R2,R3,R4 NC - U1,R11~R16 NC - C10~C12	Assembly	U1,R11~R16 C10~C12 NC - R1,R2,R3,R4

Spansion Inc. Drawn by : KL		
Title	SK-FM4-176L-S6E2DH-TFT	
Size A2	Document Number	Rev v11
Date: Friday, Nov,21,2014		Sheet 1 of 1