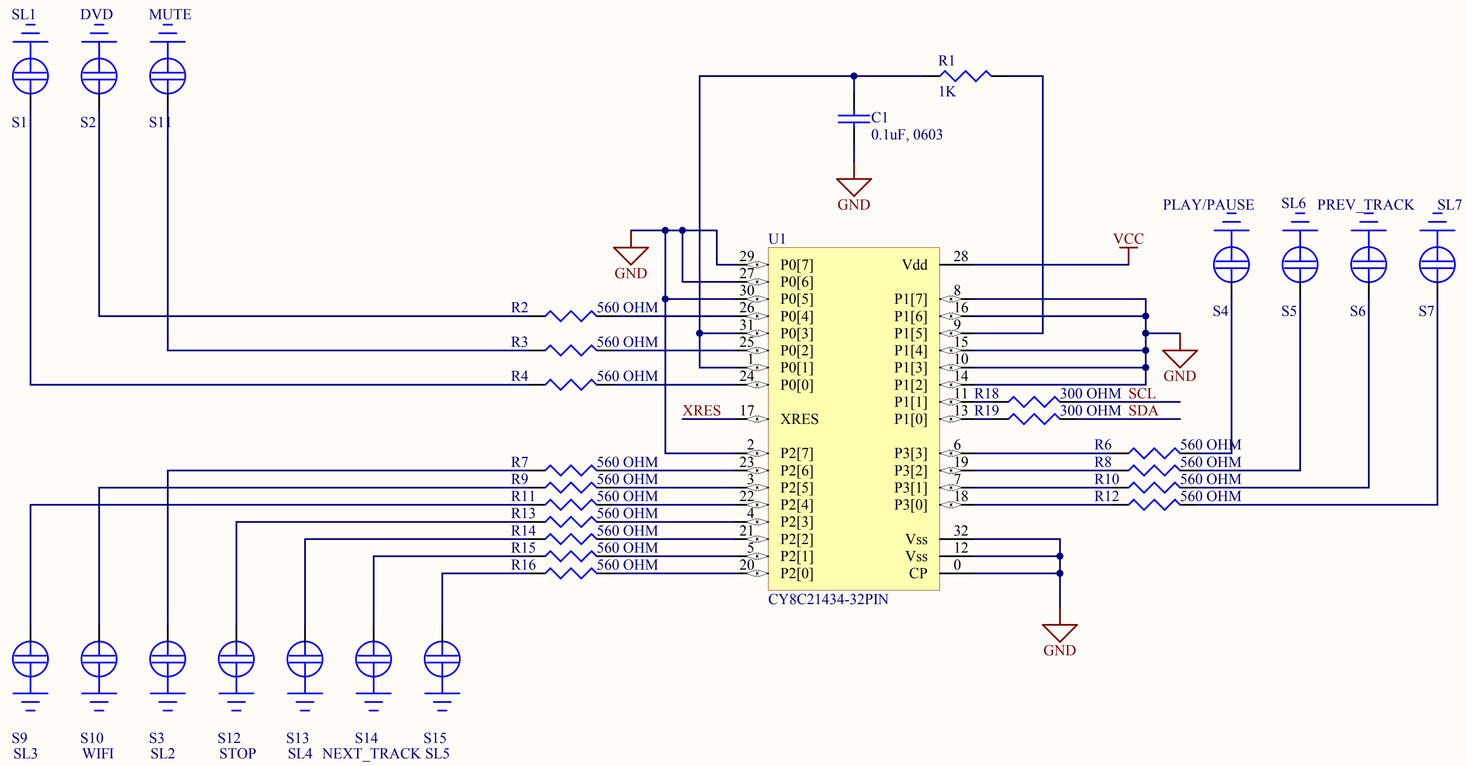

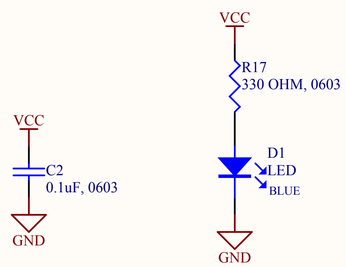

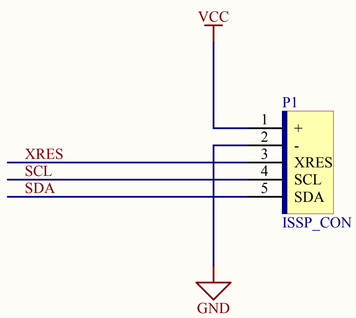

TEST POINTS

BYPASS

POWER APPLIED

PROGRAMMING & I2C

Copyright 2008 Cypress Semiconductor Corporation.

This software is owned by Cypress Semiconductor Corporation (Cypress) and is protected by and subject to worldwide patent protection (United States and foreign), United States copyright laws and international treaty provisions. Therefore, unless otherwise specified in a separate license agreement between you and Cypress, this software must be treated like any other copyrighted material. Reproduction, modification, translation, compilation, or representation of this software in any other form (e.g., paper, magnetic, optical, silicon, etc.) is prohibited without Cypress. express written permission.

Disclaimer: CYPRESS MAKES NO WARRANTY OF ANY KIND, EXPRESS OR IMPLIED, WITH REGARD TO THIS MATERIAL, INCLUDING, BUT NOT LIMITED TO, THE IMPLIED WARRANTIES OF MERCHANTABILITY AND FITNESS FOR A PARTICULAR PURPOSE. Cypress reserves the right to make changes without further notice to the materials described herein. Cypress does not assume any liability arising out of the application or use of any product or circuit described herein. Cypress does not authorize its products for use as critical components in life-support systems where a malfunction or failure may reasonably be expected to result in significant injury to the user. The inclusion of Cypress. product in a life-support systems application implies that the manufacturer assumes all risk of such use and in doing so indemnifies Cypress against all charges.

Use of this software may be limited by and subject to the applicable Cypress software license agreement.

Title	Multimedia Board dec 2007	
Size: B	Number	Revision
Date: 1/14/2008	Sheet of	
File: C:\Documents and Settings\..\Multimedia Board.sch	Drawn By:	