# DRIVE CARD XMC1300 V1.1

KIT_XMC1300_DC_V1

[1] Contents
[2] XMC1300, Power Supply, Power Board Connector, Hall & Encoder Interfaces
[3] On-board Debugger, Isolation

Fiducials

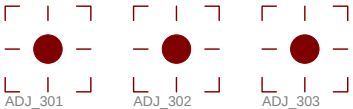


V1.1 / 28.01.2014 / AR

Legal Disclaimer

The information given in this document shall in no event be regarded as a guarantee of conditions or characteristics. With respect to any examples or hints given herein, any typical values stated herein and/or any information regarding the application of the device, Infineon Technologies hereby disclaims any and all warranties and liabilities of any kind, including without limitation, warranties of non-infringement of intellectual property rights of any third party.

| | |
|---|---|
| 2014/05 | |
| KIT_XMC1300_DC_V1 | |
| 28/1/2014 16:09:13 | |
| Sheet: 1/3 | |

## XMC1300 CORTEX-M0 Microcontroller in TSSOP38 Package

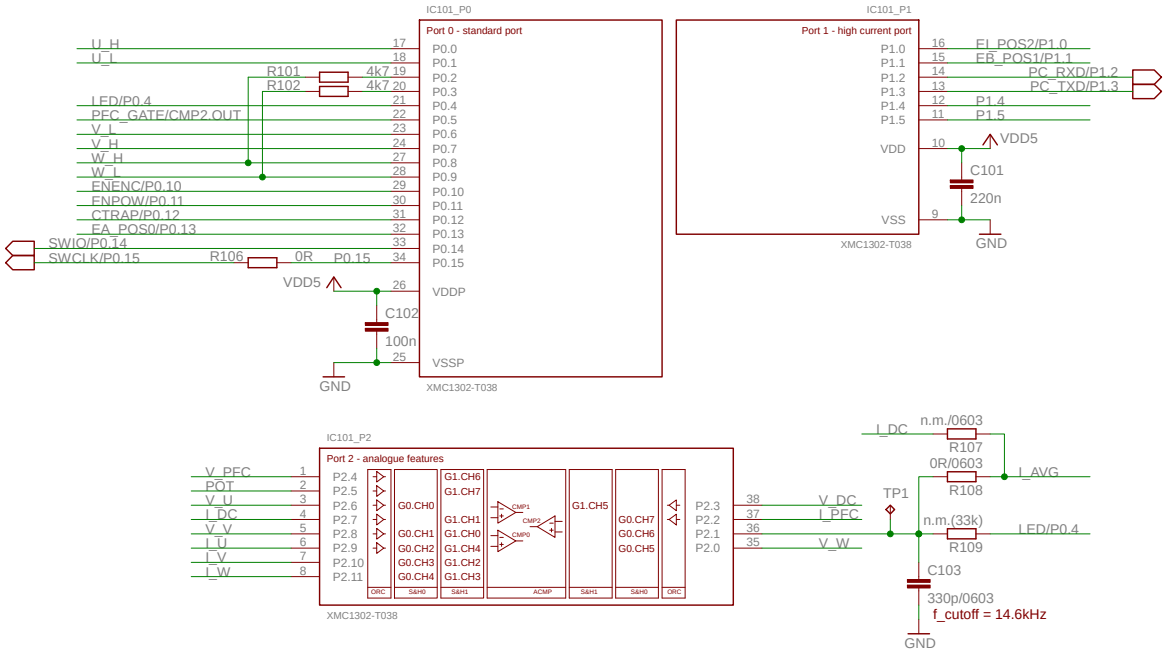


## Power Supply LED

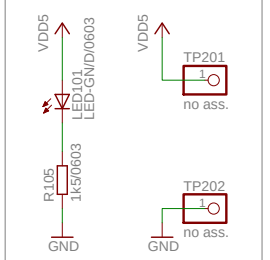


## LED at P0.4

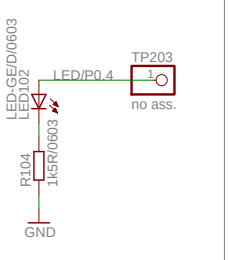


## POTI

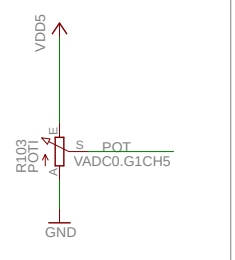


## HALL SENSOR CONNECTOR

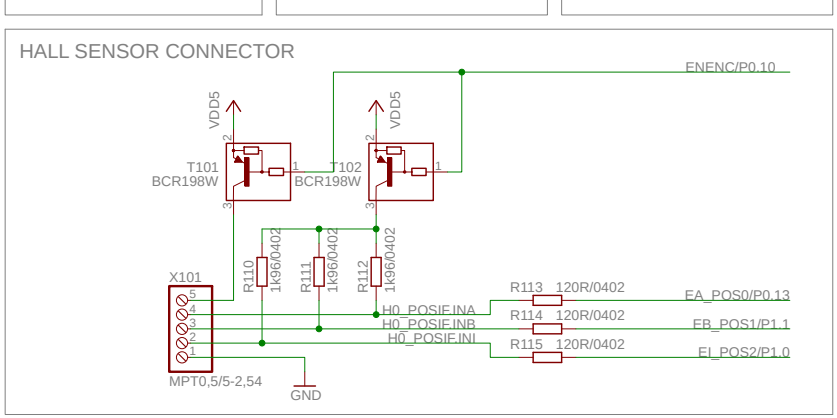


## Power Board Connector

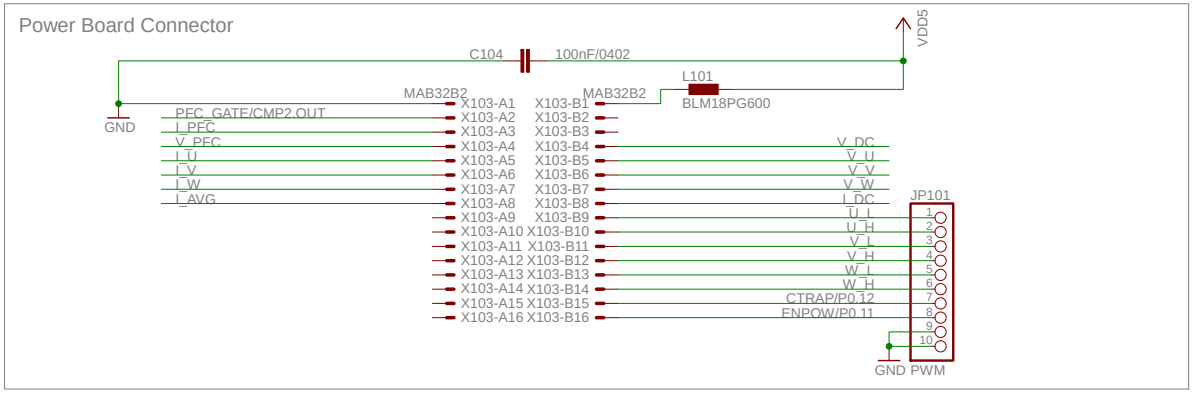


## ENCODER LINE DRIVER AND CONNECTOR

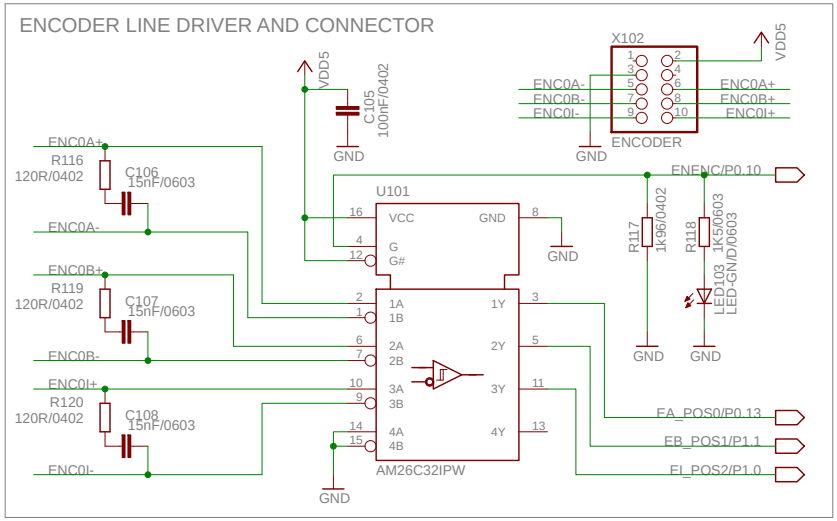


## SSC and ASC

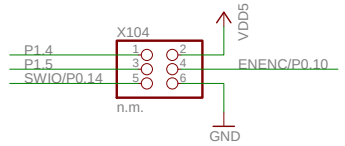


V1.1 / 28.01.2014 / AR


**Legal Disclaimer**

The information given in this document shall in no event be regarded as a guarantee of conditions or characteristics. With respect to any examples or hints given herein, any typical values stated herein and/or any information regarding the application of the device, Infineon Technologies hereby disclaims any and all warranties and liabilities of any kind, including without limitation, warranties of non-infringement of intellectual property rights of any third party.


| | |
|---|---|
| XMC1300 | |
| KIT_XMC1300_DC_V1 | |
| 28/1/2014 16:09:13 | |
| Sheet: 2/3 | |

## On-board Debugger (OBD) and UART IF

SPI Master U0C0
SWD DIR GPIO-P1.3
MISO DX0B-P1.4
MOSI DOUT0-P1.5
CLK_OUT SCLKOUT-P1.1
CS_OUT SELO0-P1.0

SPI Slave U0C1
CS_IN DX2A-P2.3
CLK_IN DX1A-P2.4
PULL Select GPIO-P0.8

ADC
AIN P14.9

UART2 (DM2) U1C0
RXD DX0A-P0.4
TXD DOUT0-P0.5
TX_ENABLE GPIO-P0.7
TXACTIVE# GPIO-P0.6

CONTROL GPIOs
RESET# GPIO-P0.3
DEBUG_LED# GPIO-P0.2
AUX_LED# GPIO-P0.1

SWD_DIR, SWD_IN, SWD_OUT, SWCLK, RXD, TXD, DEBUG_LED#, COM_LED#

U201 XMC4200_QFN48
Digital: P2.5 SWCLK_ISO, P2.4 CS, P2.3, P2.2, P2.1, P2.0; P0.8, P0.7, P0.6, P0.5 TX, P0.4 RX, P0.3, P0.2 DEBUG_LED#, P0.1 COM_LED#, P0.0; P1.5 SWD_OUT, P1.4 SWD_IN, P1.3 SWD_DIR, P1.2, P1.1 SWCLK_ISO, P1.0 CS
Analog: P14.9, P14.8 COM LED, P14.7 Level Shifter, P14.6 No RESET Pin, P14.5 UART, P14.4 SPD, P14.3 SWV, P14.0 JTAG; VAREF, VAGND
Hibernate/RTC: RTC_XTAL_2, RTC_XTAL_1, HIB_IO_0, VBAT
USB: USB_D-, USB_D+
Supply: XTAL2, XTAL1, PORST#, TCK, TMS, VSS, EPAD, VDDP2, VDDP1, VDDP, VDDC1, VDDC

VISO3.3, VISO5, VUSB5, GNDISO
R201 680R/0603, R202 680R/0603, R203 1k5/0603
LED201 LED-GN/D/0603, LED202 LED-GN/D/0603, LED203 LED-RT/D/0603
C201 100nF/0402
Q201 12MHZ/S/3.2X2.5, C206 15pF/0402, C207 15pF/0402
R205 510R/0603, R204 33R/0402, R206 33R/0402, R210 10k/0402, R207 4k7/0402, R208 10k/0402, R209 1M/0402
V202 BAS3010A-03W, V203 ESD8V0L2B-03L
L201 BLM18PG600, X202C ZX62-AB-5PA
C208 100nF/0402, C210 100nF/0402, C211 100nF/0402, C212 4.7uF/X7R/0603, C213 100nF/0402, C214 100nF/0402, C215 100nF/0402, C216 10uF/10V/0805
X205 no ass.
OBD_OFF#, OBD_TCK, OBD_TMS

Segger J-Link OBD
The board includes an On-Board-Debugger (OBD) using a XMC microcontroller plus the J-link SW from Segger. The OBD may be designed as break-out or non break-out option. In both cases, the license usage of this OBD with the J-Link SW is limited to the delivered board.

## OBD Power Supply LED

VISO5, LED201 LED-GN/D/0603, R203 1k5/0603, GNDISO

## Debug and UART Interface

X201 DriveMonitor2
TMS, TDO, NC1, TDI, TRST, TCLK, BRKIN, NC2, VDDP, GND1, GND2, RESET, BRKOUT, GND3, NC3, NC4
SWD_DIR5, SWD_IN5, PC_RXD5, SWD_OUT5, SWCLK5
V201 BAS3010A-03W, VISO5, OBD_OFF#, PC_TXD5, GNDISO

## OBD 3.3V Power Supply

U202 IFX1763_PADNOP
IN, EN, GND, GND, GND, OUT, SENSE/ADJ, BYP, EXP
VUSB5, VISO3.3
C202 10nF/0402, C203 10uF/10V/0805, C204 10uF/10V/0805, C205 100nF/0402

## OBD Isolation

U204 Si8462BB-B-IS1
U203 74LVC1G126GW
C209 1uF/0402, C217 1uF/0402
R215 0R/0402, R211 4k7/0402, R212 n.m./0402
SWCLK5, SWD_DIR5, SWD_OUT5, PC_TXD5, PC_RXD5, SWD_IN5
SWCLK/P0.15, SWIO/P0.14, PC_TXD/P1.3, PC_RXD/P1.2
VDD5, GND, GNDISO

## OBD Voltage Level Shifter

U205, U206, U207 SN74LVC2T45DCT
VCCB, VCCA, B1, B2, GND, A1, A2, DIR
SWD_DIR, SWD_OUT, SWD_DIR5, SWD_OUT5
SWCLK_ISO, TX, SWCLK5, PC_TXD5
RX, SWD_IN, PC_RXD5, SWD_IN5
T202 BCR148W, T201 BSS223PW, R213 10k/0402, R214 1k/0402, C218 100nF/0402
OBD_OFF#, VISO3.3, VISO5, GNDISO

## OBD Debug Connector

VDD5, GND
debug
PC_RXD/P1.2/2.5A, PC_TXD/P1.3/2.5A, SWIO/P0.14/2.1E, SWCLK/P0.15/2.1B
X203, X204

Isolation

V1.1 / 28.01.2014 / AR

Legal Disclaimer
The information given in this document shall in no event be regarded as a guarantee of conditions or characteristics. With respect to any examples or hints given herein, any typical values stated herein and/or any information regarding the application of the device, Infineon Technologies hereby disclaims any and all warranties and liabilities of any kind, including without limitation, warranties of non-infringement of intellectual property rights of any third party.

| | |
|---|---|
| OBD | |
| KIT_XMC1300_DC_V1 | |
| 28/1/2014 16:09:13 | |
| Sheet: 3/3 | |