XMC4000 Application Kit
General Purpose Motor Drive Card

MOT_GPDLV-V2

[1] Contents
[2] Satellite Connector, Power Supply
[3] Gate Driver, Power Stage, Shunt Amplifier
[4] Resolver, Encoder

Fiducials

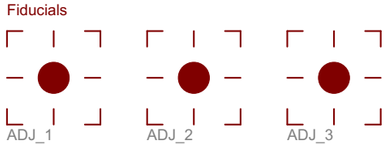

V2 / 08.05.2012 / Ma
V2-2 / 17.09.2012 / Ma
V2-3 / 11.10.2012 / Ma

Legal Disclaimer

The information given in this document shall in no event be regarded as a guarantee of conditions or characteristics. With respect to any examples or hints given herein, any typical values stated herein and/or any information regarding the application of the device, Infineon Technologies hereby disclaims any and all warranties and liabilities of any kind, including without limitation, warranties of non-infringement of intellectual property rights of any third party.

Contents
MOT_GPDLV-V2
11.12.2014 11:07:01
Sheet: 1/4

ACT-BOARD CONNECTOR

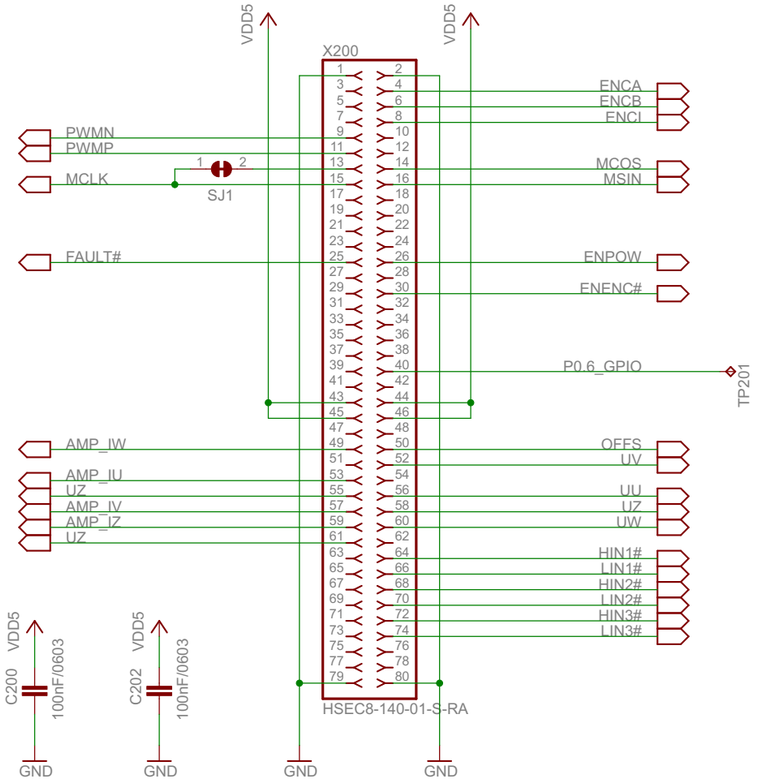

+5V POWER SUPPLY

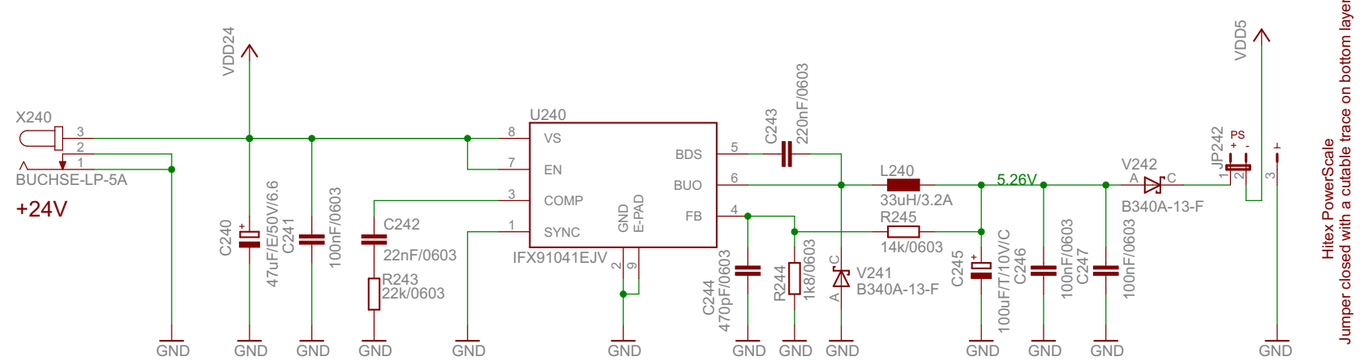

+5V ANALOG POWER SUPPLY

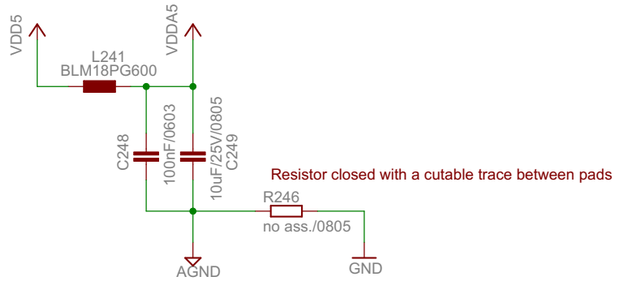

POWER LED

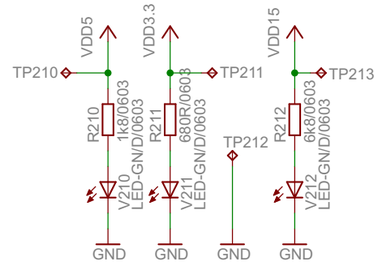

+3V3 POWER SUPPLY

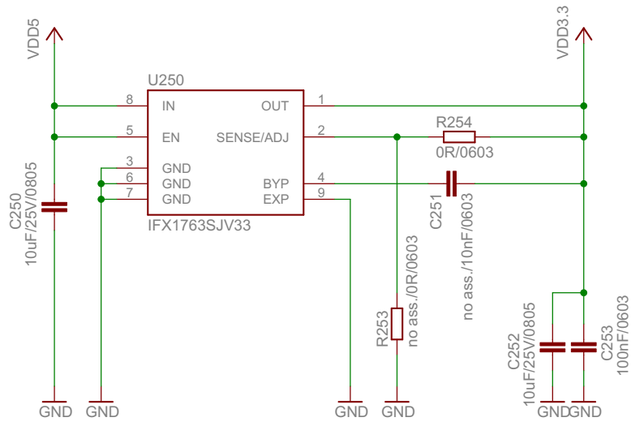

+15V POWER SUPPLY

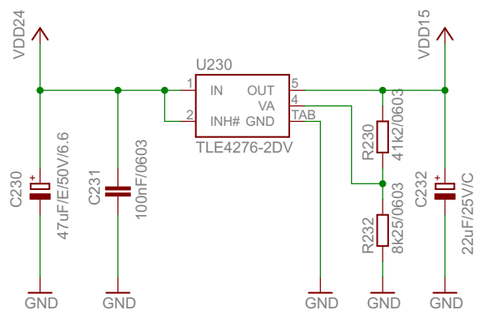

V2 / 08.05.2012 / Ma

Legal Disclaimer

The information given in this document shall in no event be regarded as a guarantee of conditions or characteristics. With respect to any examples or hints given herein, any typical values stated herein and/or any information regarding the application of the device, Infineon Technologies hereby disclaims any and all warranties and liabilities of any kind, including without limitation, warranties of non-infringement of intellectual property rights of any third party.

Satellite Connector, Power	
MOT_GPDLV-V2	
11.12.2014 11:07:01	
Sheet: 2/4	

GATE DRIVER AND ISOLATION

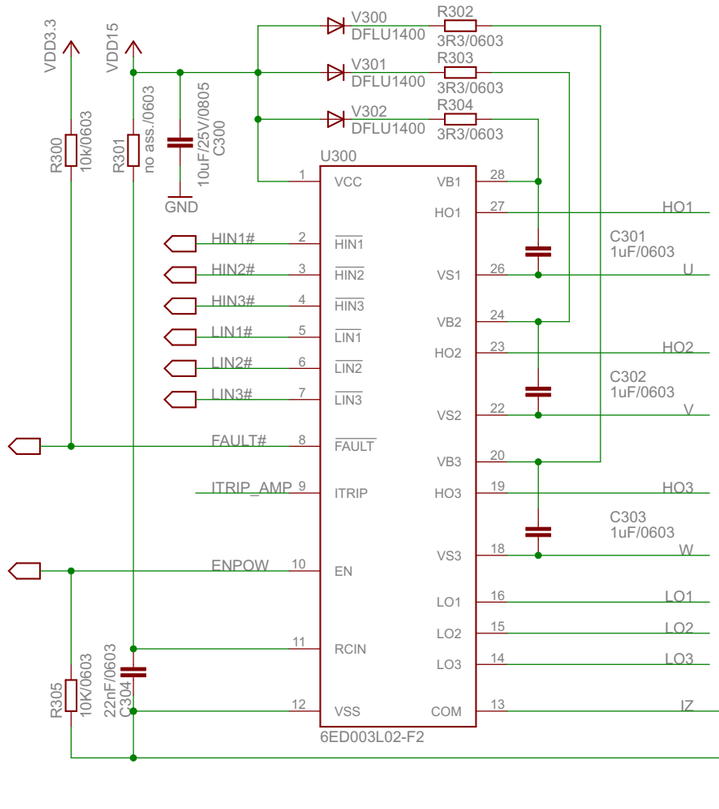

POWER STAGE AND SHUNTS

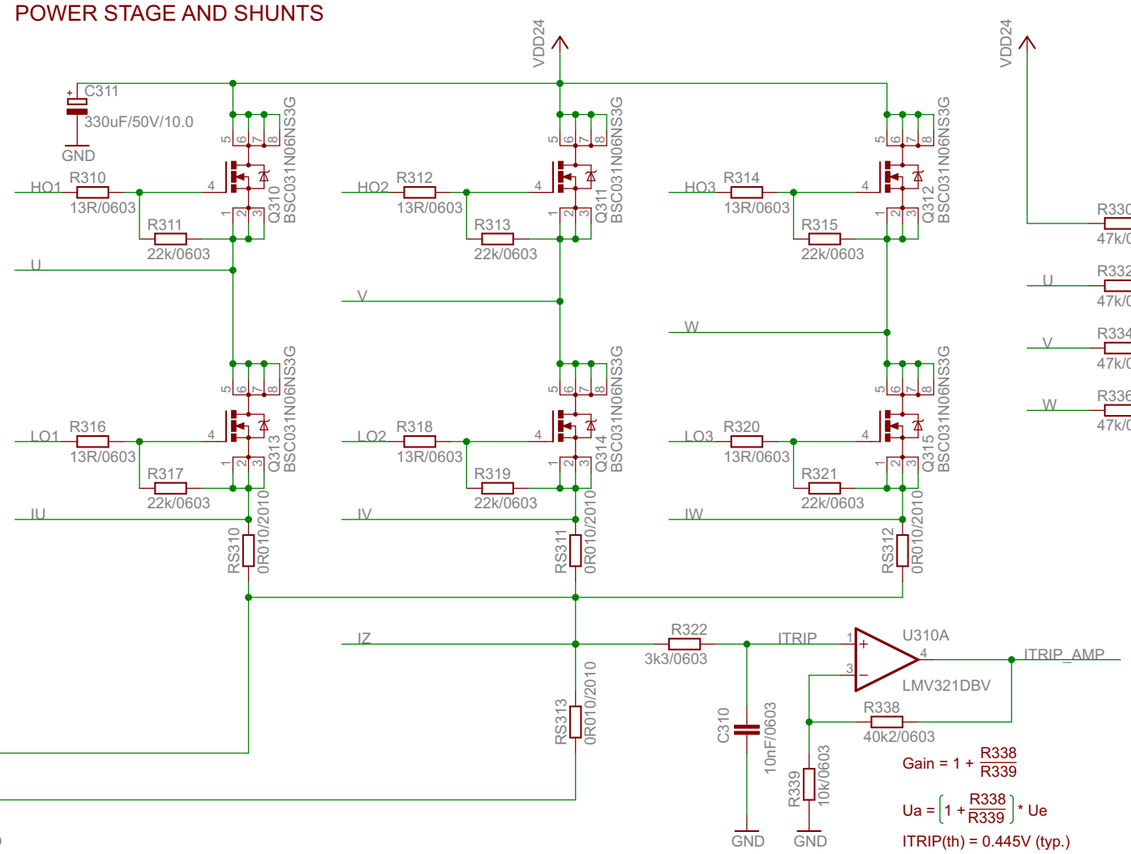

SHUNT AMPLIFIER

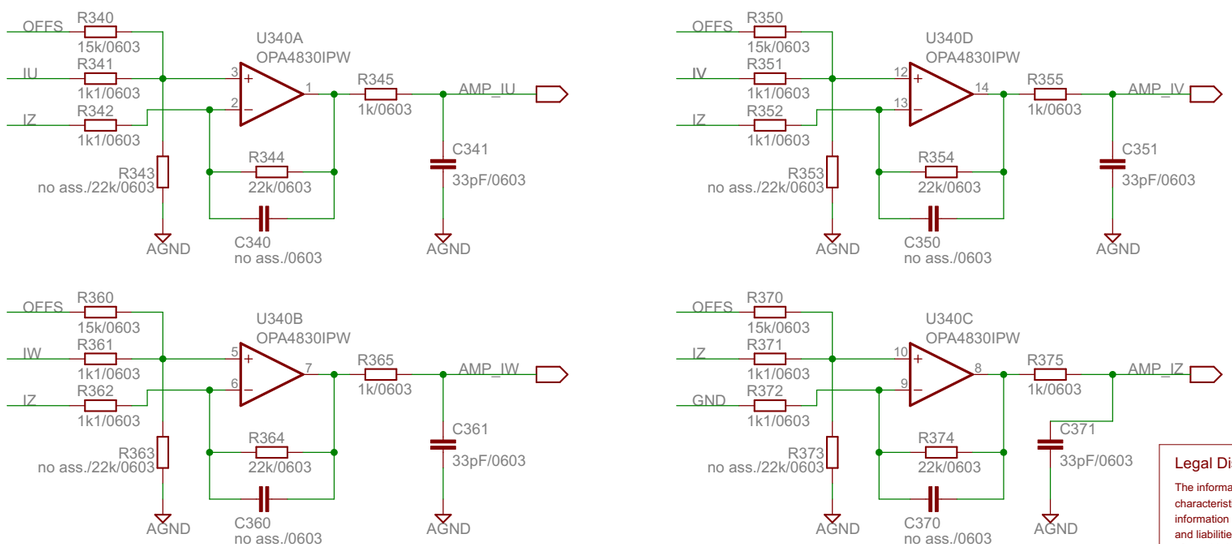

MOTOR CONNECTOR

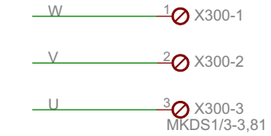

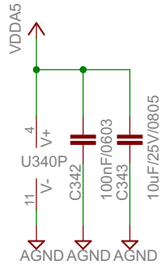

V2 / 08.05.2012 / Ma
V2-2 / 17.09.2012 / Ma
V2-3 / 11.10.2012 / Ma

Legal Disclaimer

The information given in this document shall in no event be regarded as a guarantee of conditions or characteristics. With respect to any examples or hints given herein, any typical values stated herein and/or any information regarding the application of the device, Infineon Technologies hereby disclaims any and all warranties and liabilities of any kind, including without limitation, warranties of non-infringement of intellectual property rights of any third party.

Driver, Power Stage, Shunt Amp	
MOT_GPDLV-V2	
11.12.2014 11:07:01	
Sheet: 3/4	

RESOLVER CONNECTOR

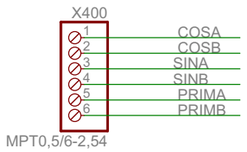

RESOLVER SECONDARY SIGNAL READER

RESOLVER PRIMARY COIL EXCITATION

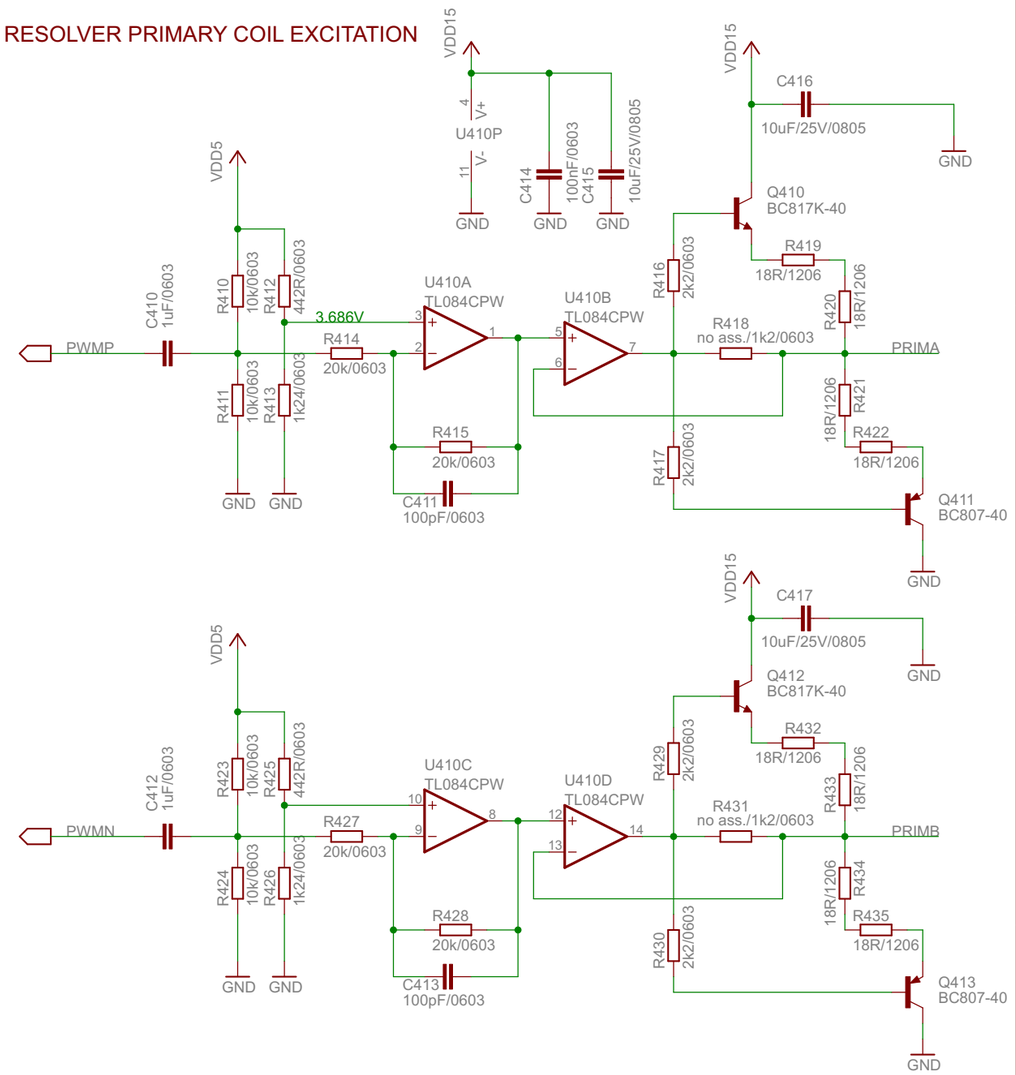

ENCODER CONNECTOR

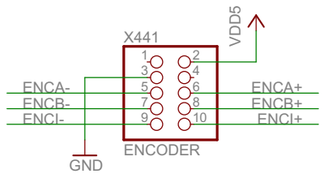

ENCODER LINE RECEIVER

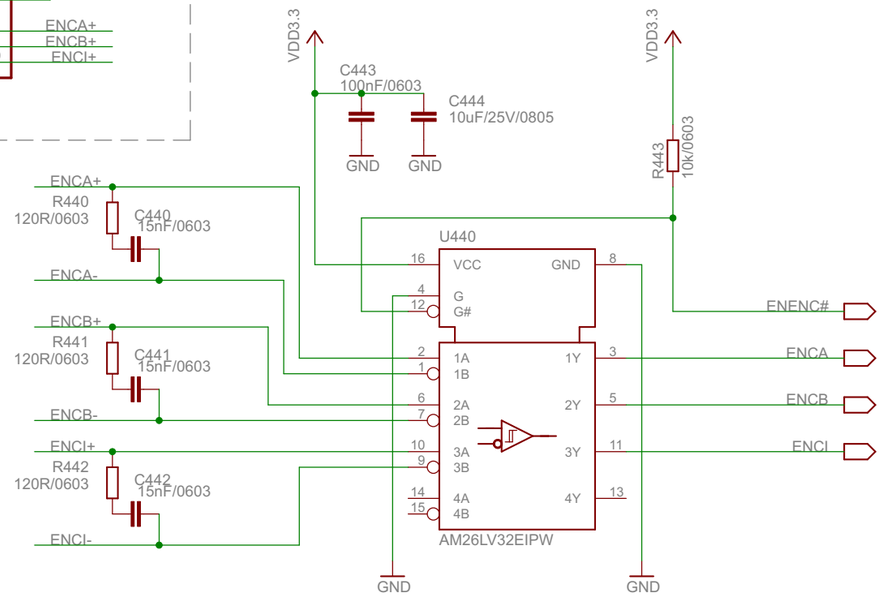

HALL SENSOR CONNECTOR

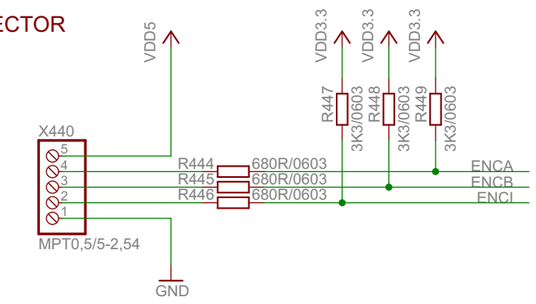

V2 / 08.05.2012 / Ma
V2-3 / 11.10.2012 / Ma

Legal Disclaimer

The information given in this document shall in no event be regarded as a guarantee of conditions or characteristics. With respect to any examples or hints given herein, any typical values stated herein and/or any information regarding the application of the device, Infineon Technologies hereby disclaims any and all warranties and liabilities of any kind, including without limitation, warranties of non-infringement of intellectual property rights of any third party.

Resolver, Encoder	
MOT_GPDLV-V2	
11.12.2014 11:07:01	
Sheet: 4/4	