XMC4000 Kit
General Purpose Motor Drive Card

MOT_GPDLV-V2

[1] Contents
[2] Satellite Connector, Power Supply
[3] Gate Driver, Power Stage, Shunt Amplifier
[4] Resolver, Encoder

Fiducials

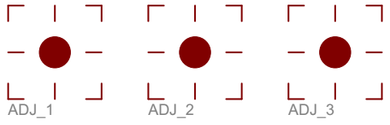

V2 / 08.05.2012 / Ma

	Contents
	MOT_GPDLV-V2
	11.09.2012 08:17:36
	Sheet: 1/4

ACT-BOARD CONNECTOR

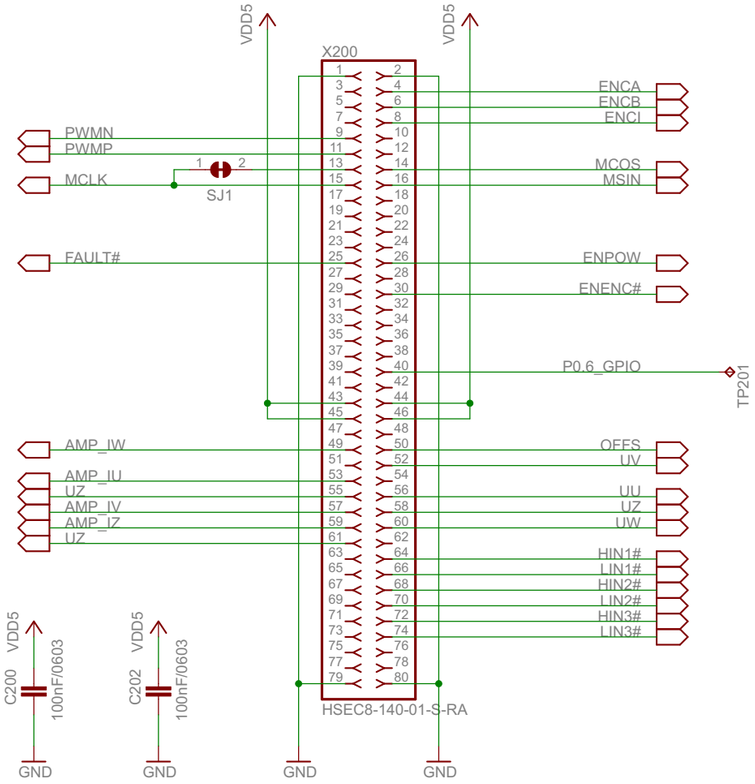

+5V POWER SUPPLY

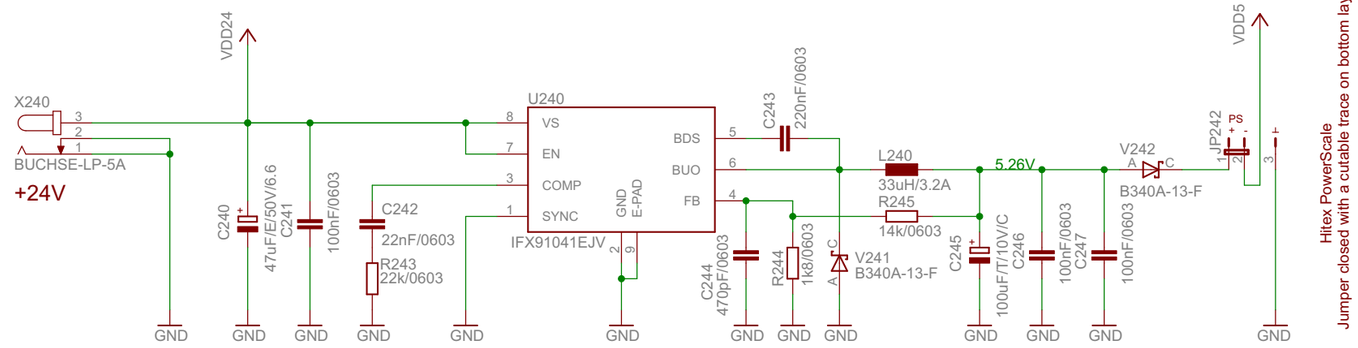

+5V ANALOG POWER SUPPLY

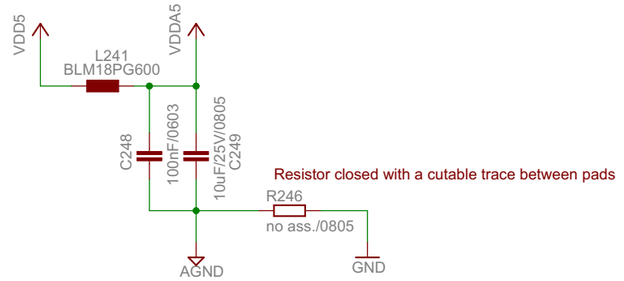

POWER LED

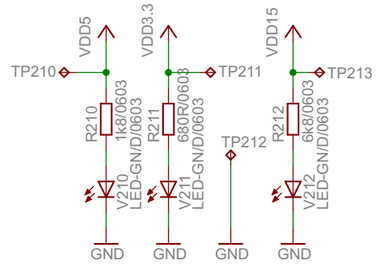

+3V3 POWER SUPPLY

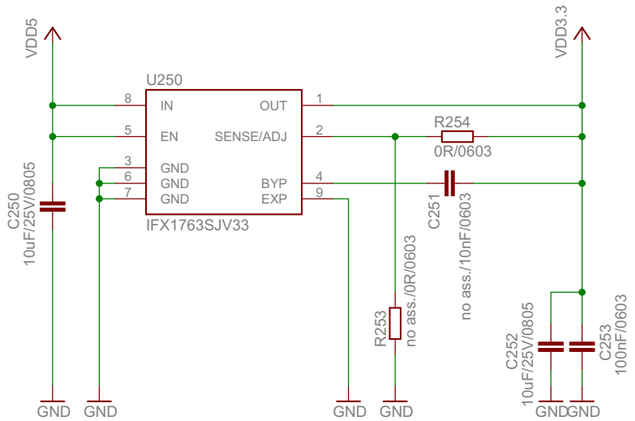

+15V POWER SUPPLY

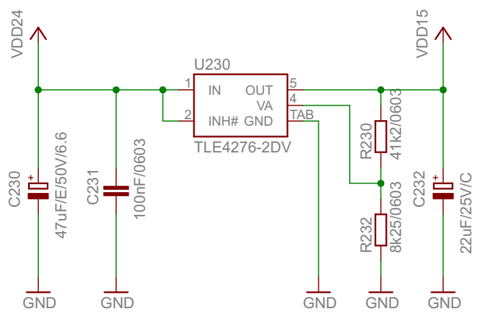

V2 / 08.05.2012 / Ma

Satellite Connector, Power	
MOT_GPDLV-V2	
11.09.2012 08:17:36	
Sheet: 2/4	

GATE DRIVER AND ISOLATION

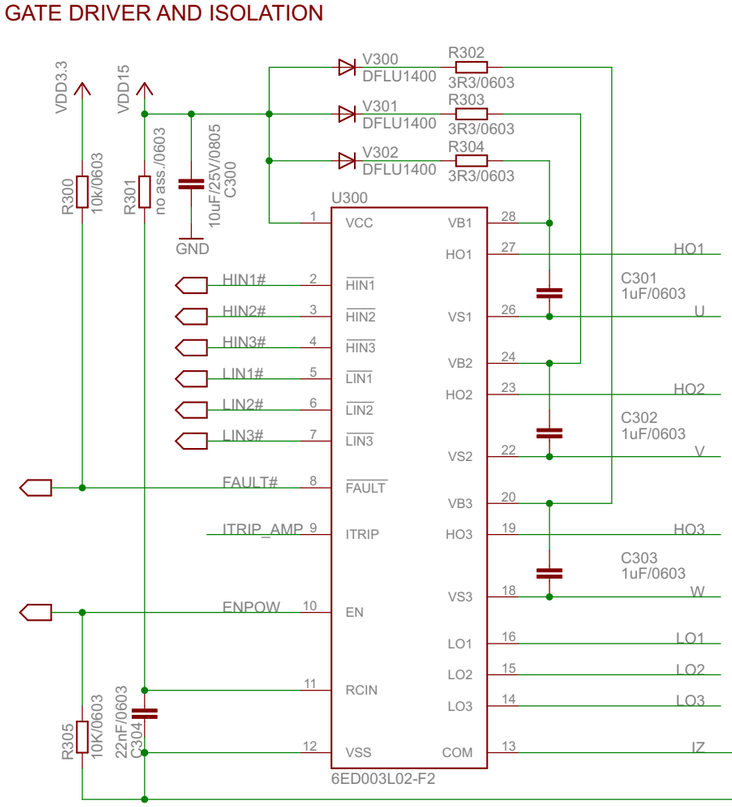

POWER STAGE AND SHUNTS

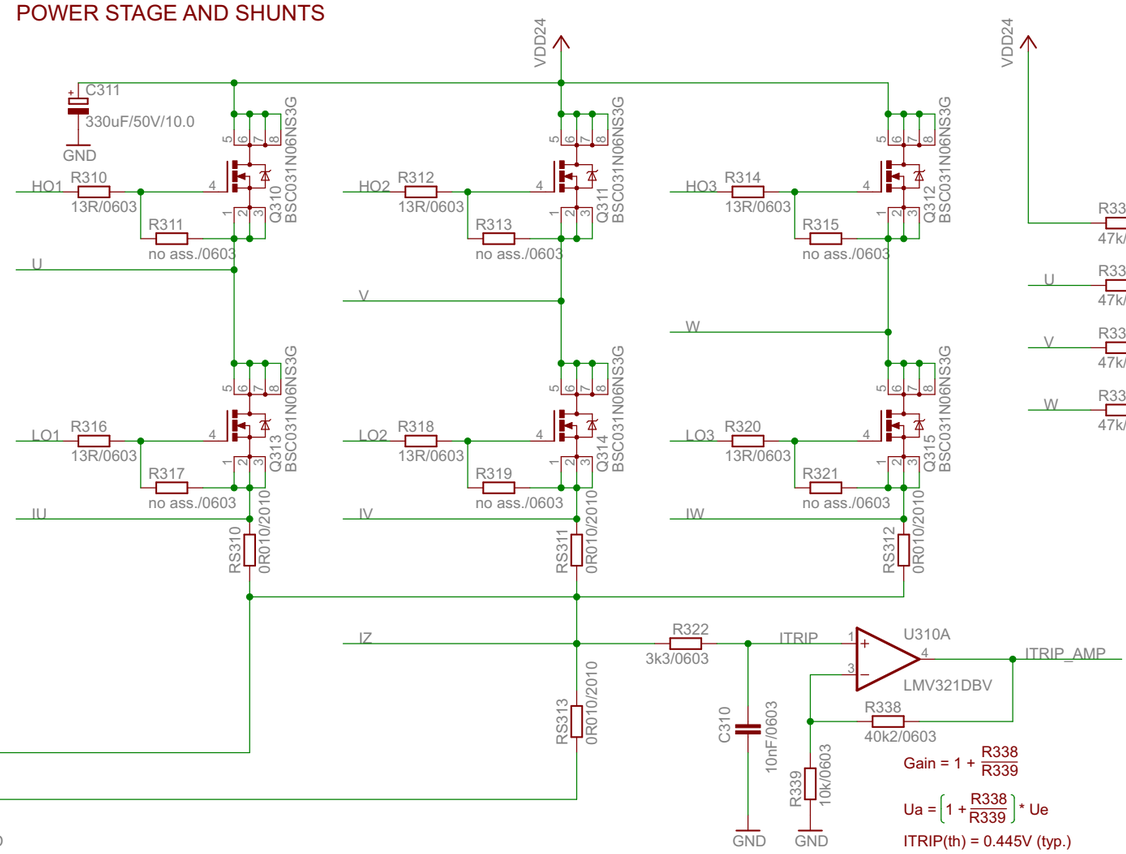

SHUNT AMPLIFIER

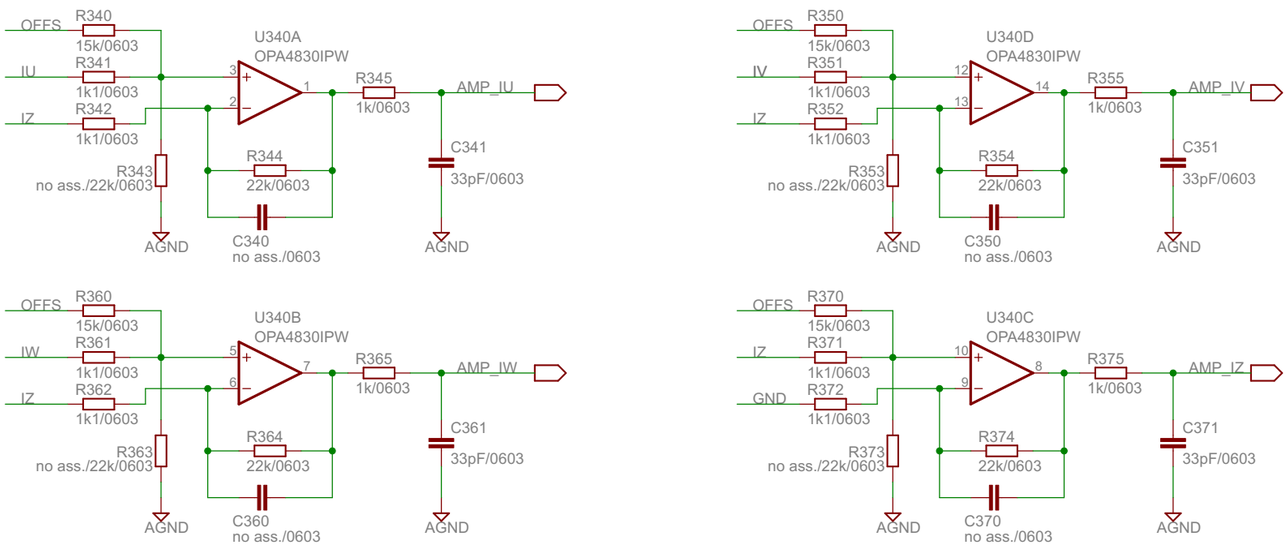

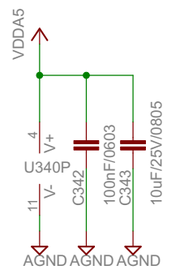

MOTOR CONNECTOR



V2 / 08.05.2012 / Ma

Driver, Power Stage, Shunt Amp	
MOT_GPDLV-V2	
11.09.2012 08:17:36	
Sheet: 3/4	

RESOLVER CONNECTOR

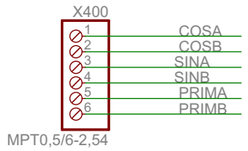

RESOLVER SECONDARY SIGNAL READER

RESOLVER PRIMARY COIL EXCITATION

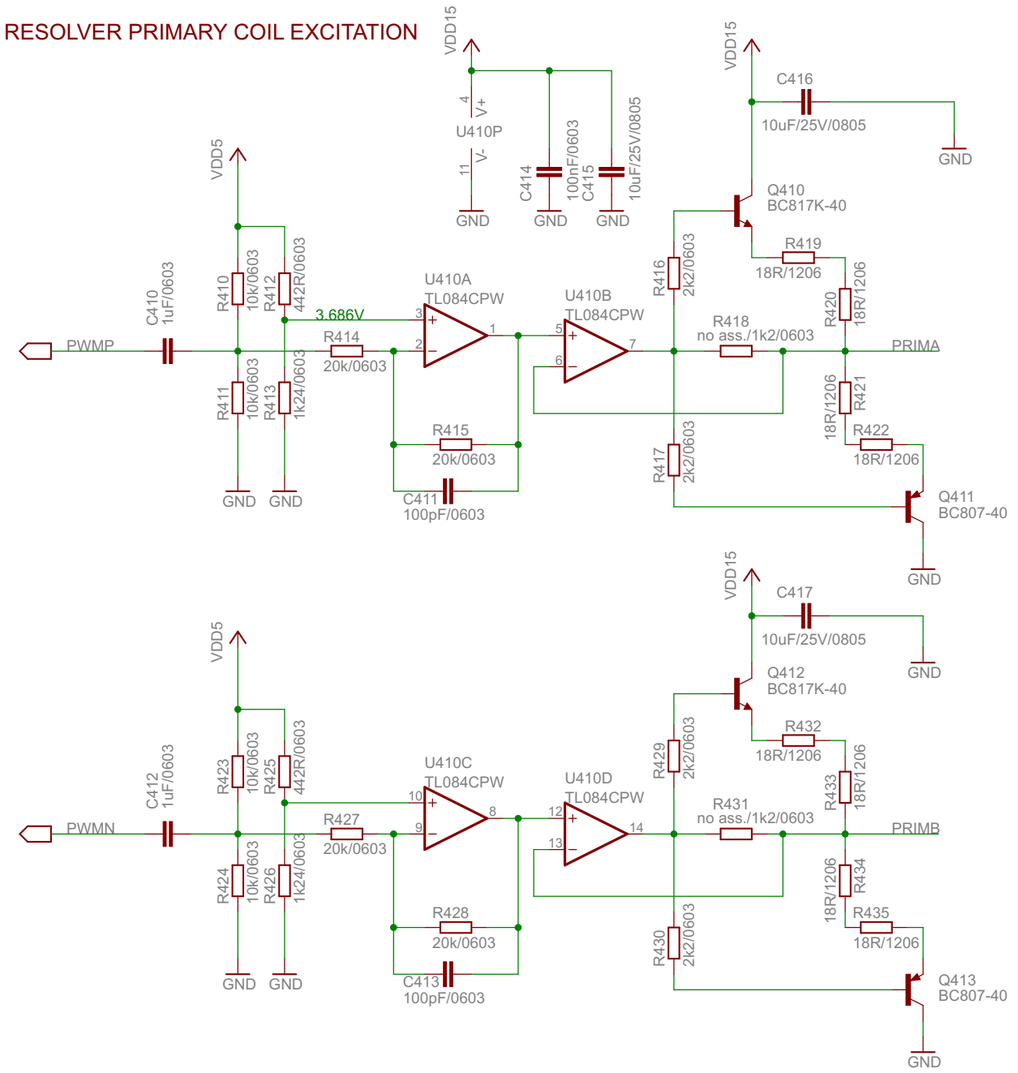

ENCODER CONNECTOR

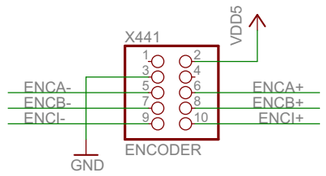

ENCODER LINE RECEIVER

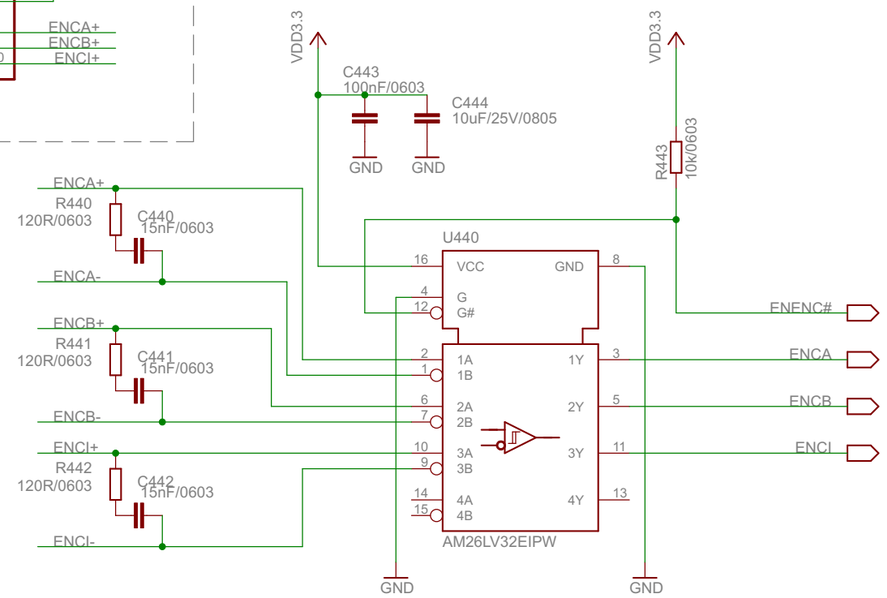

HALL SENSOR CONNECTOR

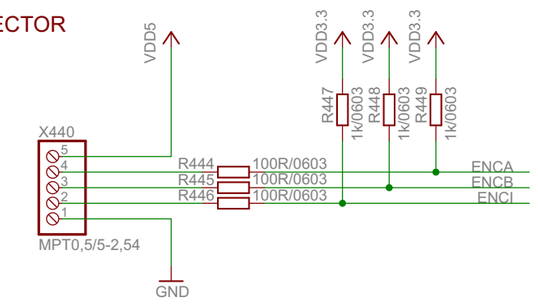

V2 / 08.05.2012 / Ma

Resolver, Encoder	
MOT_GPDLV-V2	
11.09.2012 08:17:36	
Sheet: 4/4	