XMC4000 Kit
General Purpose Drive Low Voltage

MOT_GPDLV-V2

[1] Contents
[2] Satellite Connector, Power Supply
[3] Gate Driver, Power Stage, Shunt Amplifier
[4] Resolver, Encoder

Fiducials

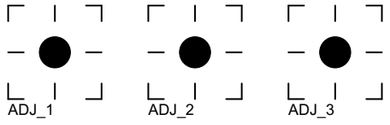

V2 / 08.05.2012 / Ma

Contents	
MOT_GPDLV-V2	
14.05.2012 09:36:51	
Sheet: 1/4	

ACT-BOARD CONNECTOR

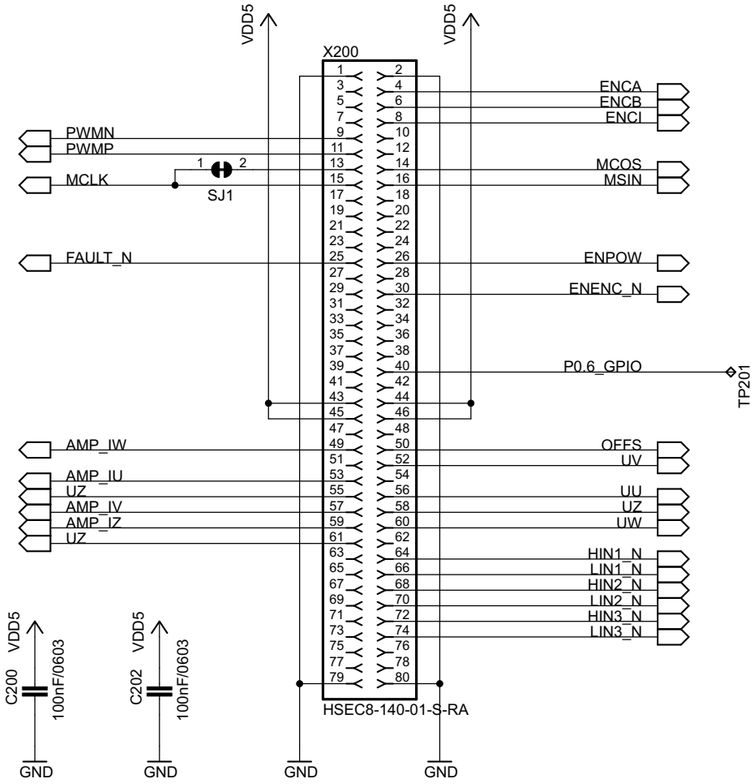

+5V POWER SUPPLY

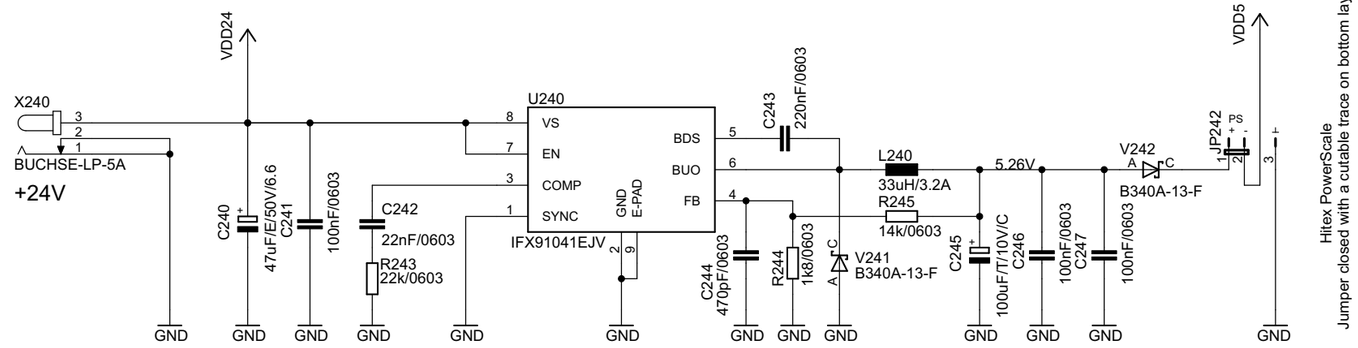

+5V ANALOG POWER SUPPLY

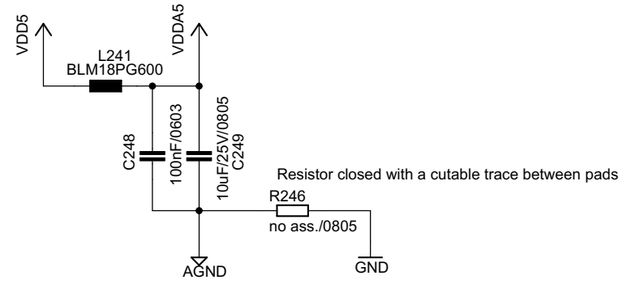

POWER LED

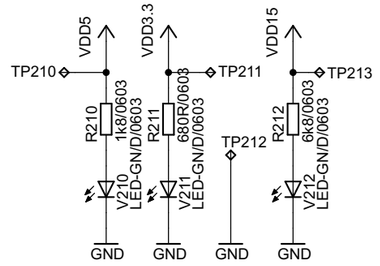

+3V3 POWER SUPPLY

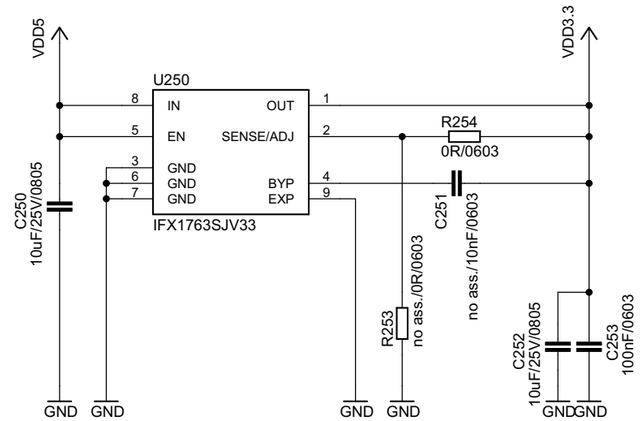

+15V POWER SUPPLY

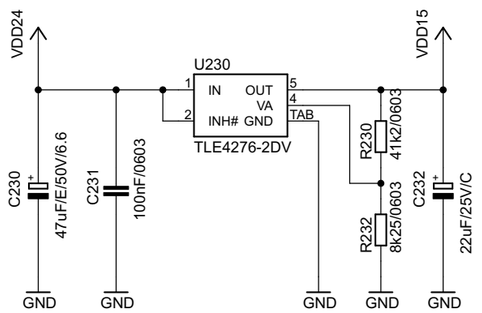

V2 / 08.05.2012 / Ma

Infineon	Satellite Connector, Power
	MOT_GPDLV-V2
	14.05.2012 09:36:51
	Sheet: 2/4

GATE DRIVER AND ISOLATION

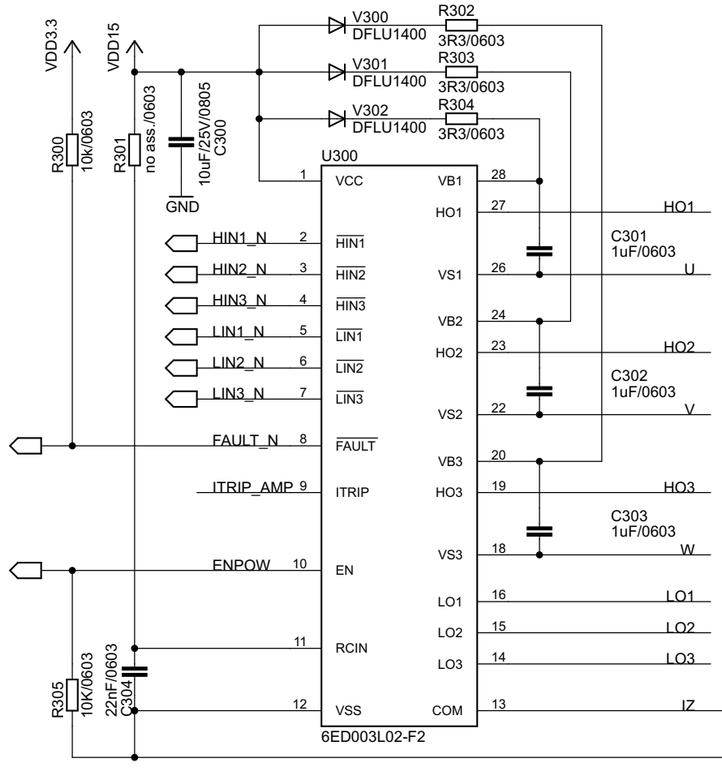

POWER STAGE AND SHUNTS

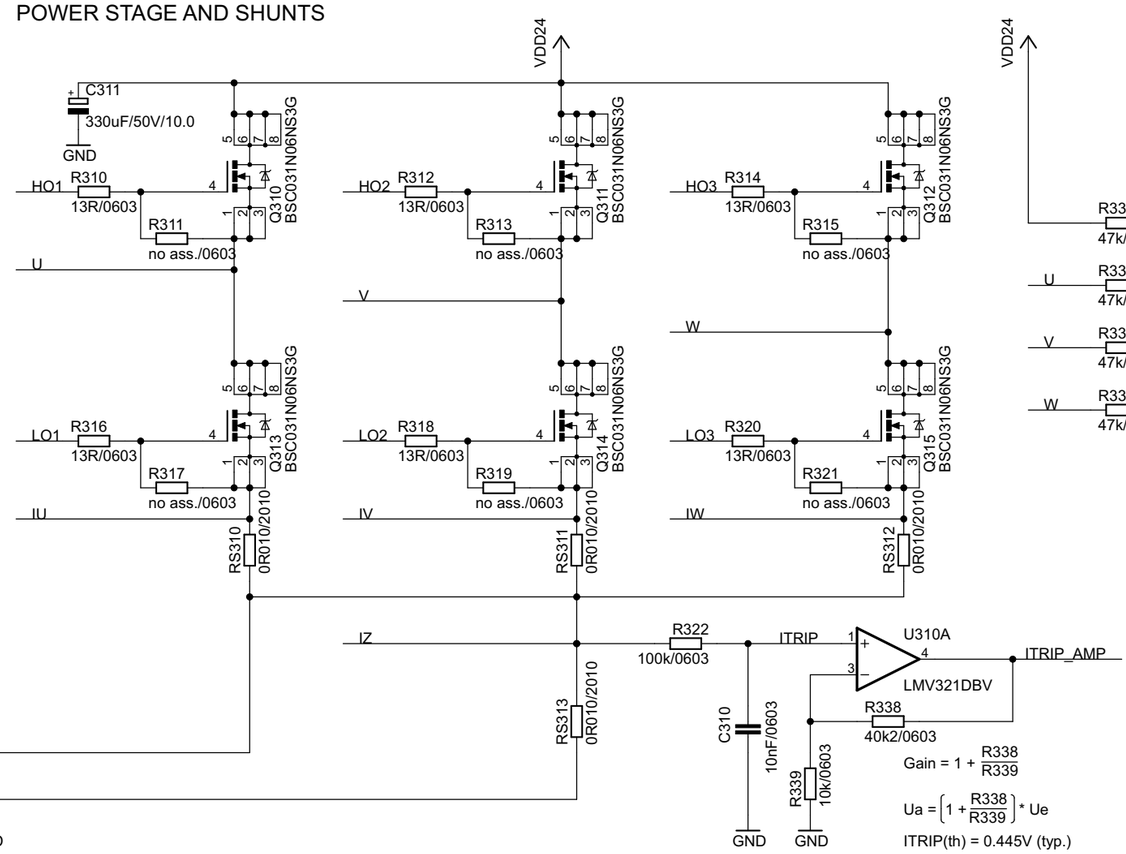

SHUNT AMPLIFIER

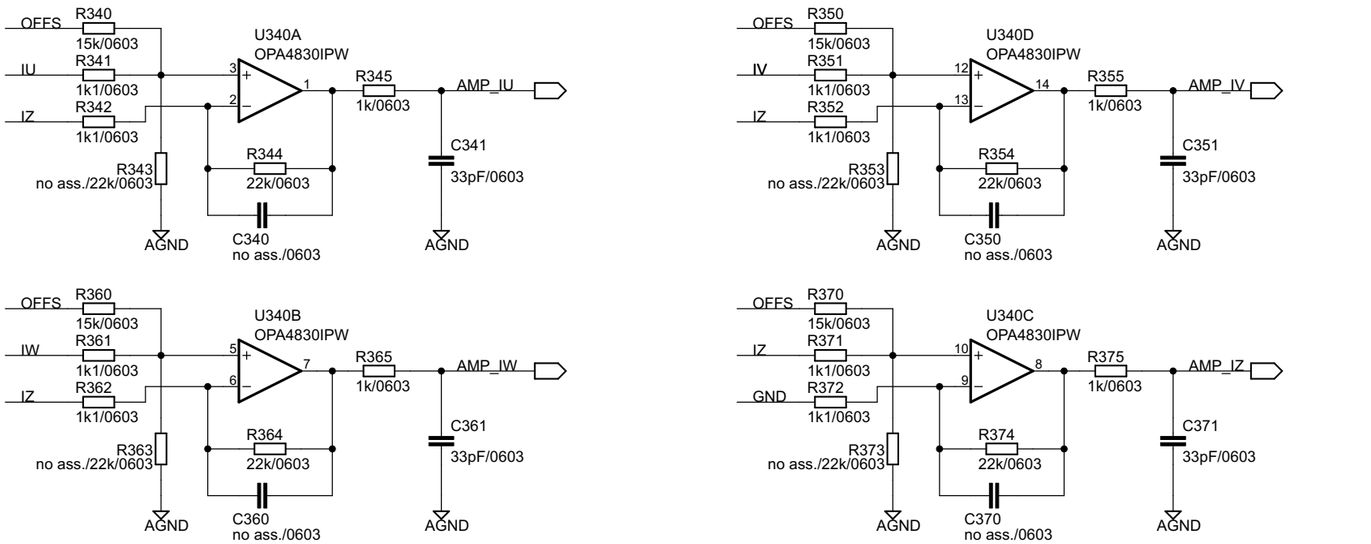

MOTOR CONNECTOR

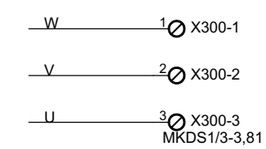

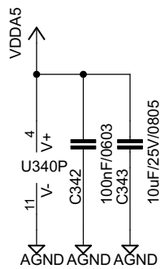

V2 / 08.05.2012 / Ma

Driver, Power Stage, Shunt Amp	
MOT_GPDLV-V2	
14.05.2012 09:36:51	
Sheet: 3/4	

RESOLVER CONNECTOR

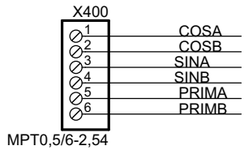

RESOLVER SECONDARY SIGNAL READER

RESOLVER PRIMARY COIL EXCITATION

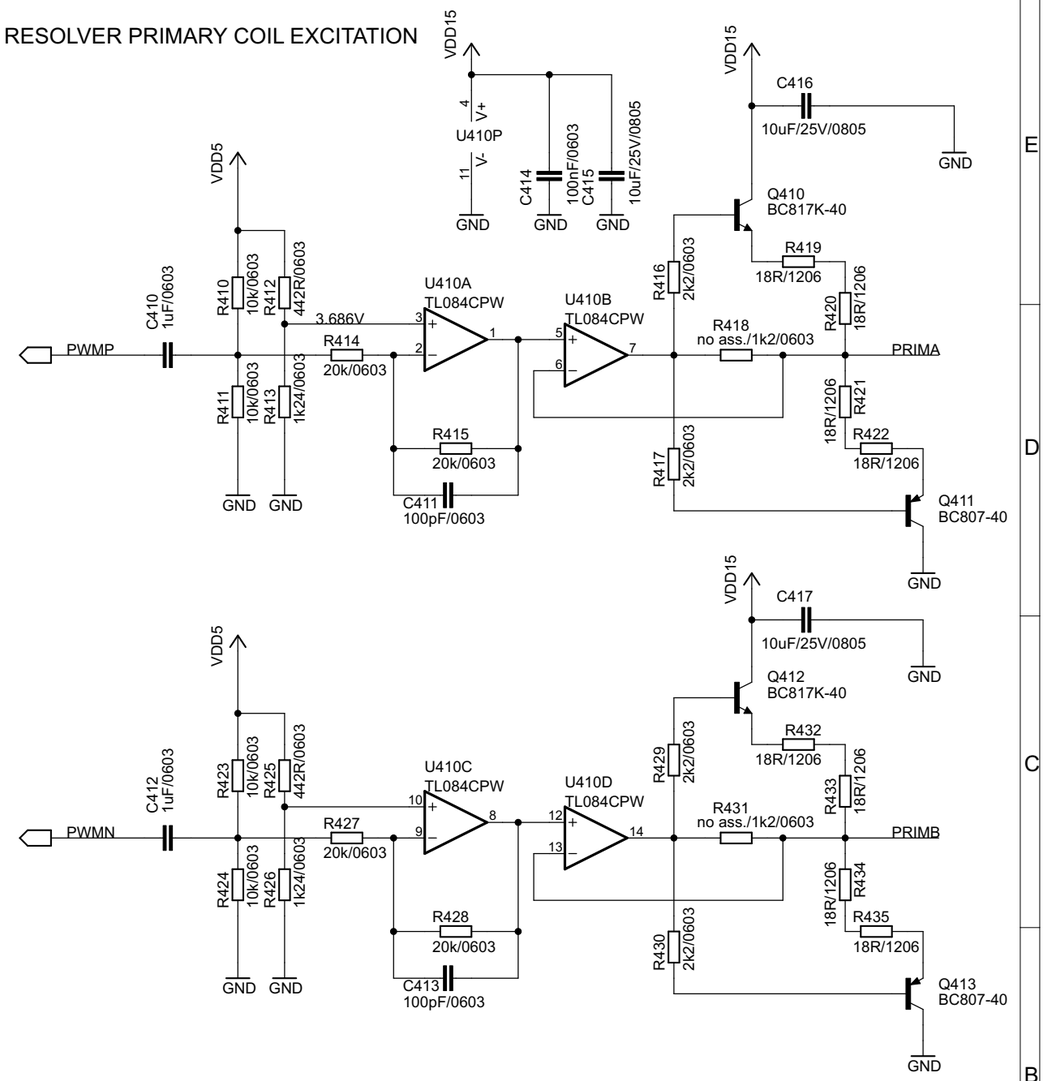

ENCODER CONNECTOR

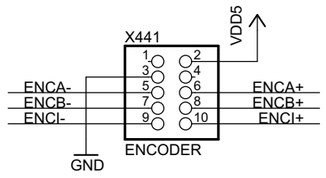

ENCODER LINE DRIVER

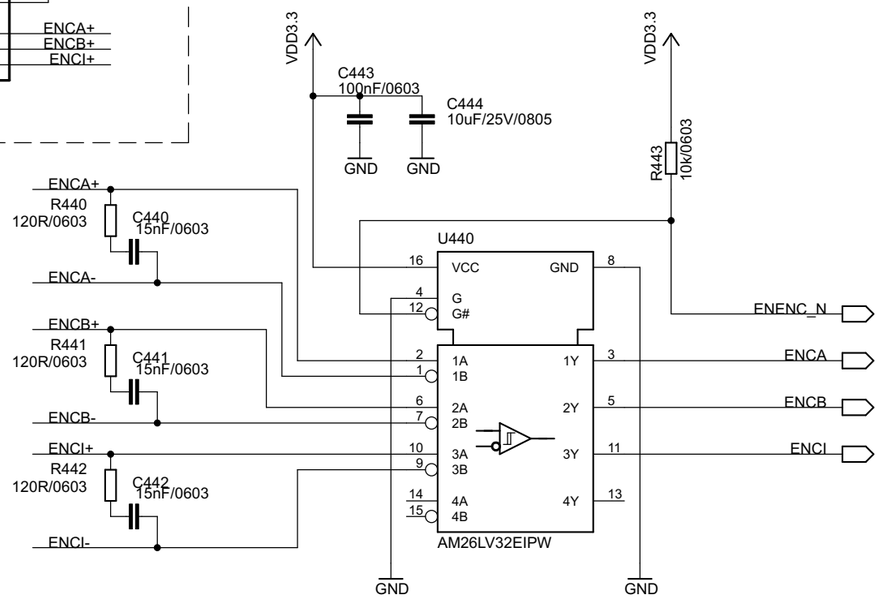

HALL SENSOR CONNECTOR

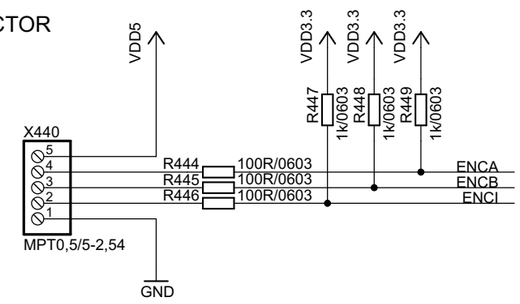

V2 / 08.05.2012 / Ma

Infineon	Resolver, Encoder
	MOT_GPDLV-V2
	14.05.2012 09:36:51
	Sheet: 4/4