XMC5200 Evaluation Kit Rev 01

CONTENTS

PAGE	DESCRIPTION
01	Contents
02	Block Diagram
03	KitProg3
04	XMC5200 Decaps, clock, reset, and debug
05	XMC5200_MCU_P1
06	XMC5200_MCU_P2
07	XMC5200_MCU_P3
08	XMC5200_MCU_P4
09	XMC5200_MCU_P5
10	Arduino compatible pin-headers
11	CANFD, Potentiometer
12	Revision History

Legal Disclaimer :
The information given in this document shall in no event be regarded as a guarantee of conditions or characteristics. With respect to any examples or hints given herein, any typical values stated herein and/or any information regarding the application of the device, Infineon Technologies hereby disclaims any and all warranties and liabilities of any kind, including without limitation, warranties of non-infringement of intellectual property rights of any third party.

SCH Title : XMC5200 Evaluation Kit (KIT_XMC52_EVK)

Page Title: Contents

Size	Document Number	Drawn By	Approved By	Rev
A4	630-60719-01	SONAS	-	1.0

Date: Thursday, July 10, 2025 Sheet 1 of 12

BLOCK DIAGRAM

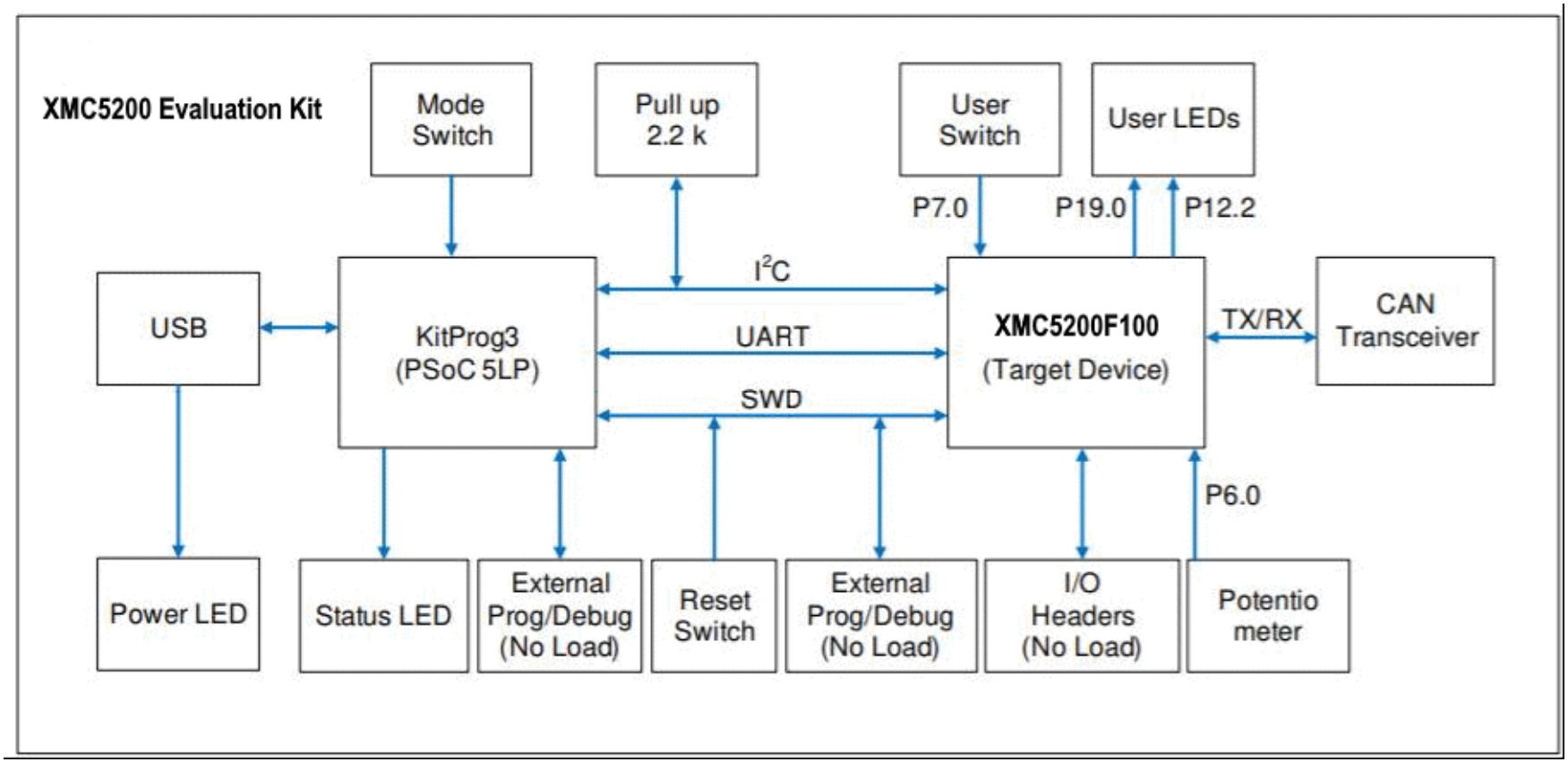

Legal Disclaimer :
The information given in this document shall in no event be regarded as a guarantee of conditions or characteristics. With respect to any examples or hints given herein, any typical values stated herein and/or any information regarding the application of the device, Infineon Technologies hereby disclaims any and all warranties and liabilities of any kind, including without limitation, warranties of non-infringement of intellectual property rights of any third party.

SCH Title : XMC5200 Evaluation Kit (KIT_XMC52_EVK)				
Page Title: Block Diagram				
Size	Document Number	Drawn By	Approved By	Rev
A4	630-60719-01	SONAS	-	1.0
Date: Thursday, July 10, 2025			Sheet 2 of 12	

PSoC 5LP based KitProg3

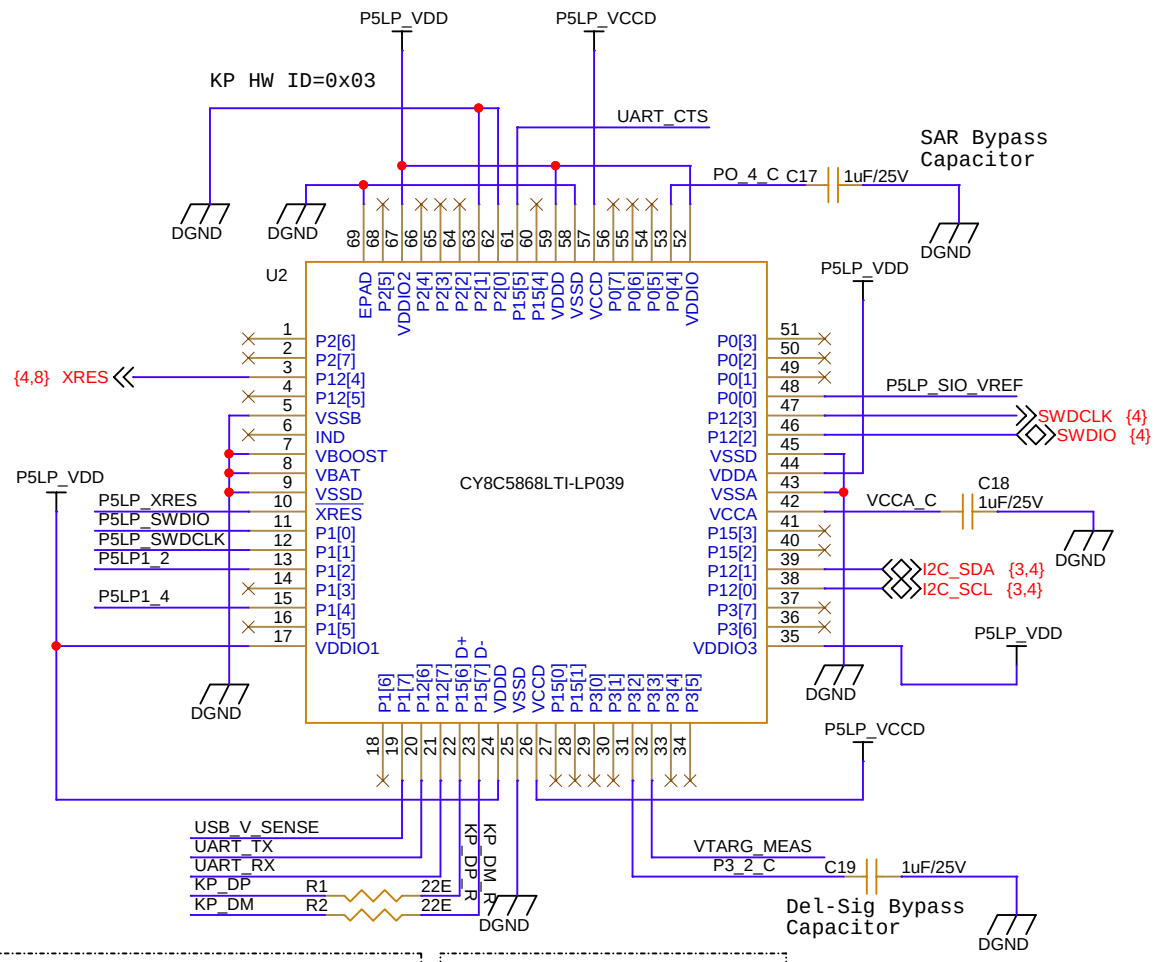

Decoupling Capacitors

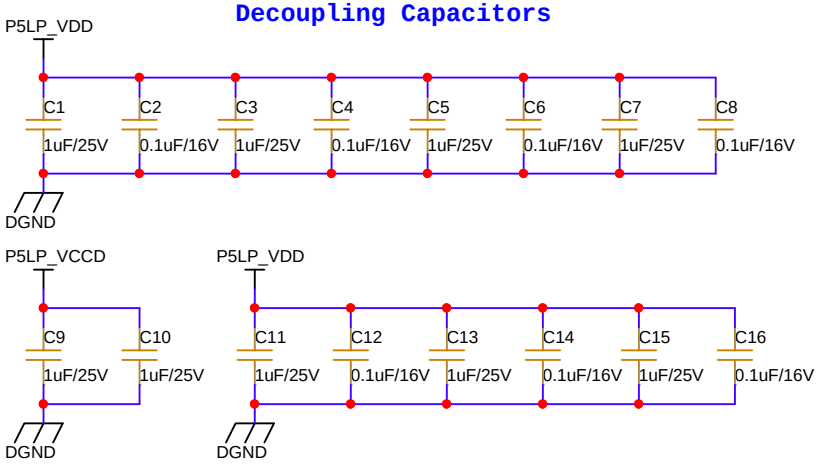

KitProg3 Status LED

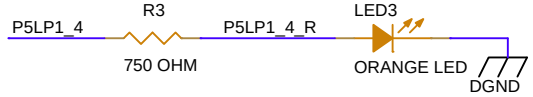

Power LED

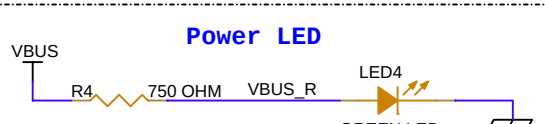

Voltage Monitoring

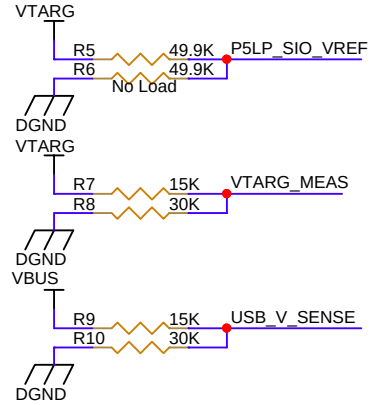

UART Interface

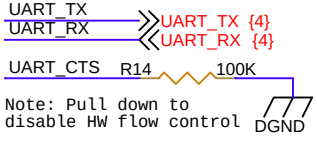

I2C Interface

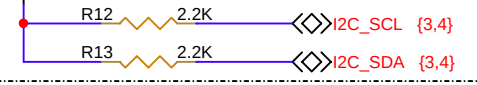

USB Micro Connector

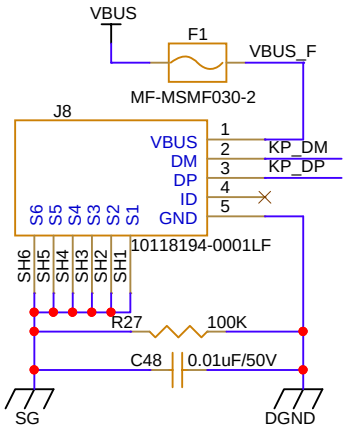

PSoC 5LP Program/ Debug Connector

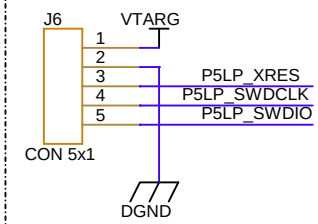

Mode Switch

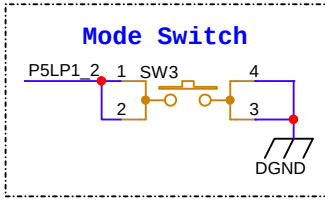

PSoC 5LP Power

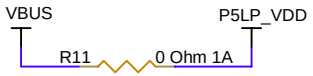

Target Power

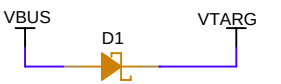

Legal Disclaimer :
The information given in this document shall in no event be regarded as a guarantee of conditions or characteristics. With respect to any examples or hints given herein, any typical values stated herein and/or any information regarding the application of the device, Infineon Technologies hereby disclaims any and all warranties and liabilities of any kind, including without limitation, warranties of non-infringement of intellectual property rights of any third party.

SCH Title : XMC5200 Evaluation Kit (KIT_XMC52_EVK)				
Page Title: Kit Prog 3				
Size	Document Number	Drawn By	Approved By	Rev
A4	630-60719-01	SONAS	-	1.0
Date:	Thursday, July 10, 2025	Sheet	3 of 12	

XMC5200 Decaps, clock, reset, and debug

XMC5200 Decoupling Capacitors

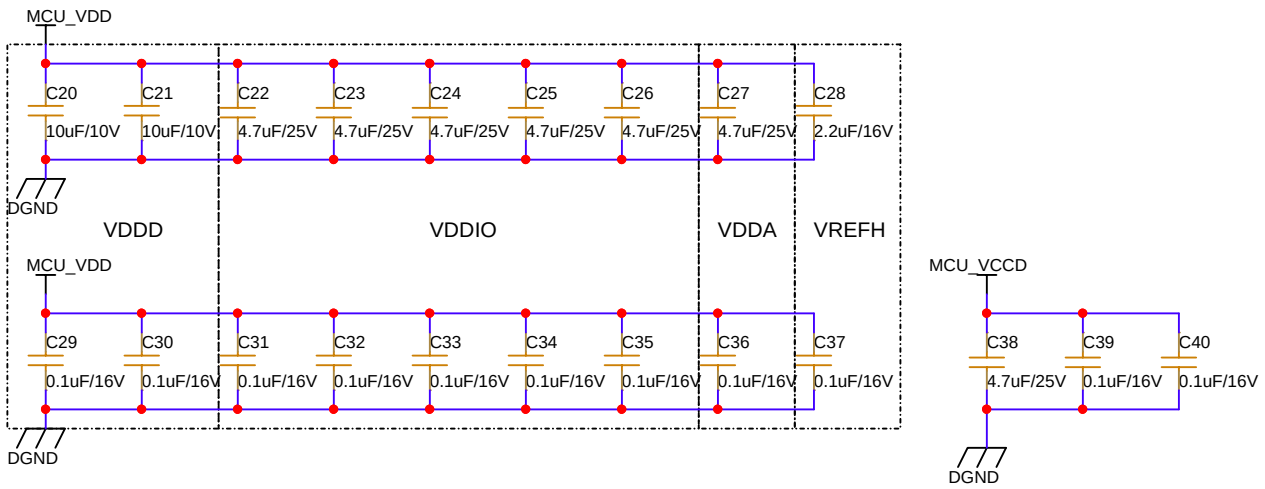

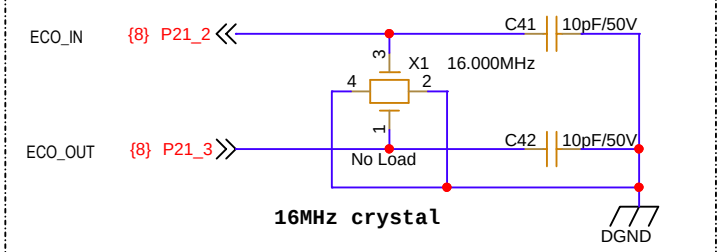

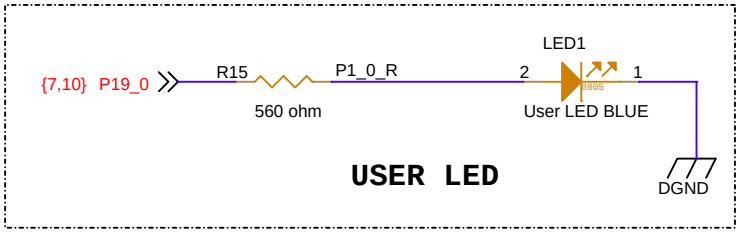

XMC5200 Program/Debug Header

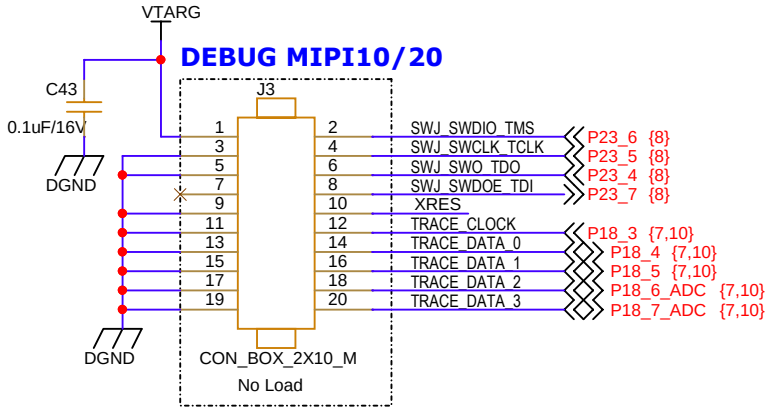

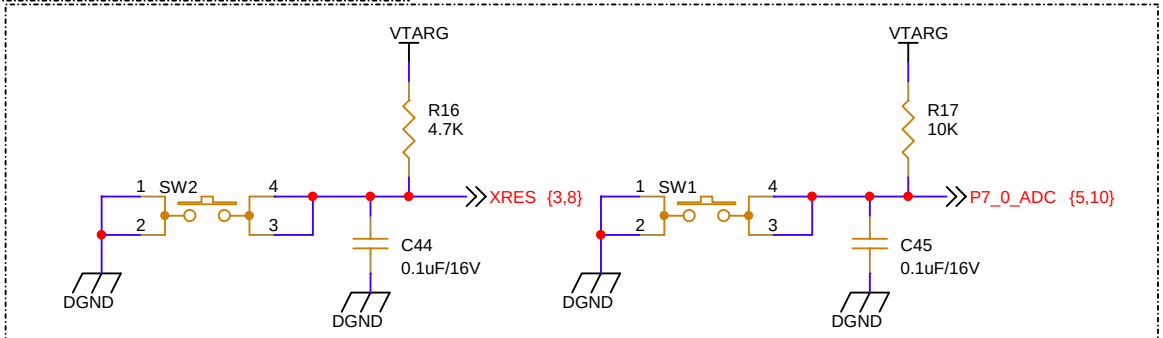

KitProg3 connection

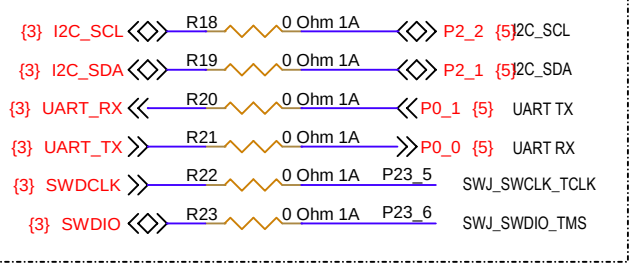

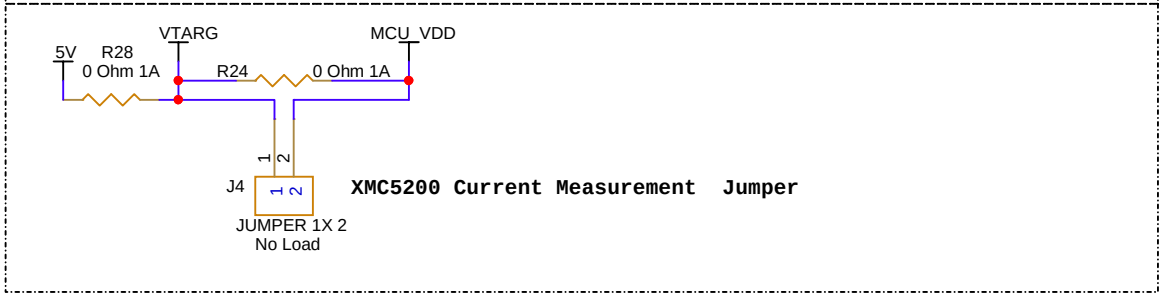

Legal Disclaimer :
The information given in this document shall in no event be regarded as a guarantee of conditions or characteristics. With respect to any examples or hints given herein, any typical values stated herein and/or any information regarding the application of the device, Infineon Technologies hereby disclaims any and all warranties and liabilities of any kind, including without limitation, warranties of non-infringement of intellectual property rights of any third party.

SCH Title : XMC5200 Evaluation Kit (KIT_XMC52_EVK)				
Page Title: XMC5200 Decaps, CLK, RST				
Size	Document Number	Drawn By	Approved By	Rev
A4	630-60719-01	SONAS	-	1.0
Date: Thursday, July 10, 2025		Sheet 4 of 12		

U1A

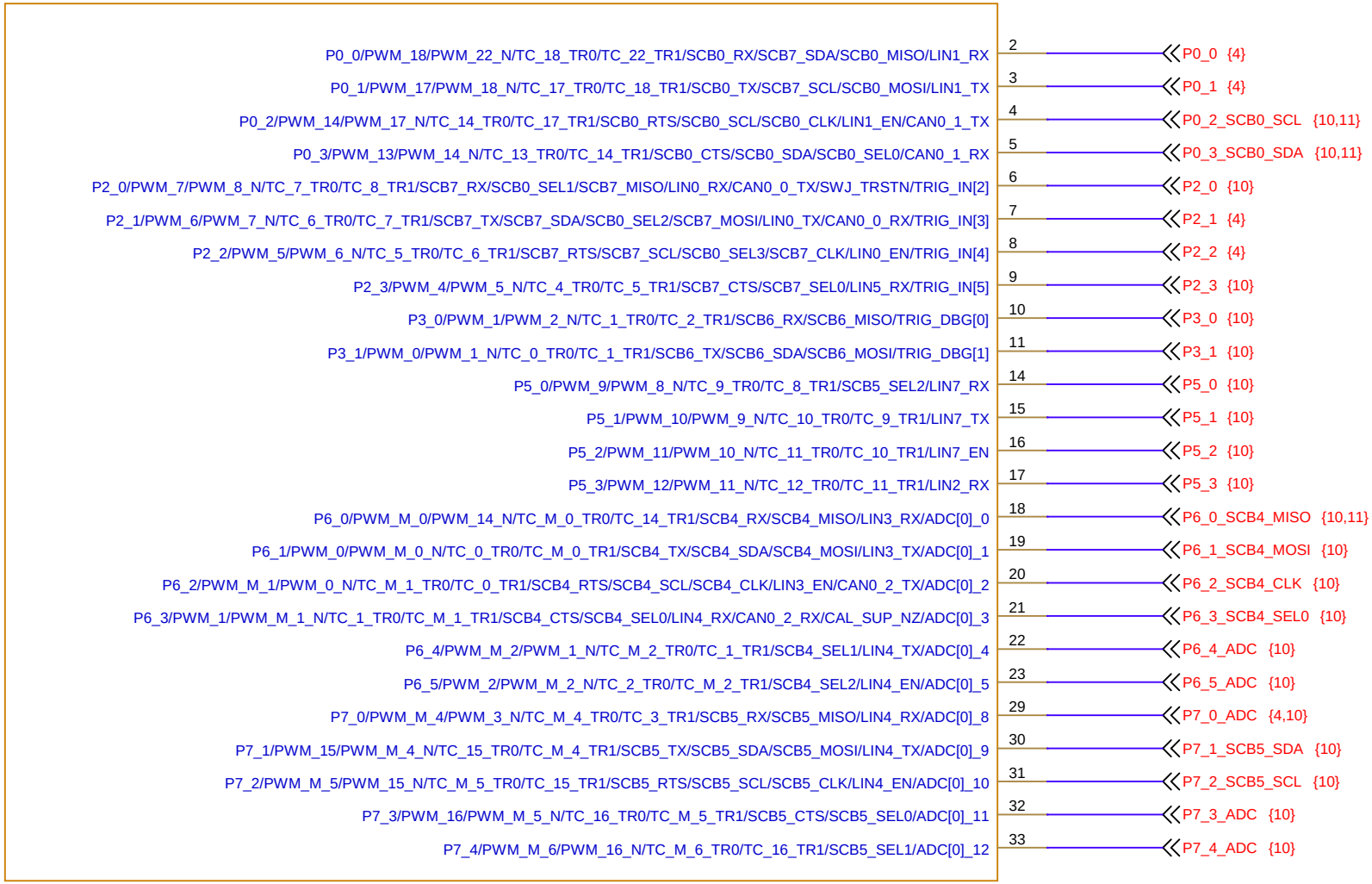

XMC5200F100K1088AA

Legal Disclaimer :
The information given in this document shall in no event be regarded as a guarantee of conditions or characteristics. With respect to any examples or hints given herein, any typical values stated herein and/or any information regarding the application of the device, Infineon Technologies hereby disclaims any and all warranties and liabilities of any kind, including without limitation, warranties of non-infringement of intellectual property rights of any third party.

SCH Title : XMC5200 Evaluation Kit (KIT_XMC52_EVK)

Page Title: XMC5200 MCU P1

Size	Document Number	Drawn By	Approved By	Rev
A4	630-60719-01	SONAS	-	1.0

Date: Thursday, July 10, 2025 Sheet 5 of 12

U1B

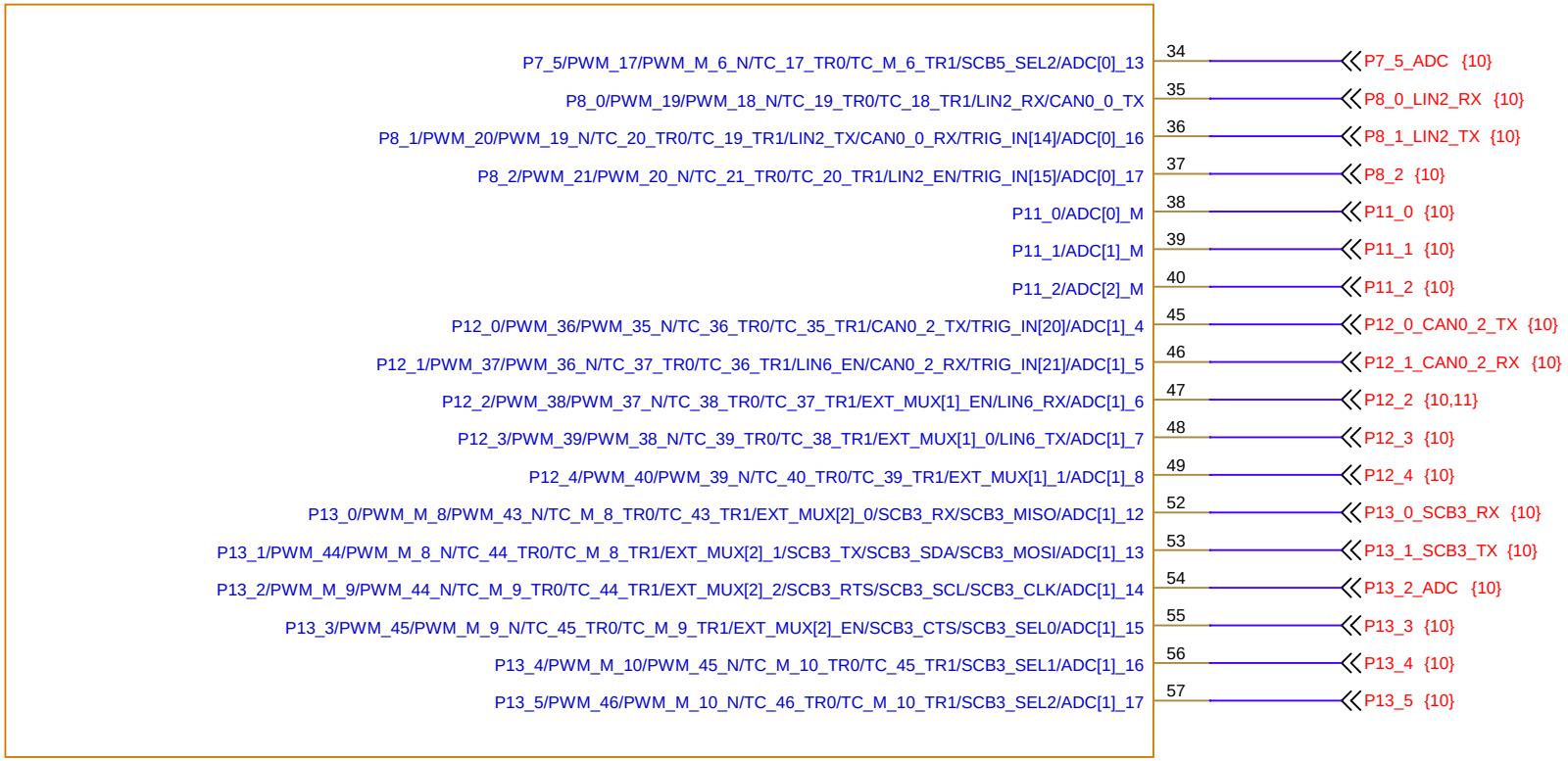

XMC5200F100K1088AA

Legal Disclaimer :
The information given in this document shall in no event be regarded as a guarantee of conditions or characteristics. With respect to any examples or hints given herein, any typical values stated herein and/or any information regarding the application of the device, Infineon Technologies hereby disclaims any and all warranties and liabilities of any kind, including without limitation, warranties of non-infringement of intellectual property rights of any third party.

SCH Title : XMC5200 Evaluation Kit (KIT_XMC52_EVK)

Page Title: XMC5200 MCU P2

Size	Document Number	Drawn By	Approved By	Rev
A4	630-60719-01	SONAS	-	1.0

Date: Thursday, July 10, 2025 Sheet 6 of 12

U1C

P13_6/PWM_M_11/PWM_46_N/TC_M_11_TR0/TC_46_TR1/SCB3_SEL3/TRIG_IN[22]/ADC[1]_18	58	P13_6 {10}
P13_7/PWM_47/PWM_M_11_N/TC_47_TR0/TC_M_11_TR1/TRIG_IN[23]/ADC[1]_19	59	P13_7 {10}
P14_0/PWM_48/PWM_47_N/TC_48_TR0/TC_47_TR1/SCB2_RX/SCB2_MISO/CAN1_0_TX/ADC[1]_20	60	P14_0_SCB2_RX {10}
P14_1/PWM_49/PWM_48_N/TC_49_TR0/TC_48_TR1/SCB2_TX/SCB2_SDA/SCB2_MOSI/CAN1_0_RX/ADC[1]_21	61	P14_1_SCB2_TX {10}
P14_2/PWM_50/PWM_49_N/TC_50_TR0/TC_49_TR1/SCB2_RTS/SCB2_SCL/SCB2_CLK/LIN6_RX/ADC[1]_22	62	P14_2_LIN6_RX {10}
P14_3/PWM_51/PWM_50_N/TC_51_TR0/TC_50_TR1/SCB2_CTS/SCB2_SEL0/LIN6_TX/ADC[1]_23	63	P14_3_LIN6_TX {10}
P17_0/PWM_61/PWM_62_N/TC_61_TR0/TC_62_TR1/CAN1_1_TX	64	P17_0 {10}
P17_1/PWM_60/PWM_61_N/TC_60_TR0/TC_61_TR1/PWM_H_2/SCB3_RX/SCB3_MISO/CAN1_1_RX	65	P17_1_SCB3_RX {10}
P17_2/PWM_59/PWM_60_N/TC_59_TR0/TC_60_TR1/PWM_H_2_N/SCB3_TX/SCB3_SDA/SCB3_MOSI	66	P17_2_SCB3_TX {10}
P18_0/PWM_M_6/PWM_M_5_N/TC_M_6_TR0/TC_M_5_TR1/PWM_H_0/SCB1_RX/SCB1_MISO/FAULT_OUT_0/ADC[2]_0	67	P18_0_SCB1_RX {10}
P18_1/PWM_M_7/PWM_M_6_N/TC_M_7_TR0/TC_M_6_TR1/PWM_H_0_N/SCB1_TX/SCB1_SDA/SCB1_MOSI/FAULT_OUT_1/ADC[2]_1	68	P18_1_SCB1_TX {10}
P18_2/PWM_55/PWM_M_7_N/TC_55_TR0/TC_M_7_TR1/PWM_H_1/SCB1_RTS/SCB1_SCL/SCB1_CLK/ADC[2]_2	69	P18_2 {10}
P18_3/PWM_54/PWM_55_N/TC_54_TR0/TC_55_TR1/PWM_H_1_N/SCB1_CTS/SCB1_SEL0/TRACE_CLOCK/ADC[2]_3	70	P18_3 {4,10}
P18_4/PWM_53/PWM_54_N/TC_53_TR0/TC_54_TR1/PWM_H_2/SCB1_SEL1/TRACE_DATA_0/ADC[2]_4	71	P18_4 {4,10}
P18_5/PWM_52/PWM_53_N/TC_52_TR0/TC_53_TR1/PWM_H_2_N/SCB1_SEL2/TRACE_DATA_1/ADC[2]_5	72	P18_5 {4,10}
P18_6/PWM_51/PWM_52_N/TC_51_TR0/TC_52_TR1/PWM_H_3/SCB1_SEL3/CAN1_2_TX/TRACE_DATA_2/ADC[2]_6	73	P18_6_ADC {4,10}
P18_7/PWM_50/PWM_51_N/TC_50_TR0/TC_51_TR1/PWM_H_3_N/CAN1_2_RX/TRACE_DATA_3/ADC[2]_7	74	P18_7_ADC {4,10}
P19_0/PWM_M_3/PWM_50_N/TC_M_3_TR0/TC_50_TR1/TC_H_0_TR0/SCB2_RX/SCB2_MISO/FAULT_OUT_2	77	P19_0 {4,10}

XMC5200F100K1088AA

Legal Disclaimer :
The information given in this document shall in no event be regarded as a guarantee of conditions or characteristics. With respect to any examples or hints given herein, any typical values stated herein and/or any information regarding the application of the device, Infineon Technologies hereby disclaims any and all warranties and liabilities of any kind, including without limitation, warranties of non-infringement of intellectual property rights of any third party.

SCH Title : XMC5200 Evaluation Kit (KIT_XMC52_EVK)

Page Title: XMC5200 MCU P3

Size	Document Number	Drawn By	Approved By	Rev
A4	630-60719-01	SONAS	-	1.0

Date: Thursday, July 10, 2025 Sheet 7 of 12

U1D

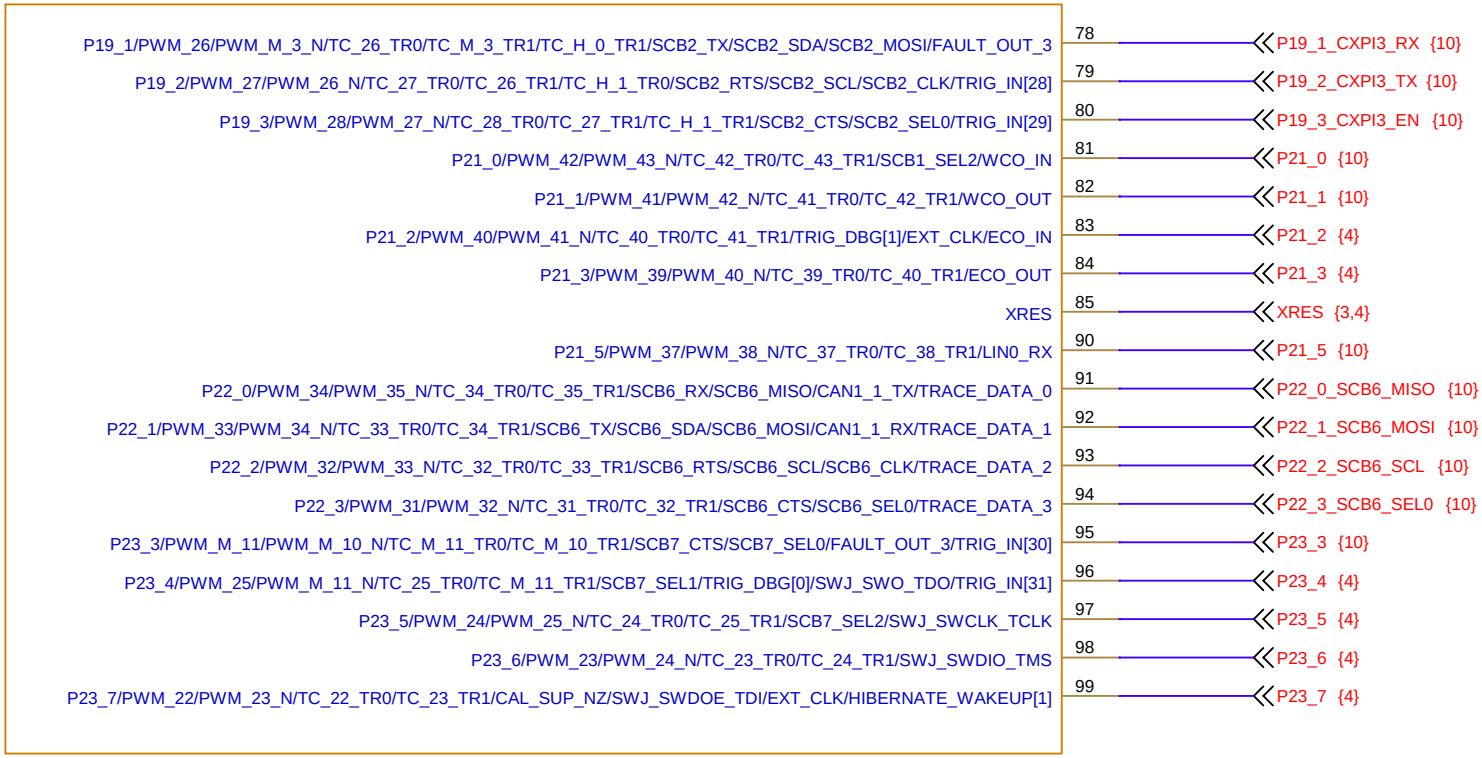

XMC5200F100K1088AA

Legal Disclaimer :
The information given in this document shall in no event be regarded as a guarantee of conditions or characteristics. With respect to any examples or hints given herein, any typical values stated herein and/or any information regarding the application of the device, Infineon Technologies hereby disclaims any and all warranties and liabilities of any kind, including without limitation, warranties of non-infringement of intellectual property rights of any third party.

SCH Title : XMC5200 Evaluation Kit (KIT_XMC52_EVK)

Page Title: XMC5200 MCU P4

Size	Document Number	Drawn By	Approved By	Rev
A4	630-60719-01	SONAS	-	1.0

Date: Thursday, July 10, 2025 Sheet 8 of 12

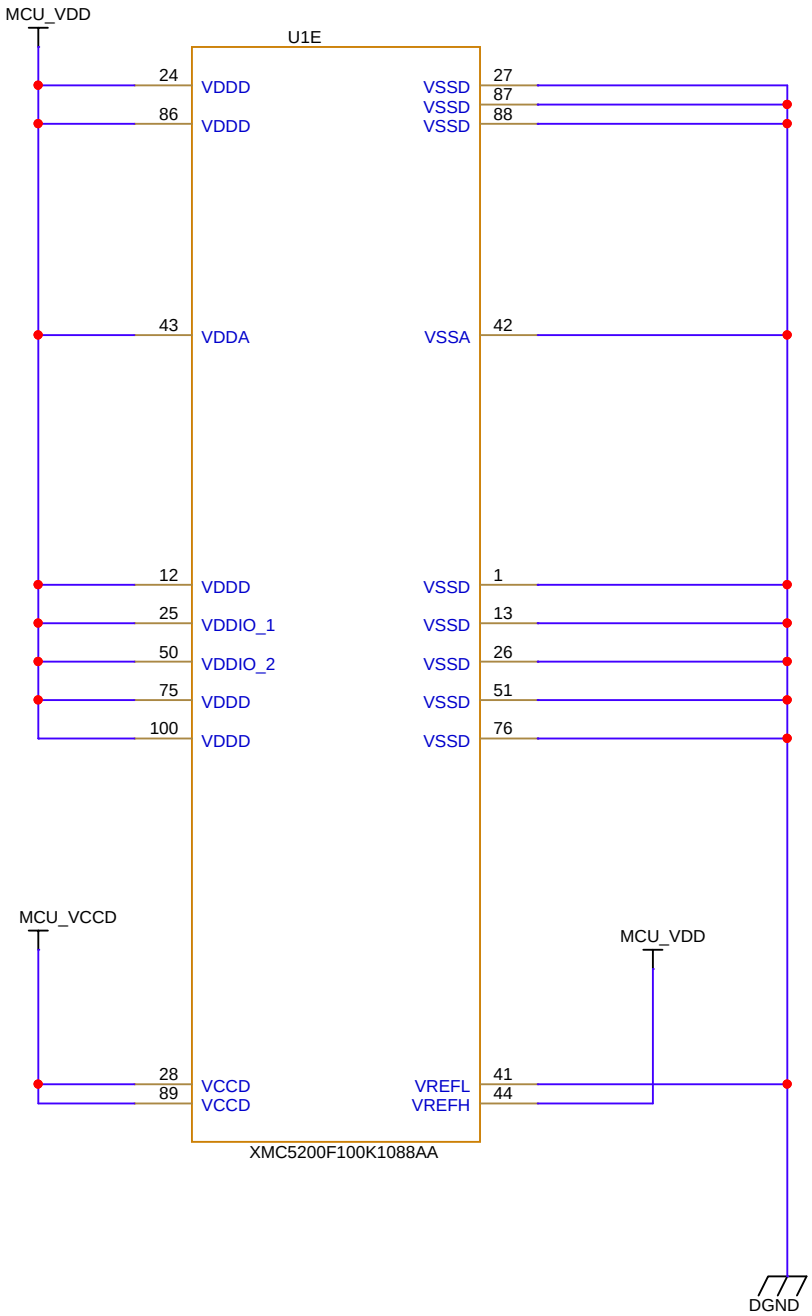

Legal Disclaimer :
The information given in this document shall in no event be regarded as a guarantee of conditions or characteristics. With respect to any examples or hints given herein, any typical values stated herein and/or any information regarding the application of the device, Infineon Technologies hereby disclaims any and all warranties and liabilities of any kind, including without limitation, warranties of non-infringement of intellectual property rights of any third party.

SCH Title : XMC5200 Evaluation Kit (KIT_XMC52_EVK)				
Page Title: XMC5200 MCU P5				
Size	Document Number	Drawn By	Approved By	Rev
A4	**630-60719-01**	**SONAS**	**-**	**1.0**
Date: Thursday, July 10, 2025		Sheet **9** of **12**		

Target Device

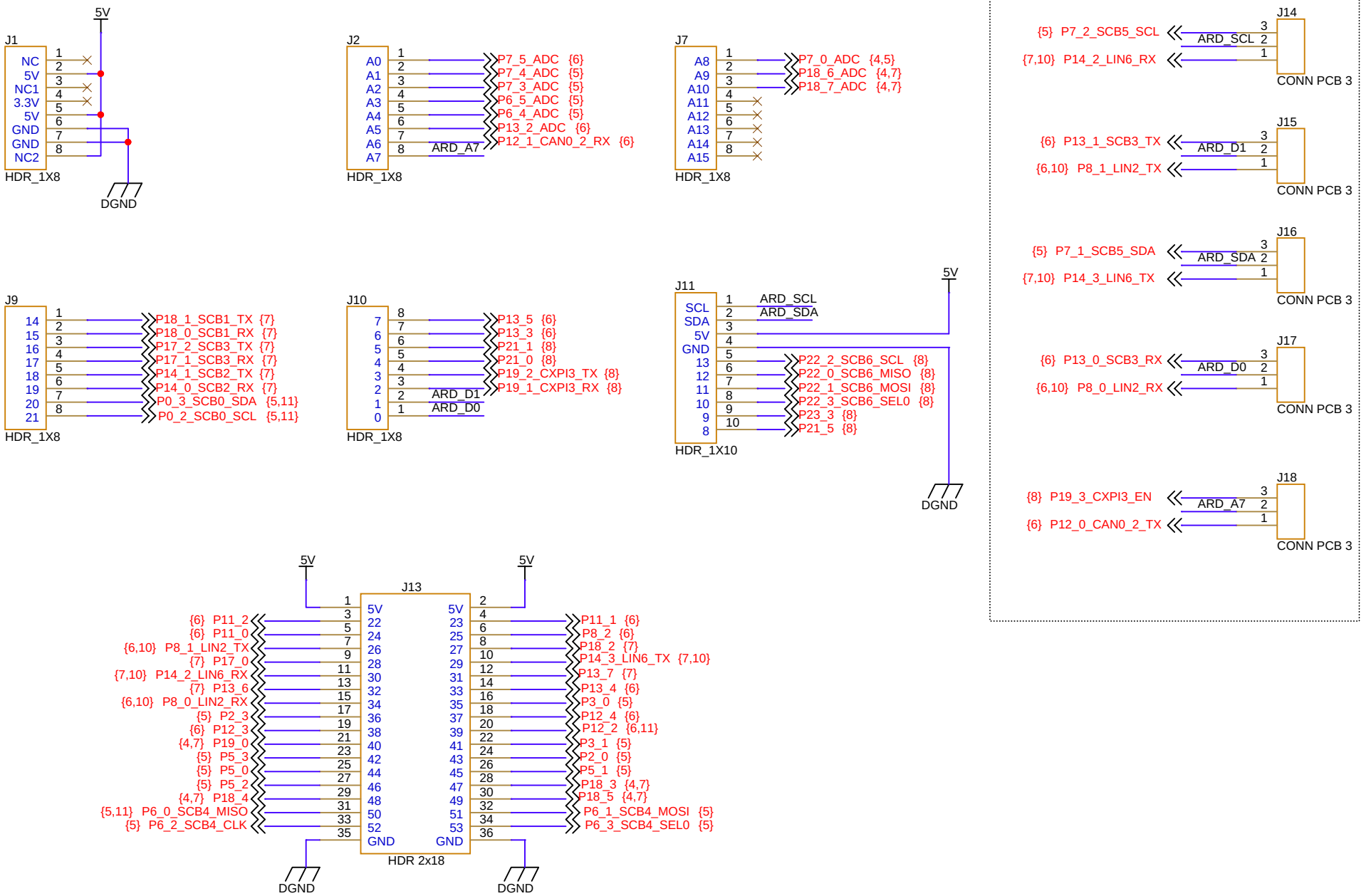

Legal Disclaimer :
The information given in this document shall in no event be regarded as a guarantee of conditions or characteristics. With respect to any examples or hints given herein, any typical values stated herein and/or any information regarding the application of the device, Infineon Technologies hereby disclaims any and all warranties and liabilities of any kind, including without limitation, warranties of non-infringement of intellectual property rights of any third party.

SCH Title : XMC5200 Evaluation Kit (KIT_XMC52_EVK)				
Page Title: Arduino Compatible Pinheader				
Size	Document Number	Drawn By	Approved By	Rev
A4	**630-60719-01**	**SONAS**	**-**	**1.0**
Date:	Thursday, July 10, 2025	Sheet	**10** of **12**	

CANFD, Potentiometer

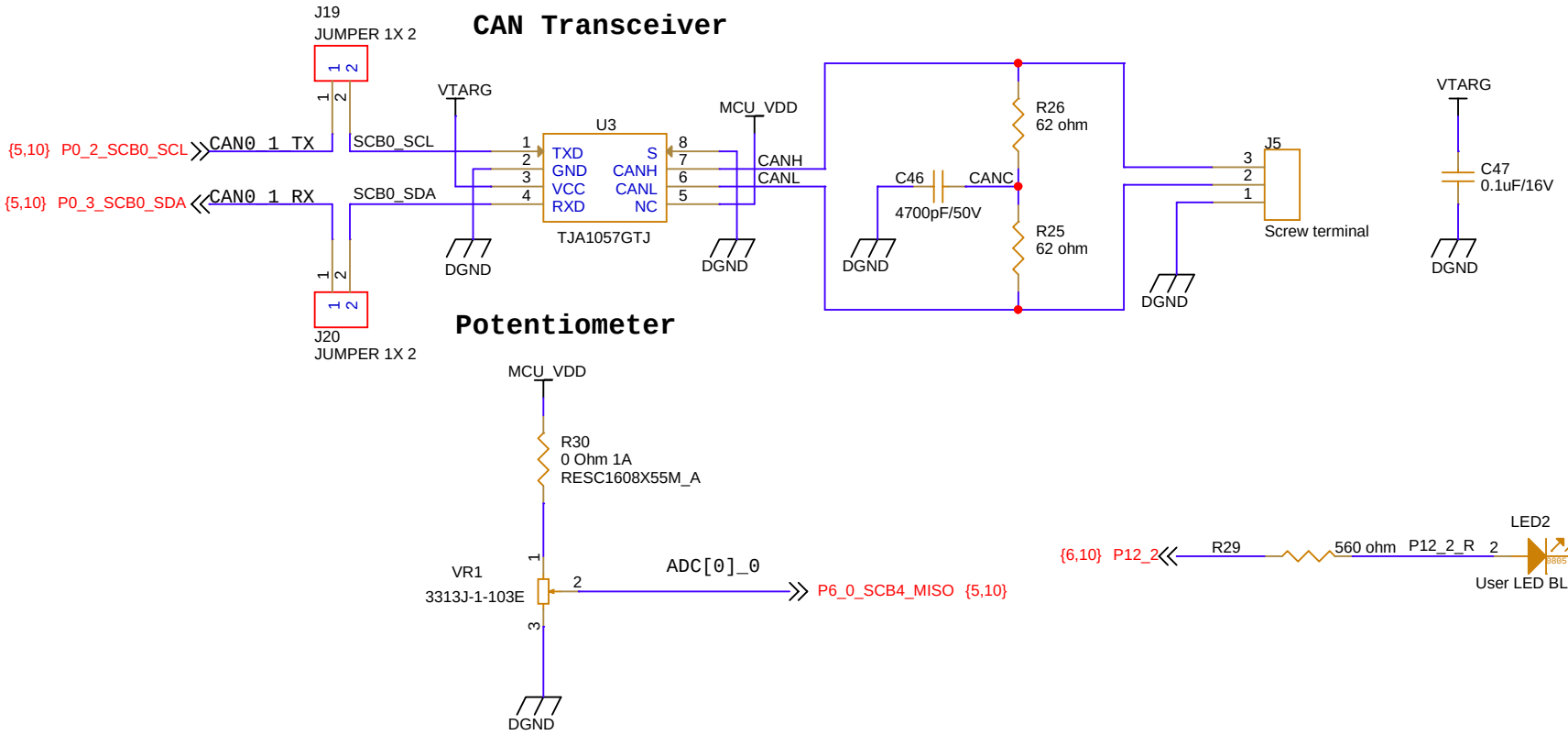

Legal Disclaimer :
The information given in this document shall in no event be regarded as a guarantee of conditions or characteristics. With respect to any examples or hints given herein, any typical values stated herein and/or any information regarding the application of the device, Infineon Technologies hereby disclaims any and all warranties and liabilities of any kind, including without limitation, warranties of non-infringement of intellectual property rights of any third party.

SCH Title : XMC5200 Evaluation Kit (KIT_XMC52_EVK)				
Page Title: CANFD, Potentiometer				
Size	Document Number	Drawn By	Approved By	Rev
A4	630-60719-01	SONAS	-	1.0
Date: Thursday, July 10, 2025		Sheet 11 of 12		

REVISION HISTORY

Rev	DESCRIPTION	DATE
1.0	XMC5200 Evaluation Kit First Version	10/07/2025

Legal Disclaimer :
The information given in this document shall in no event be regarded as a guarantee of conditions or characteristics. With respect to any examples or hints given herein, any typical values stated herein and/or any information regarding the application of the device, Infineon Technologies hereby disclaims any and all warranties and liabilities of any kind, including without limitation, warranties of non-infringement of intellectual property rights of any third party.

SCH Title : XMC5200 Evaluation Kit (KIT_XMC52_EVK)				
Page Title: Revision History				
Size	Document Number	Drawn By	Approved By	Rev
A4	630-60719-01	SONAS	-	1.0
Date: Thursday, July 10, 2025			Sheet 12 of 12	