PSOC™ Edge E84 HMI Kit Microphone Board

CONTENTS	
PAGE	**DESCRIPTION**
01	Title Page
02	Block Diagram
03	PDM MICs & User RGB LED
04	Analog MICs & Interface Connector
05	Accessories
06	Revision History

Drawing Numbers	
PCBA	121-60791-01
PCB	600-60791-01
FAB DRW	610-60791-01
ASSY DRW	620-60791-01
SCH DRW	630-60791-01

Legal Disclaimer :
The information given in this document shall in no event be regarded as a guarantee of conditions or characteristics. With respect to any examples or hints given herein, any typical values stated herein and/or any information regarding the application of the device, Infineon Technologies hereby disclaims any and all warranties and liabilities of any kind, including without limitation, warranties of non-infringement of intellectual property rights of any third party.

SCH Title : PSOC™ Edge E84 HMI Kit Microphone Board

Page Title: Title Page

Size	Document Number	Drawn By	Approved By	Rev
A4	630-60791-01	RISR	RKPM	3.0

Date: Monday, February 09, 2026 Sheet 1 of 6

Block Diagram

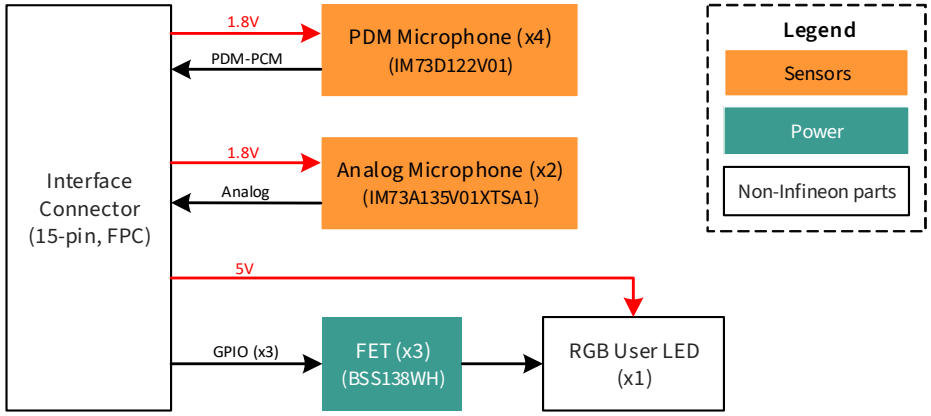

Legal Disclaimer :
The information given in this document shall in no event be regarded as a guarantee of conditions or characteristics. With respect to any examples or hints given herein, any typical values stated herein and/or any information regarding the application of the device, Infineon Technologies hereby disclaims any and all warranties and liabilities of any kind, including without limitation, warranties of non-infringement of intellectual property rights of any third party.

SCH Title : PSOC™ Edge E84 HMI Kit Microphone Board

Page Title: Block Diagram

Size	Document Number	Drawn By	Approved By	Rev
A4	630-60791-01	RISR	RKPM	3.0

Date: Friday, March 13, 2026 Sheet 2 of 6

PDM MICs

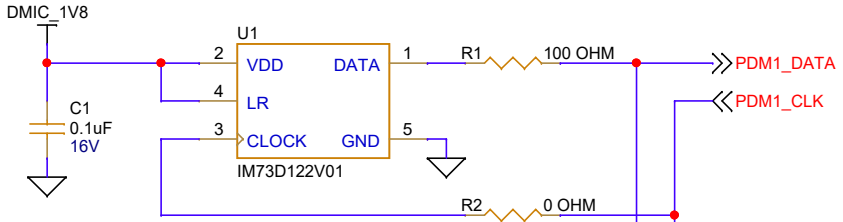

NOTE: PDM DATA is available on the rising edge of the clock signal

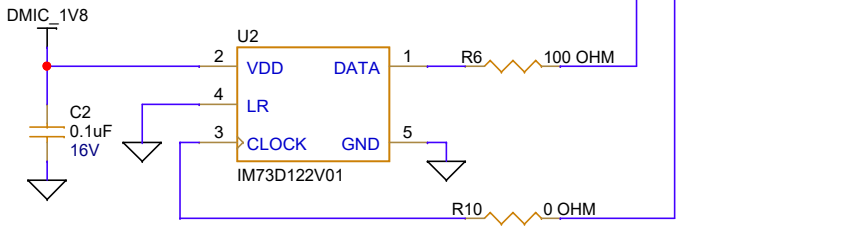

NOTE: PDM DATA is available on the falling edge of the clock signal

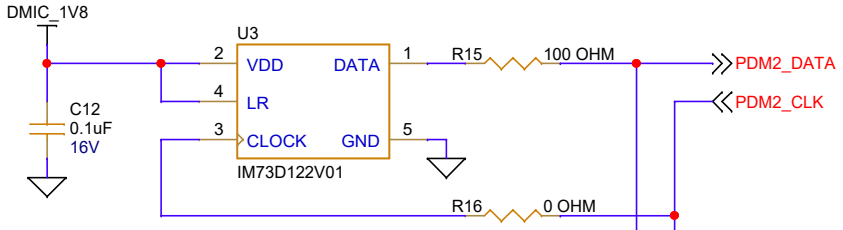

NOTE: PDM DATA is available on the rising edge of the clock signal

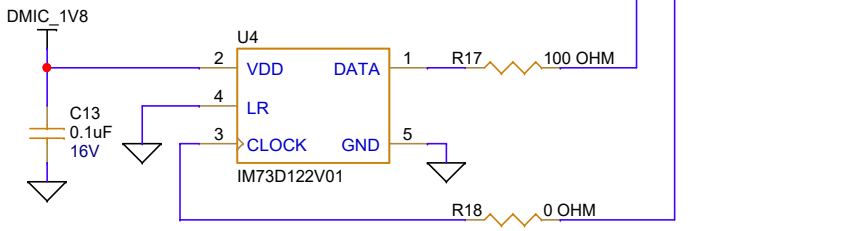

NOTE: PDM DATA is available on the falling edge of the clock signal

User RGB LED

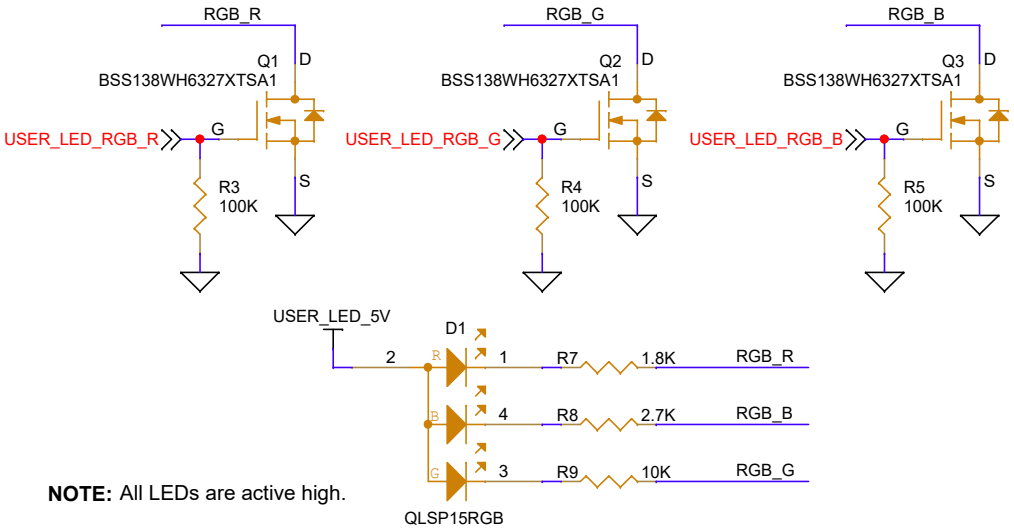

NOTE: All LEDs are active high.

Legal Disclaimer :
The information given in this document shall in no event be regarded as a guarantee of conditions or characteristics. With respect to any examples or hints given herein, any typical values stated herein and/or any information regarding the application of the device, Infineon Technologies hereby disclaims any and all warranties and liabilities of any kind, including without limitation, warranties of non-infringement of intellectual property rights of any third party.

SCH Title : PSOC™ Edge E84 HMI Kit Microphone Board				
Page Title: PDM MICs & User RGB LED				
Size	Document Number	Drawn By	Approved By	Rev
A4	630-60791-01	RISR	RKPM	3.0
Date: Monday, February 09, 2026		Sheet 3 of 6		

Analog MICs

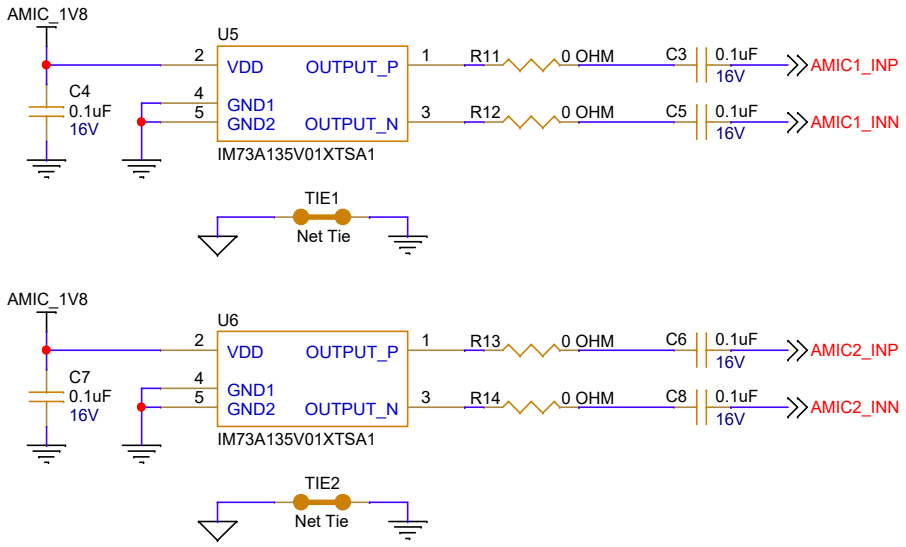

Interface Connector

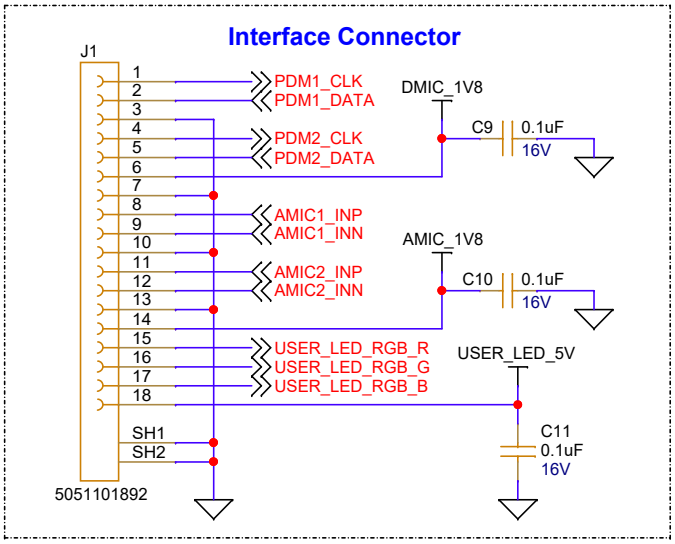

Legal Disclaimer :
The information given in this document shall in no event be regarded as a guarantee of conditions or characteristics. With respect to any examples or hints given herein, any typical values stated herein and/or any information regarding the application of the device, Infineon Technologies hereby disclaims any and all warranties and liabilities of any kind, including without limitation, warranties of non-infringement of intellectual property rights of any third party.

SCH Title : PSOC™ Edge E84 HMI Kit Microphone Board

Page Title: Analog MICs & Interface Connector

Size	Document Number	Drawn By	Approved By	Rev
A4	630-60791-01	RISR	RKPM	3.0

Date: Monday, February 09, 2026 Sheet 4 of 6

Accessories

PCBA Label

PCA Label



ACC7

FPC Cable

05-18-A-0050-A-4-06-4-T



ACC6

Legal Disclaimer :
The information given in this document shall in no event be regarded as a guarantee of conditions or characteristics. With respect to any examples or hints given herein, any typical values stated herein and/or any information regarding the application of the device, Infineon Technologies hereby disclaims any and all warranties and liabilities of any kind, including without limitation, warranties of non-infringement of intellectual property rights of any third party.

SCH Title : PSOC™ Edge E84 HMI Kit Microphone Board

Page Title: Accessories

Size	Document Number	Drawn By	Approved By	Rev
A4	630-60791-01	RISR	RKPM	3.0

Date: Monday, February 09, 2026 Sheet 5 of 6

REVISION HISTORY

REV	DESCRIPTION OF CHANGE	ORIG. OF CHANGE	DATE
1.0	Initial Draft	RISR	04/08/2025
3.0	1. U5, U6, U3, U4 RefDes changed to U3, U4, U5, U6 2. R7, R8, R9 values updated	RISR	08/02/2026

Legal Disclaimer :
The information given in this document shall in no event be regarded as a guarantee of conditions or characteristics. With respect to any examples or hints given herein, any typical values stated herein and/or any information regarding the application of the device, Infineon Technologies hereby disclaims any and all warranties and liabilities of any kind, including without limitation, warranties of non-infringement of intellectual property rights of any third party.

SCH Title : PSOC™ Edge E84 HMI Kit Microphone Board

Page Title: Revision History

Size	Document Number	Drawn By	Approved By	Rev
A4	630-60791-01	RISR	RKPM	3.0

Date: Monday, February 09, 2026 Sheet 6 of 6