KIT_PSC3_PFC1

Revision: 2.0

Content:

- ☐ 1. COVER PAGE
- ☐ 2. BLOCK DIAGRAM
- ☐ 3. INPUT STAGE
- ☐ 4. PROTECTION
- ☐ 5. CONTROLLER
- ☐ 6. COMMUNICATION
- ☐ 7. GATE DRIVER
- ☐ 8. MECHANICAL
- ☐ 9. REVISION HISTORY

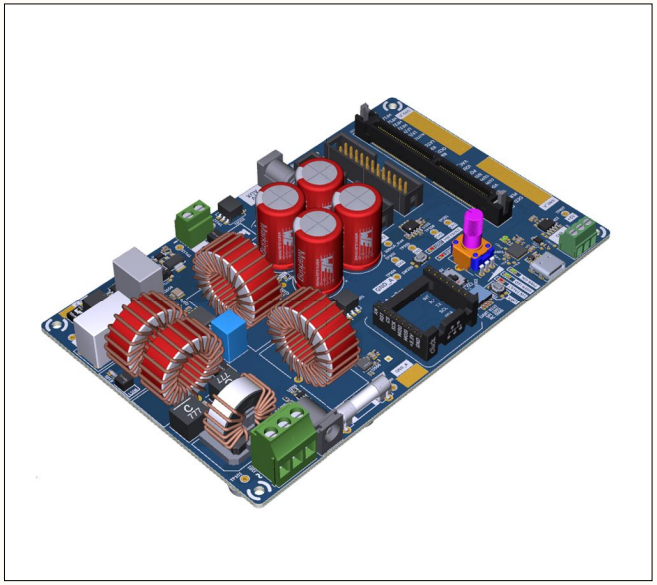

Title: KIT_PSC3_PFC1		Board Number: EDM0008	
Size: A3	Document: Cover Page		Revision: 2.0
Drawn By: Milan Marjanovic		Date: 11.02.2026	Sheet 1 of 9
Address:			

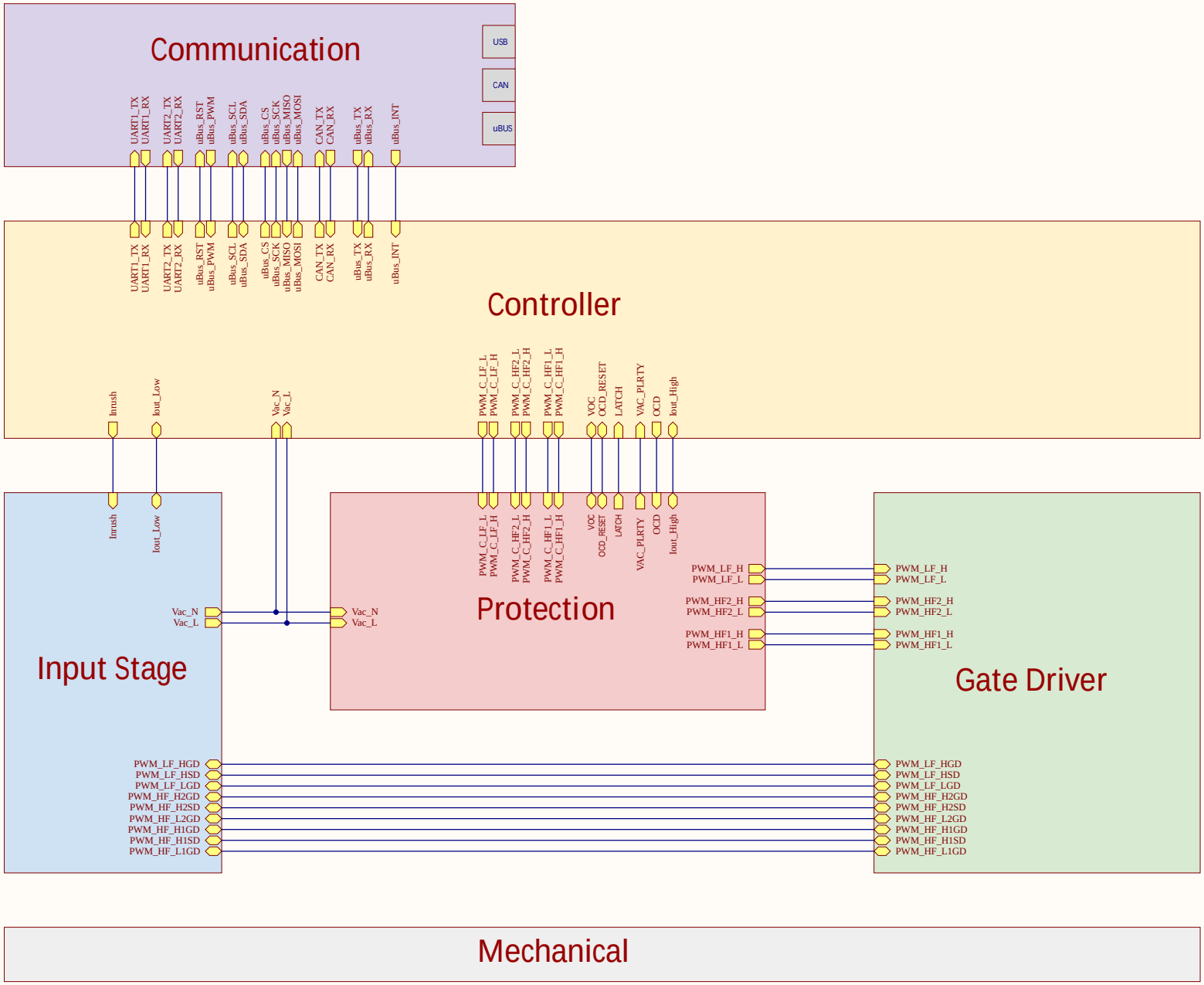

Title: KIT_PSC3_PFC1			Board Number: EDM0008
Size: A3	Document: Block Diagram		Revision: 2.0
Drawn By: Milan Marjanovic		Date: 11.02.2026	Sheet 2 of 9
Address:			

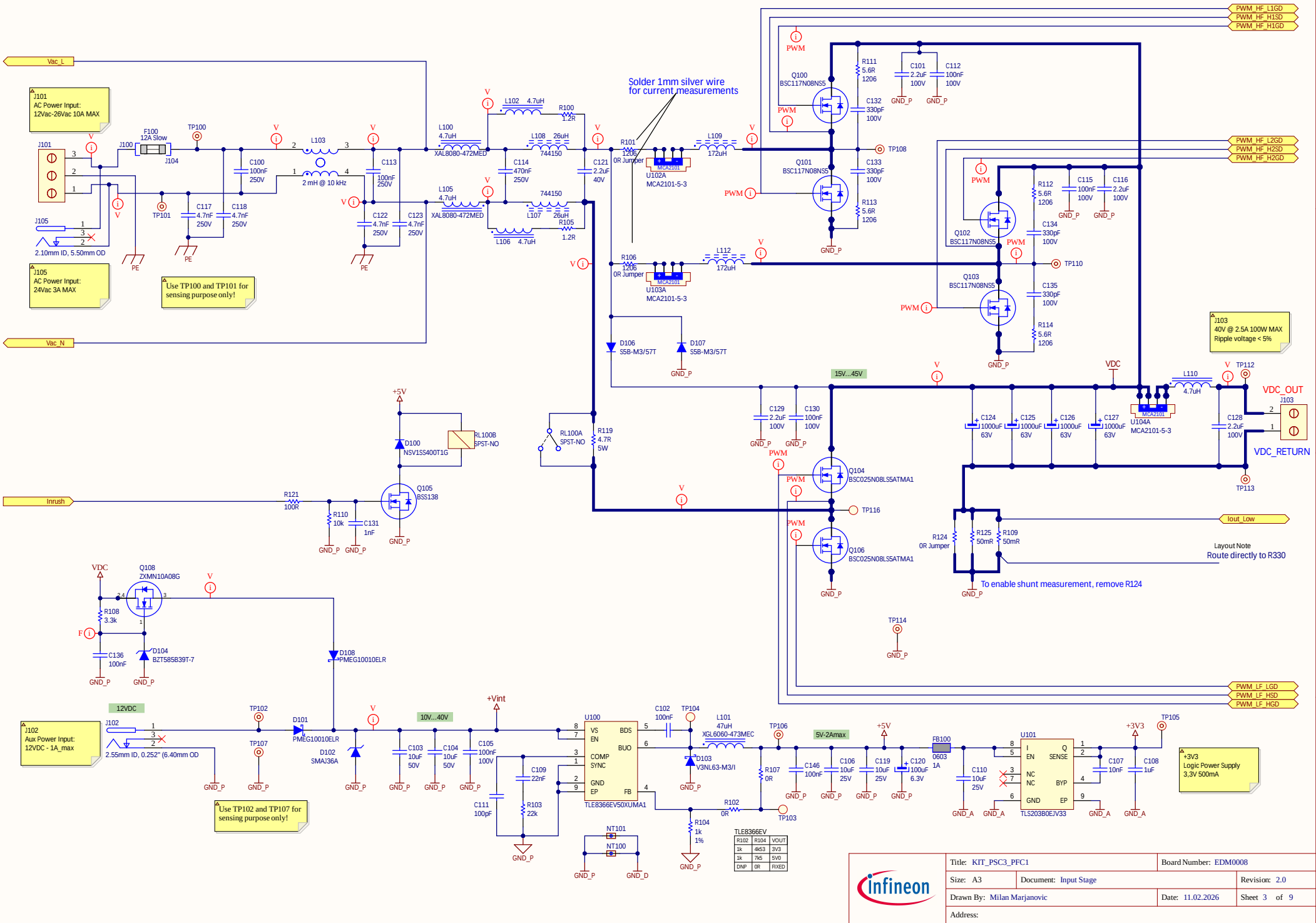
Vac_L
Vac_N
J101
AC Power Input:
12Vac-26Vac 10A MAX
J105
AC Power Input:
24Vac 3A MAX
2.10mm ID, 5.50mm OD
F100
12A Slow
Use TP100 and TP101 for sensing purpose only!
L100 4.7uH
L105 4.7uH
XAL8080-472MED
2 mH @ 10 kHz
Solder 1mm silver wire
for current measurements
R101 0R Jumper
R106 0R Jumper
U102A MCA2101-5-3
U103A MCA2101-5-3
L109 172uH
L112 172uH
TP108
TP110
PWM_HF_L1GD
PWM_HF_H1SD
PWM_HF_H1GD
PWM_HF_L2GD
PWM_HF_H2SD
PWM_HF_H2GD
Q100 BSC117N08NS5
Q101 BSC117N08NS5
Q102 BSC117N08NS5
Q103 BSC117N08NS5
D106 S5B-M3/57T
D107 S5B-M3/57T
J103
40V @ 2.5A 100W MAX
Ripple voltage < 5%
15V...45V
VDC
VDC_OUT
VDC_RETURN
U104A MCA2101-5-3
TP112
TP113
Inrush
D100 NSV1SS400T1G
RL100B SPST-NO
RL100A SPST-NO
R119 4.7R 5W
Q105 BSS138
Q104 BSC025N08LS5ATMA1
Q106 BSC025N08LS5ATMA1
TP116
Iout_Low
R124 0R Jumper
R125 50mR
R109 50mR
Layout Note
Route directly to R330
To enable shunt measurement, remove R124
TP114
Q108 ZXMN10A08G
D104 BZT585B39T-7
D108 PMEG10010ELR
J102
Aux Power Input:
12VDC - 1A_max
2.55mm ID, 0.252" (6.40mm OD
12VDC
10V...40V
+Vint
Use TP102 and TP107 for sensing purpose only!
D101 PMEG10010ELR
D102 SMAJ36A
U100 TLE8366EV50XUMA1
L101 47uH XGL6060-473MEC
D103 V3NL63-M3/I
TP102
TP103
TP104
TP105
TP106
TP107
NT100
NT101
5V-2Amax
FB100 0603 1A
U101 TLS203B0EJV33
+3V3
+3V3 Logic Power Supply
3,3V 500mA
TLE8366EV
R102 R104 VOUT
1k 4k53 3V3
1k 7k5 5V0
DNP 0R FIXED
Title: KIT_PSC3_PFC1
Board Number: EDM0008
Size: A3
Document: Input Stage
Revision: 2.0
Drawn By: Milan Marjanovic
Date: 11.02.2026
Sheet 3 of 9
Address:

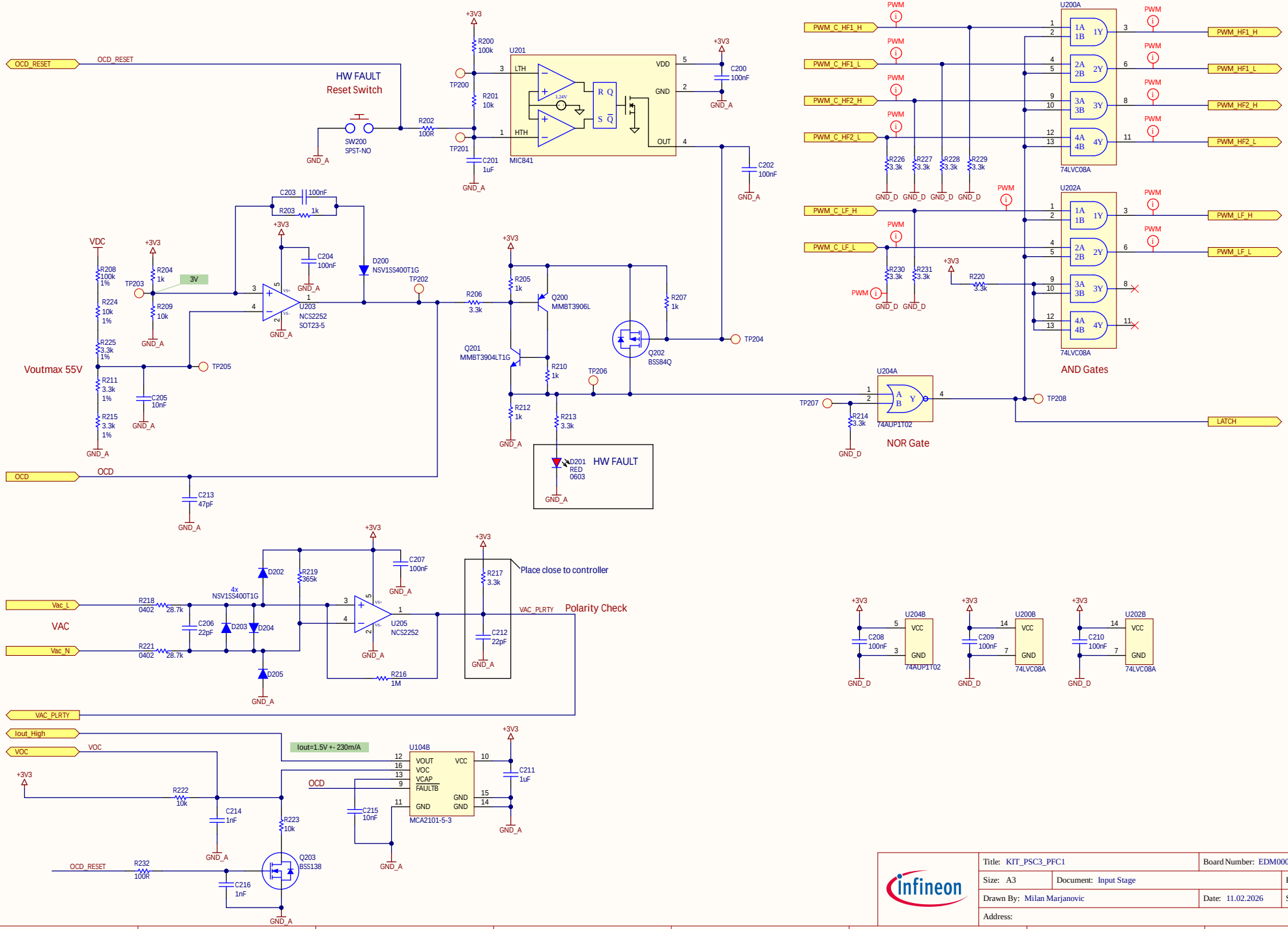

Title: KIT_PSC3_PFC1		Board Number: EDM0008	
Size: A3	Document: Input Stage		Revision: 2.0
Drawn By: Milan Marjanovic		Date: 11.02.2026	Sheet 4 of 9
Address:			

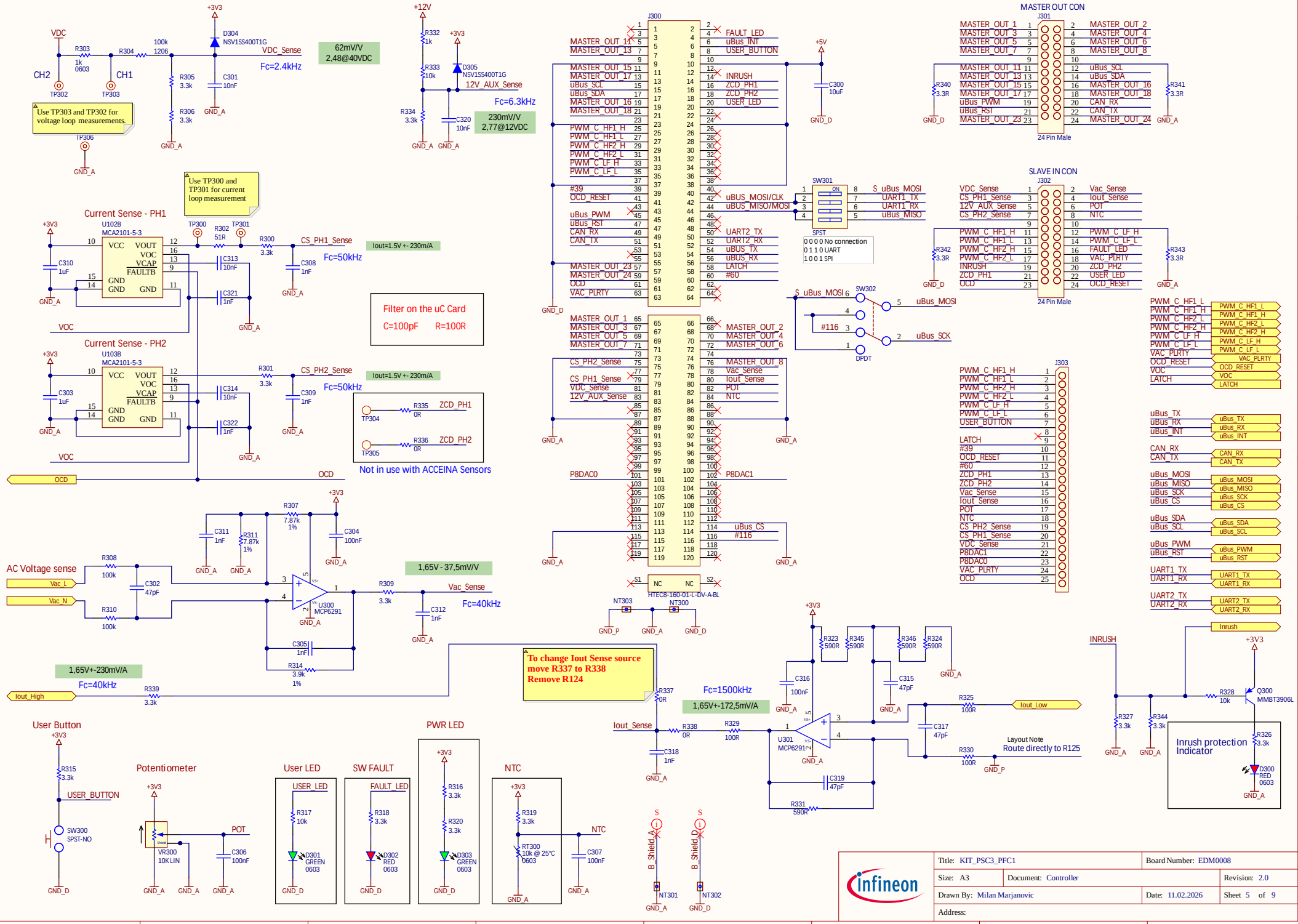

Title: KIT_PSC3_PFC1		Board Number: EDM0008	
Size: A3	Document: Controller		Revision: 2.0
Drawn By: Milan Marjanovic		Date: 11.02.2026	Sheet 5 of 9
Address:			

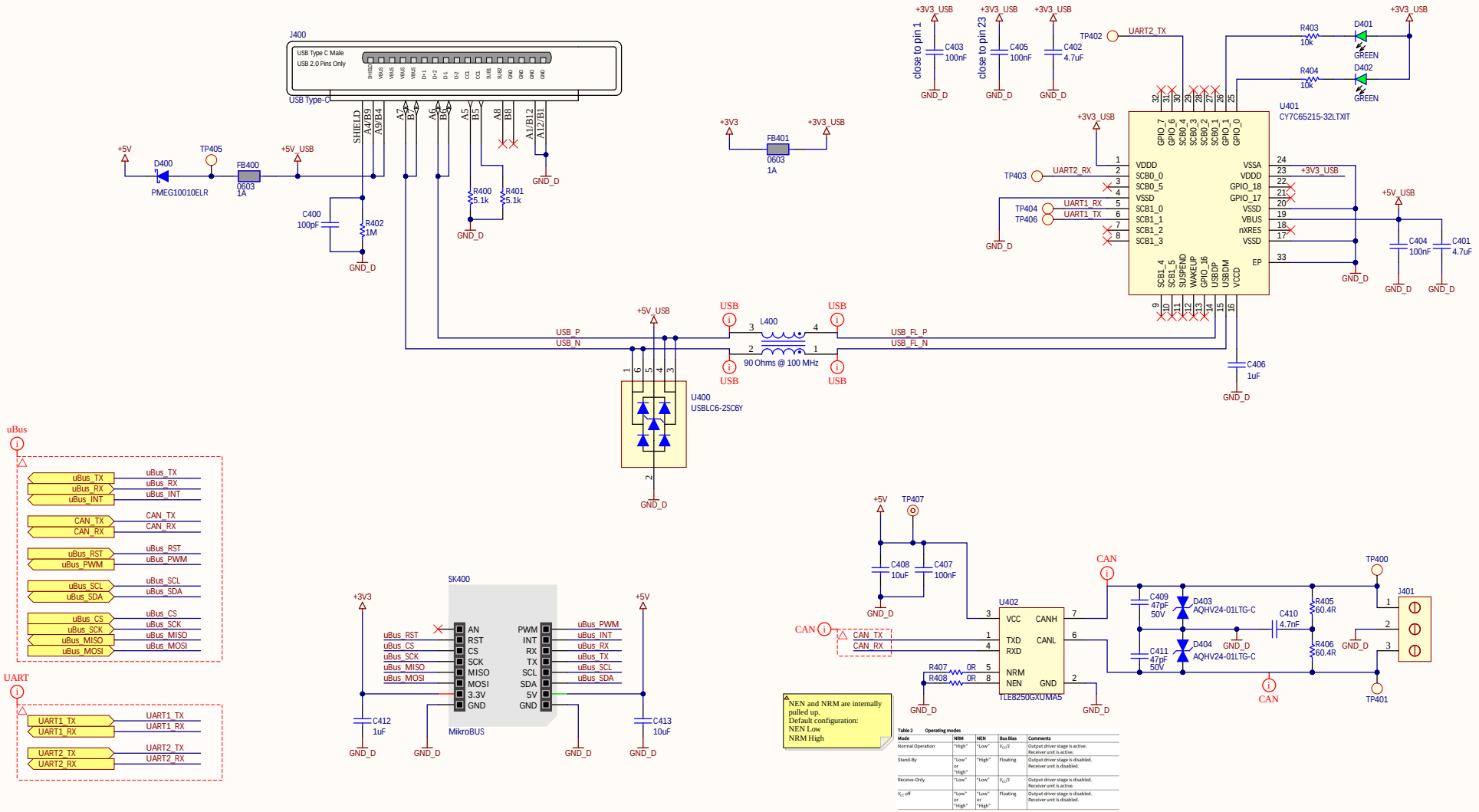

Title: KIT_PSC3_PFC1			Board Number: EDM0008
Size: A3	Document: Peripherals		Revision: 2.0
Drawn By: Milan Marjanovic		Date: 11.02.2026	Sheet 6 of 9
Address:			

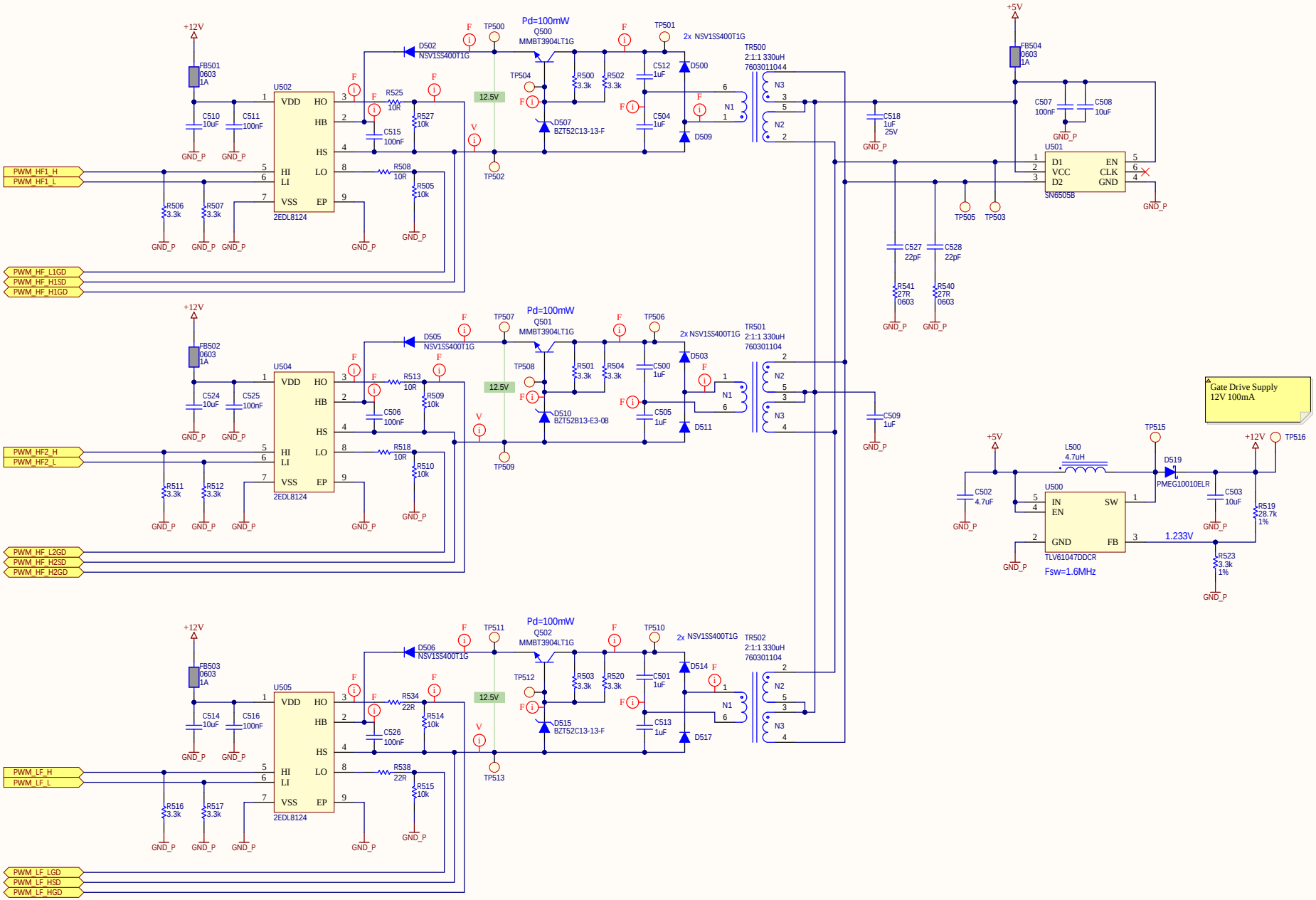

Title: KIT_PSC3_PFC1		Board Number: EDM0008	
Size: A3	Document: Power Stage		Revision: 2.0
Drawn By: Milan Marjanovic		Date: 11.02.2026	Sheet 7 of 9
Address:			

MP600



Round 9.53mm

MP601



Round 9.53mm

MP602



Round 9.53mm

MP606



Round 9.53mm

MP608



Round 9.53mm

MP603



Round 9.53mm

MP604



Round 9.53mm

MP605



Round 9.53mm

MP607



Round 9.53mm

FM600



Square

FM601



Round

FM602



Round

FM603



Square

FM604



Round

FM605



Round

PS600



12V 6W

The plug adapter must be ordered separately!

Title: KIT_PSC3_PFC1		Board Number: EDM0008	
Size: A3	Document: Mechanical		Revision: 2.0
Drawn By: Milan Marjanovic		Date: 11.02.2026	Sheet 8 of 9
Address:			

REVISION HISTORY

Date:	Version:	Comment:
07.07.2025	1.0	Prototype Release
16.11.2025	2.0	Series Production Release List of Changes Added OCD_RESET circuitry (connection assigned to J300-41, J302-24, J303-11) J300- Samtec connector- PN changed PUSH Buttons- PN changed to soft types J102- PN changed to 2.5mm SW302- Added position comments in Silk CAN H&L corrected in Silk Fuse holder footprint corrected Removed 20A Current Sensor AC/DC Adapter P/N changed to 2.5mm connector VDDA connection removed LATCH pin connection added DAC0 out added DAC1 out added WE Logo Added Small Silk changes and adaptations Vias in Pads removed

Title: KIT_PSC3_PFC1			Board Number: EDM0008
Size: A3	Document: Revision History		Revision: 2.0
Drawn By: Milan Marjanovic		Date: 11.02.2026	Sheet 9 of 9
Address:			

Board Stack Report