DPEP Resonant Converter Board

Revision: 2.2

Content:

- ☐ 1. COVER PAGE
- ☐ 2. BLOCK DIAGRAM
- ☐ 3. INPUT STAGE
- ☐ 4. CONTROLLER
- ☐ 5. POWER STAGE
- ☐ 6. MECHANICAL
- ☐ 7. REVISION HISTORY

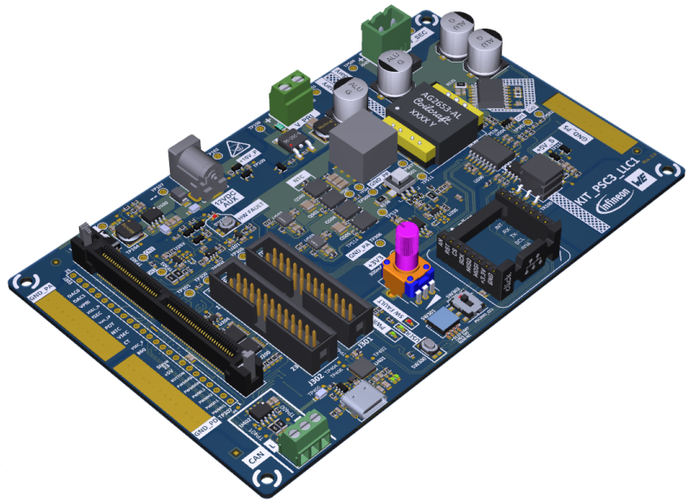

Title: DPEP Resonant Converter Board			Board Number: KIT_PSC3_LLC1
Size: A3	Document: Cover Page		Revision: 2.2
Drawn By: Milan Marjanovic		Date: 23.04.2026	Sheet 1 of 9
Address:			

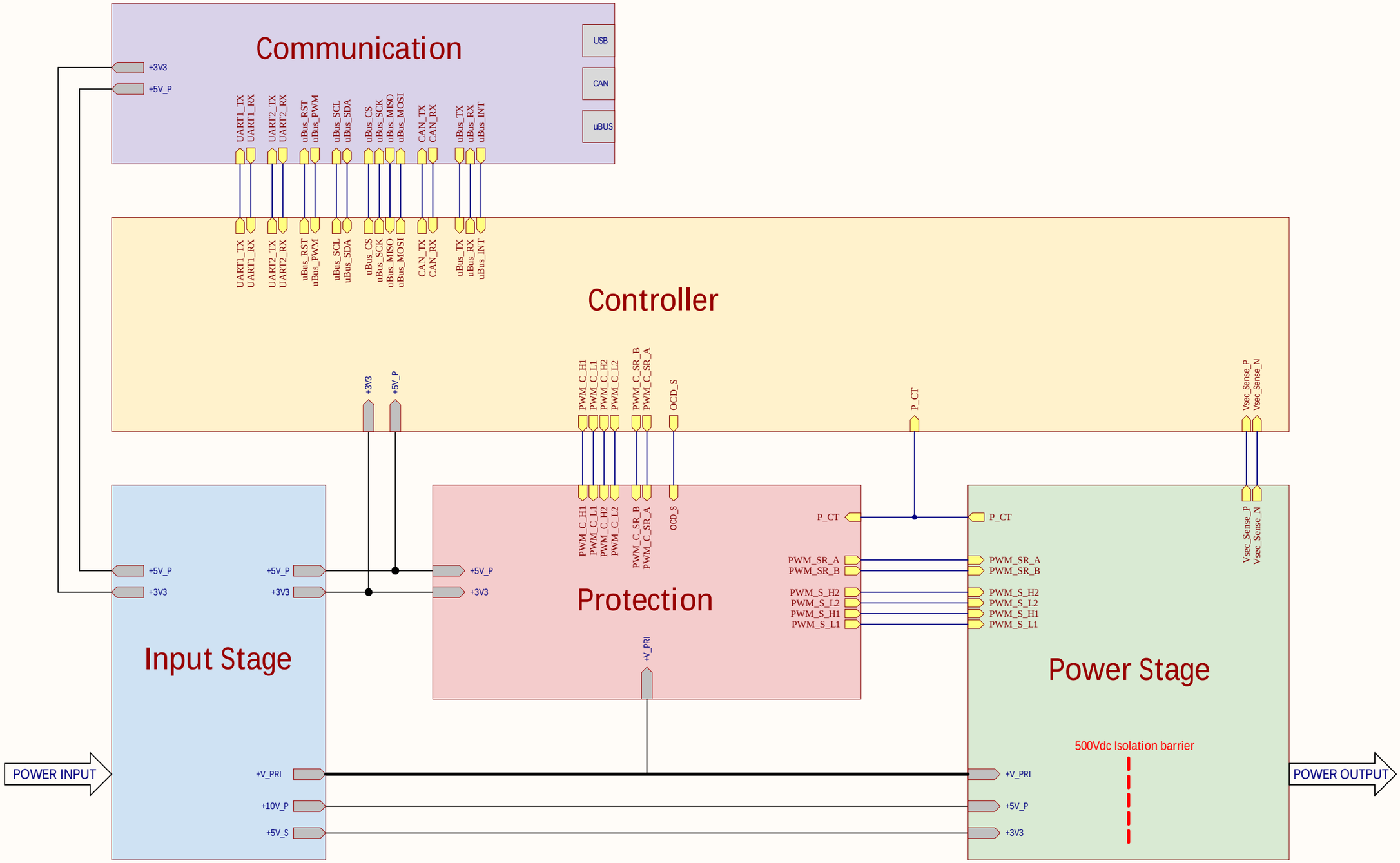

Title: DPEP Resonant Converter Board			Board Number: KIT_PSC3_LLC1
Size: A3	Document: Block Diagram		Revision: 2.2
Drawn By: Milan Marjanovic		Date: 23.04.2026	Sheet 2 of 9
Address:			

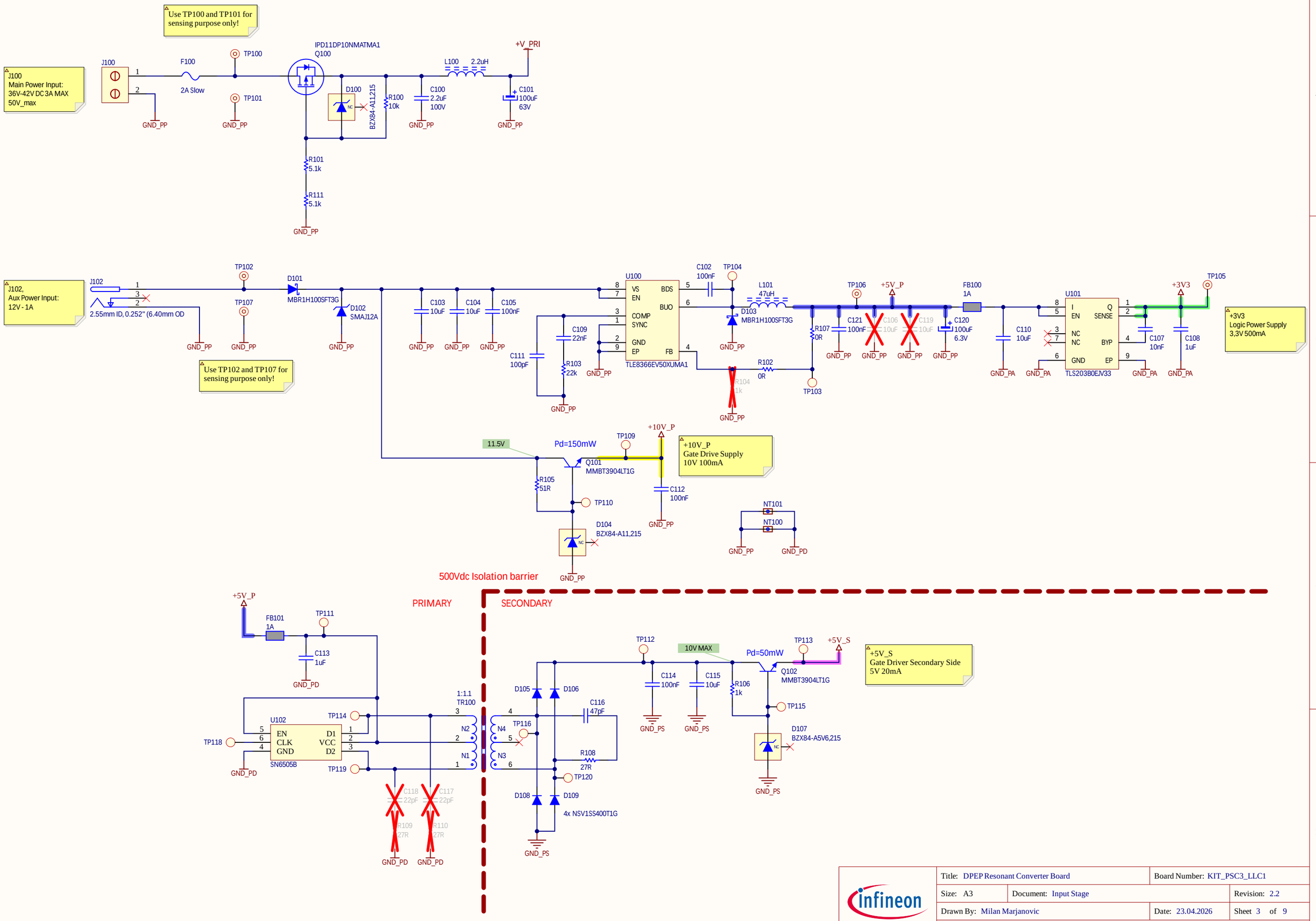
Use TP100 and TP101 for sensing purpose only!
J100
Main Power Input:
36V-42V DC 3A MAX
50V_max
J100
F100
2A Slow
TP100
TP101
IPD11DP10NMATMA1
Q100
D100
BZX84-A11,215
R100
10k
C100
2.2uF
100V
L100
2.2uH
+V_PRI
C101
100uF
63V
R101
5.1k
R111
5.1k
GND_PP
J102,
Aux Power Input:
12V - 1A
J102
2.55mm ID, 0.252" (6.40mm OD
TP102
TP107
D101
MBR1H100SFT3G
D102
SMAJ12A
Use TP102 and TP107 for sensing purpose only!
C103
10uF
C104
10uF
C105
100nF
U100
VS
EN
COMP
SYNC
GND
EP
BDS
BUO
FB
TLE8366EV50XUMA1
C102
100nF
TP104
L101
47uH
D103
MBR1H100SFT3G
C109
22nF
C111
100pF
R103
22k
R102
0R
R104
1k
TP103
TP106
+5V_P
R107
0R
C121
100nF
C106
10uF
C119
10uF
C120
100uF
6.3V
FB100
1A
U101
I
EN
NC
NC
GND
Q
SENSE
BYP
EP
TLS203B0EJV33
C110
10uF
TP105
+3V3
C107
10nF
C108
1uF
+3V3
Logic Power Supply
3,3V 500mA
11.5V
Pd=150mW
Q101
MMBT3904LT1G
R105
51R
TP109
+10V_P
+10V_P
Gate Drive Supply
10V 100mA
C112
100nF
TP110
D104
BZX84-A11,215
NT101
NT100
500Vdc Isolation barrier
PRIMARY
SECONDARY
FB101
1A
TP111
C113
1uF
+5V_P
1:1.1
TR100
U102
EN
CLK
GND
D1
VCC
D2
SN6505B
TP114
TP118
TP119
C118
22pF
C117
22pF
R109
27R
R110
27R
D105
D106
D108
D109
4x NSV1SS400T1G
TP116
C116
47pF
R108
27R
TP120
TP112
10V MAX
Pd=50mW
C114
100nF
C115
10uF
R106
1k
Q102
MMBT3904LT1G
TP113
+5V_S
+5V_S
Gate Driver Secondary Side
5V 20mA
TP115
D107
BZX84-A5V6,215
GND_PP
GND_PD
GND_PA
GND_PS
Title: DPEP Resonant Converter Board
Board Number: KIT_PSC3_LLC1
Size: A3
Document: Input Stage
Revision: 2.2
Drawn By: Milan Marjanovic
Date: 23.04.2026
Sheet 3 of 9
Address:

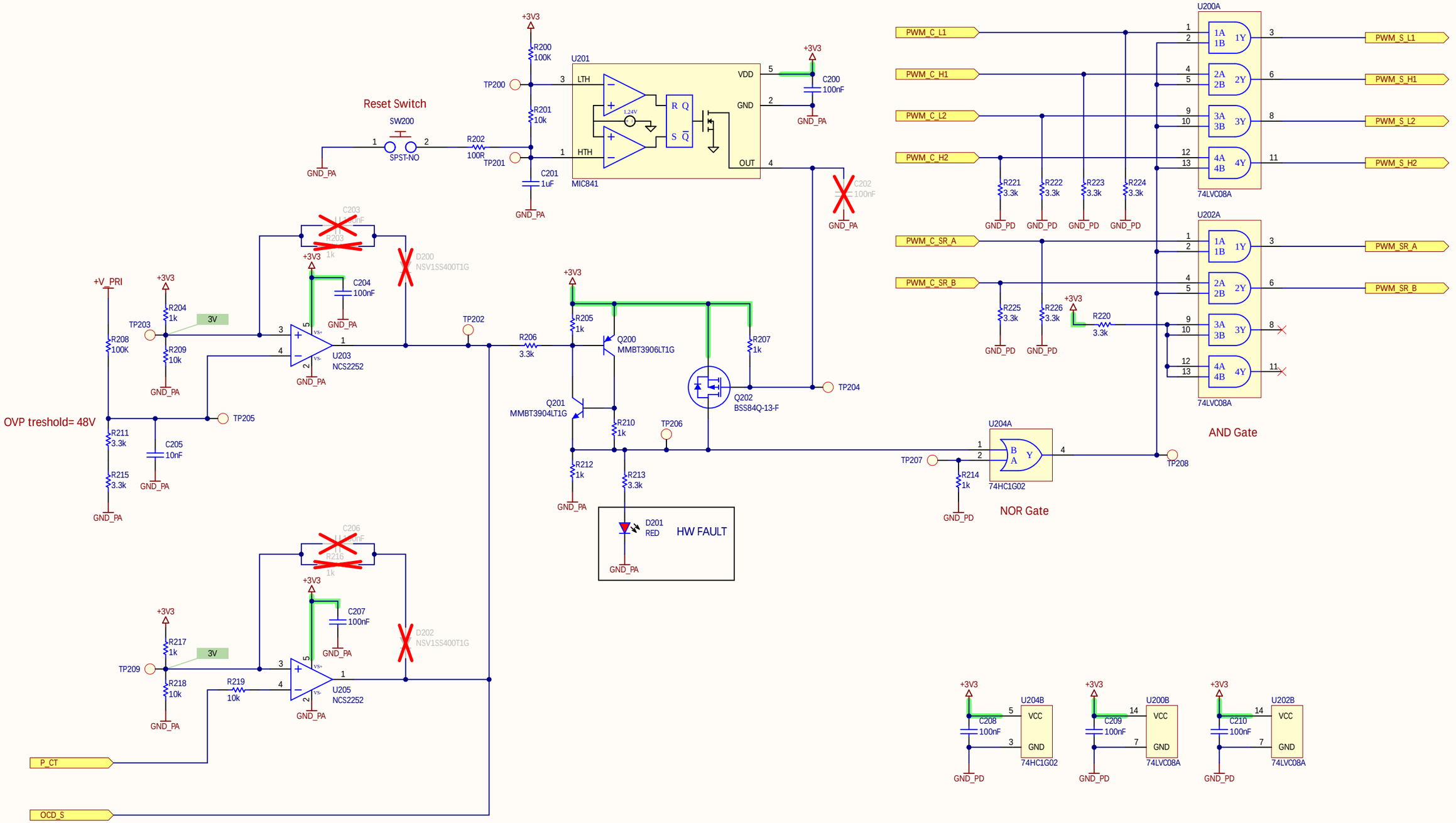

Title: DPEP Resonant Converter Board			Board Number: KIT_PSC3_LLC1
Size: A3	Document: Input Stage		Revision: 2.2
Drawn By: Milan Marjanovic		Date: 23.04.2026	Sheet 4 of 9
Address:			

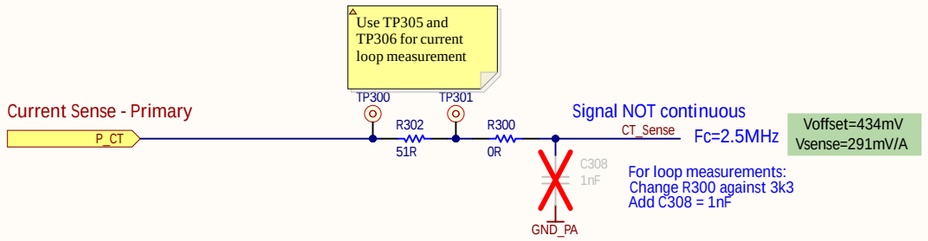

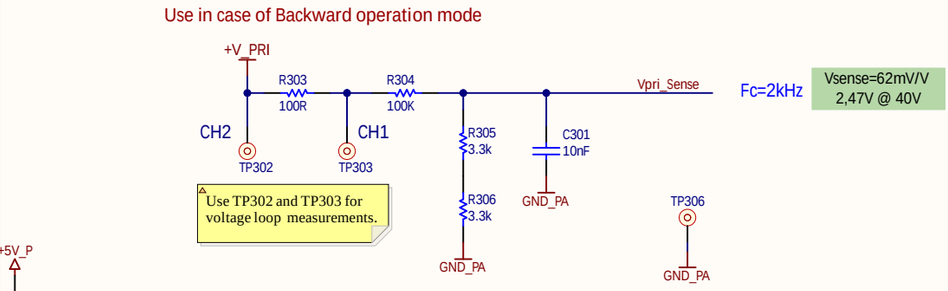

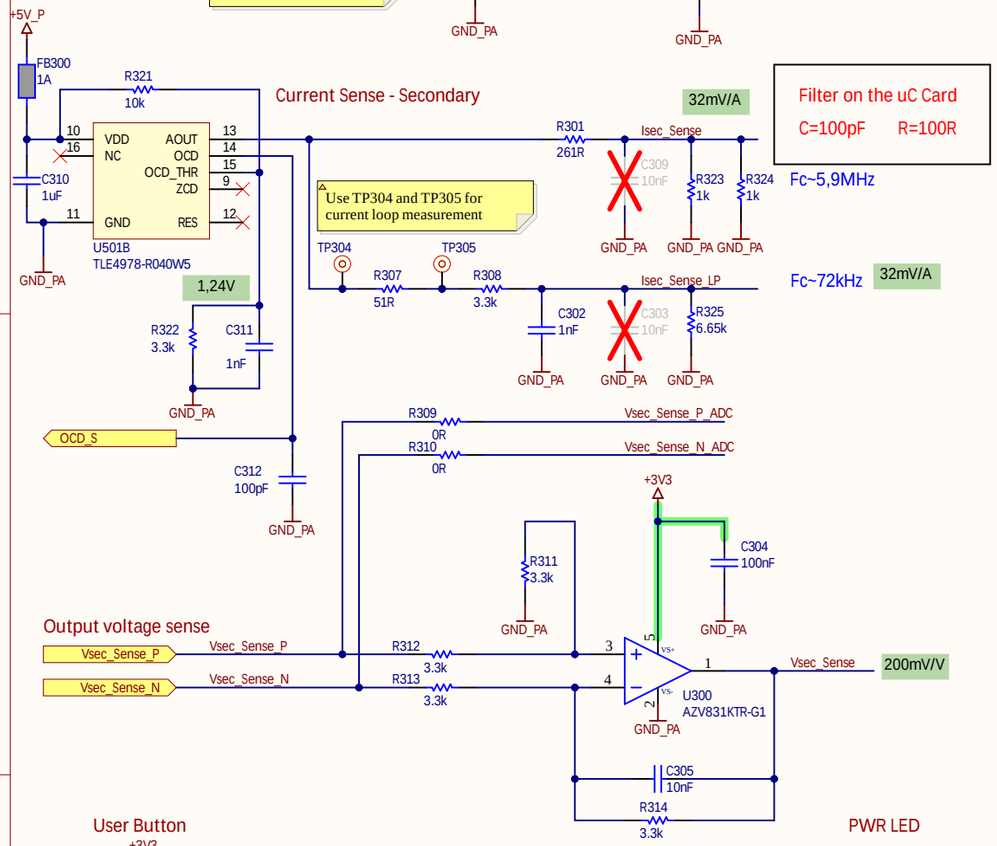

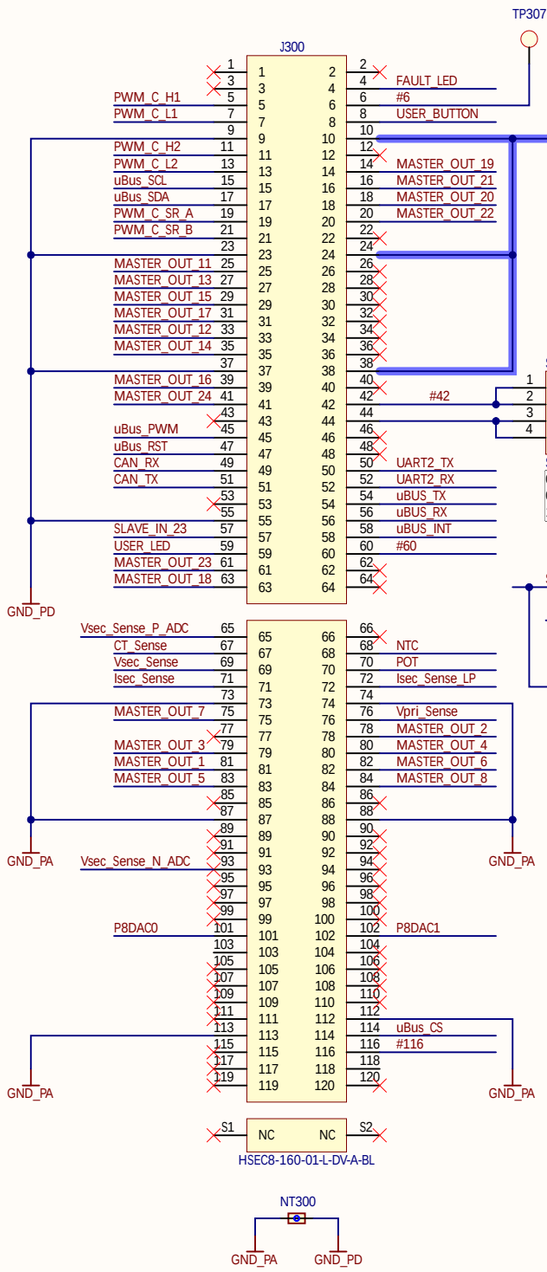

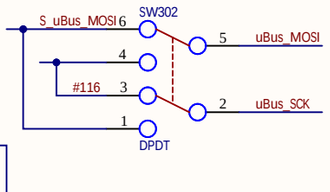

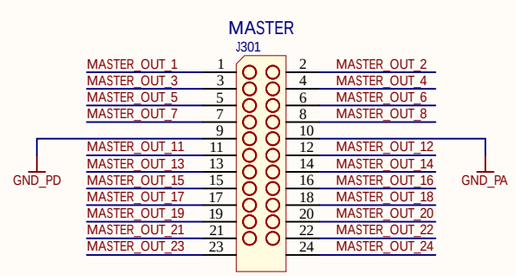

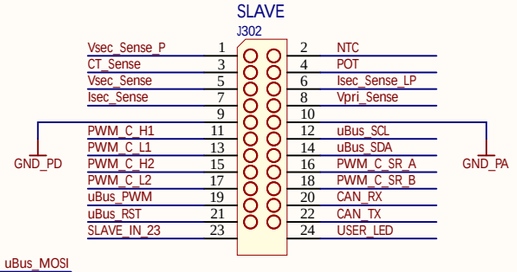

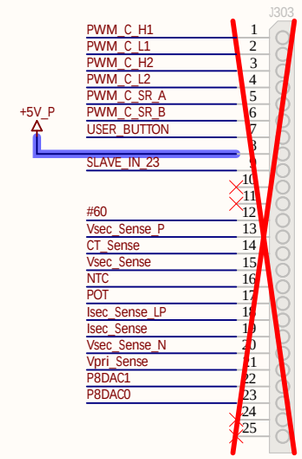

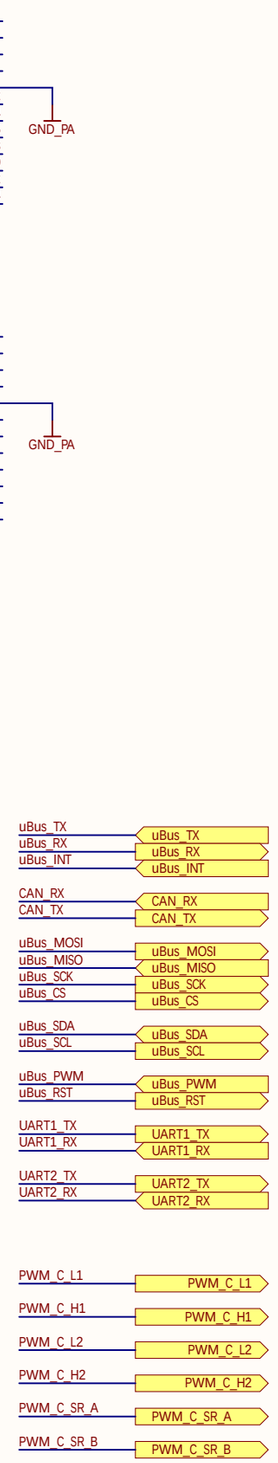

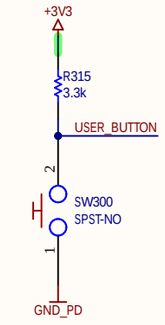

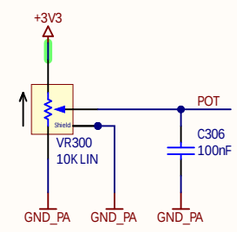

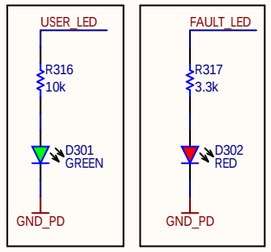

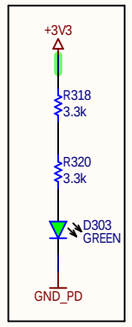

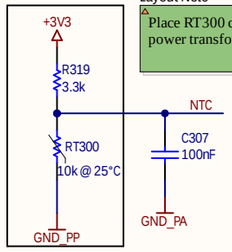

Layout Note
Place RT300 close to power transformer.

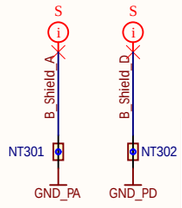

Title: DPEP Resonant Converter Board			Board Number: KIT_PSC3_LLC1
Size: A3	Document: Controller		Revision: 2.2
Drawn By: Milan Marjanovic		Date: 23.04.2026	Sheet 5 of 9
Address:			

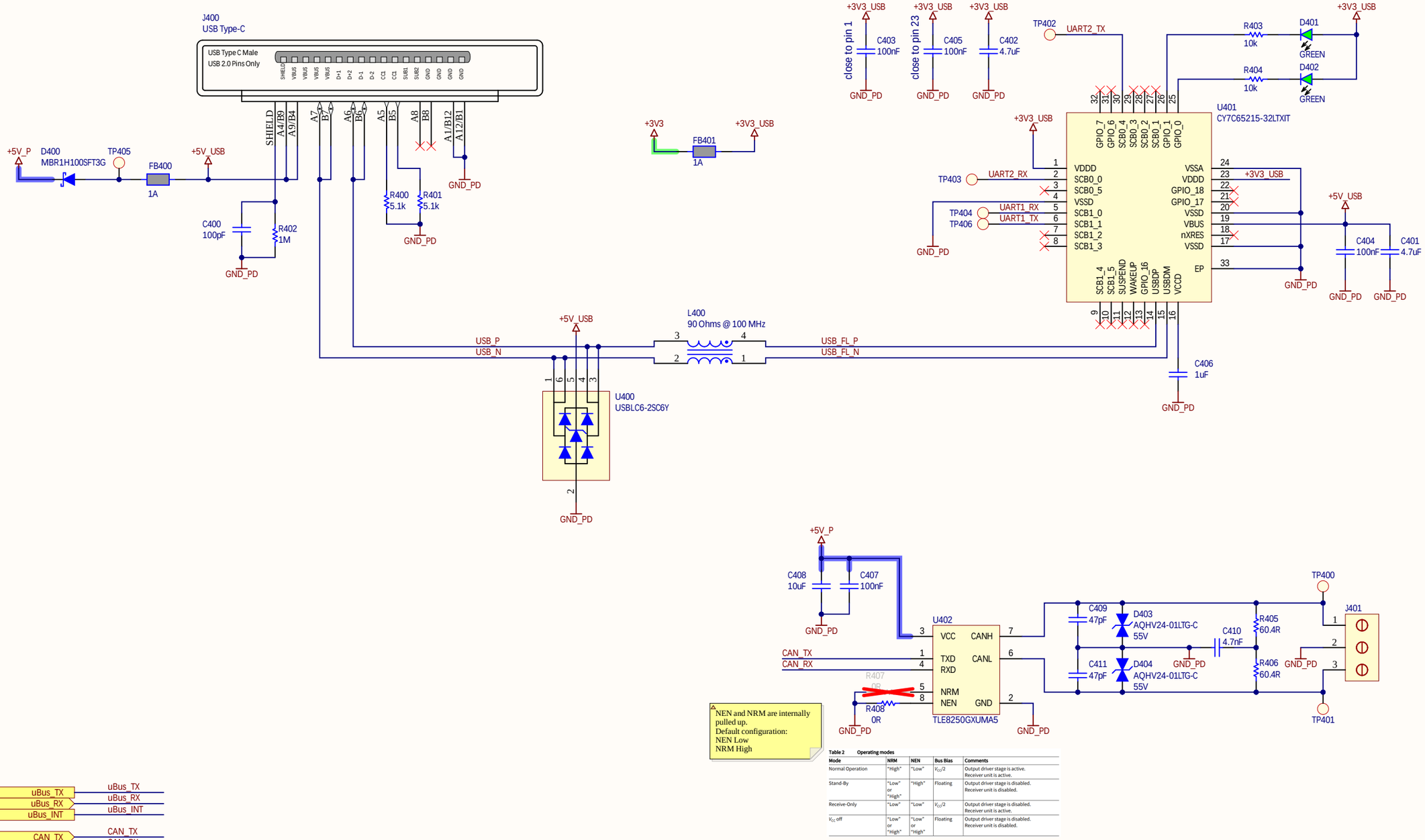

Table 2 Operating modes

Mode	NRM	NEN	Bus Bias	Comments
Normal Operation	"High"	"Low"	$V_{CC}/2$	Output driver stage is active. Receiver unit is active.
Stand-By	"Low" or "High"	"High"	Floating	Output driver stage is disabled. Receiver unit is disabled.
Receive-Only	"Low"	"Low"	$V_{CC}/2$	Output driver stage is disabled. Receiver unit is active.
V_{CC} off	"Low" or "High"	"Low" or "High"	Floating	Output driver stage is disabled. Receiver unit is disabled.

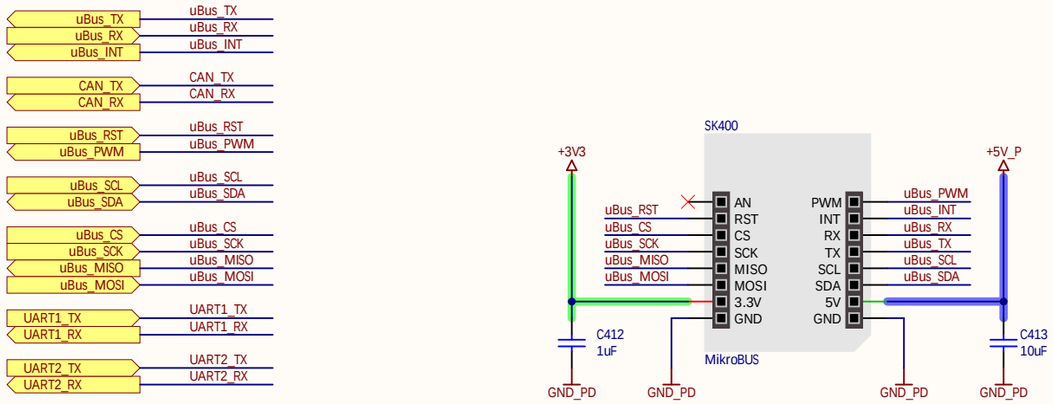

Title: DPEP Resonant Converter Board			Board Number: KIT_PSC3_LLC1
Size: A3	Document: Peripherals		Revision: 2.2
Drawn By: Milan Marjanovic		Date: 23.04.2026	Sheet 6 of 9
Address:			

500Vdc Isolation barrier

PRIMARY

SECONDARY

U500 AMC3311DWER

DCDC_IN, DCDC_GND, DIAG, LDO_OUT, VDD, OUTP, OUTN, GND

DCDC_OUT, DCDC_HGND, HLDO_IN, NC, HLDO_OUT, IN, HGND, HGND

+3V3, FB500 1A, TP500, C502 1uF, C503 100nF, GND_PA

C500 1uF, C504 100nF, C501 1nF, R503 3.3k, 2V MAX

R500 3.3k, R501 3.3k, R502 100R, R504 3.3k, R505 3.3k

+V_SEC, CH1, CH2, TP501, TP502, GND_PS

Use TP502 and TP501 for voltage loop measurements

200mV/V

Vsec_Sense_P

Vsec_Sense_N

+V_PRI

+10V_P, FB501 1A

U502 2EDL8124

VDD, HB, HS, HI, LI, VSS, HO, LO, EP

C506 2.2uF, C507 100nF, C510 10uF, C511 100nF, C512 100nF

R508 3.9R, R509 10k, R510 3.9R, R513 10k, R511 3.3k, R512 3.3k

Q500 BSC117N08NS5, Q501 BSC117N08NS5

C508 12nF, C509 12nF, C513 12nF

TP503, TP504, TP505, TP506, TP507

L500 2.6uH 7A

PWM_S_H1, PWM_S_L1

C514 10nF 500V

TR500 12.5uH 7:1:1

TP511

TP515

Solder 1mm silver wire for current measurements

+V_SEC 5V @ 10A 50W MAX Ripple voltage < 2%

L501 400nH, TP508, J500, C522 10uF, TP512

R535 0R, U501A TLE4978-R040W5

TP516

Q503 BSZ031NE2LS5, Q502 BSZ031NE2LS5

TP509, TP510

C505 1.5nF, C523 1.5nF

R533 2.2R, R515 2.2R, R516 10k, R519 27R, R534 2.2R, R517 2.2R, R518 10k, R520 27R

U504, U505 1EDN7511BXUSA1

OUT_SRC, OUT_SNK, VDD, GND, IN+, IN-

+5V_S, C527 1uF, C528 1uF

C515 100nF, C516 10uF, C517 560uF 16V, C518 560uF 16V, C519 560uF 16V

S, B Shield SP, NT500

+V_PRI

+10V_P, FB502 1A

U503 2EDL8124

C520 2.2uF, C521 100nF, C524 10uF, C525 100nF, C526 100nF

R514 3.9R, R521 10k, R522 3.9R, R525 10k, R523 3.3k, R524 3.3k

Q504 BSC117N08NS5, Q505 BSC117N08NS5

TP513, TP514

Solder 1mm silver wire for current measurements

R536 0R

TR501 CST1-100L

PWM_S_H2, PWM_S_L2

D500, D501, D502, D503 4x NSV1SS400T1G

Current Sense Primary

P_CT

Voffset=434mV

Vsense=291mV/A

D504 NSV1SS400T1G

R530 3.3k, R531 1k, R532 1k, C529 1nF, R526 1k, R527 30R, C532 10nF

+3V3, FB503 1A, C530 100nF

U506 2DIB0400FXUMA1

VDD1, INA, INB, GND1, VDD2, OUTA, OUTB, GND2

C531 100nF

PWM_SR_A

PWM_SR_B

R528 3.3k, R529 3.3k

GND_PP, GND_PS, GND_PA, GND_PD

Title: DPEP Resonant Converter Board			Board Number: KIT_PSC3_LLC1
Size: A3	Document: Power Stage		Revision: 2.2
Drawn By: Milan Marjanovic		Date: 23.04.2026	Sheet 7 of 9
Address:			

MP600



Round 9.53mm

MP601



Round 9.53mm

MP602



Round 9.53mm

MP606



Round 9.53mm

MP609



Round 9.53mm

MP603



Round 9.53mm

MP604



Round 9.53mm

MP605



Round 9.53mm

MP607



Round 9.53mm

MP608



Round 9.53mm

FM600



Square

FM601



Round

FM602



Round

FM603



Square

FM604



Round

FM605



Round

PS600



12V 6W

J600



20A
691351500002

61202423021



J601

61202423021



J602

63912415521

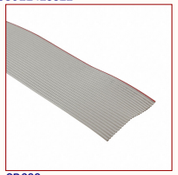

CB600

63912415521CAB

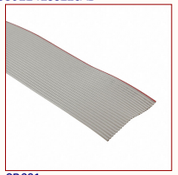

CB601

Title: DPEP Resonant Converter Board		Board Number: KIT_PSC3_LLC1	
Size: A3	Document: Mechanical		Revision: 2.2
Drawn By: Milan Marjanovic		Date: 23.04.2026	Sheet 8 of 9
Address:			

REVISION HISTORY

Date:	Version:	Comment:
07.07.2025	1.0	Initial Release
08.09.2025	1.1	R106 changed from 180R to 1k R102 changed from 7.5k to 0R R107 changed from 51R to 0R R104 set to DNP Added pull-down resistors R221..R226 U506 replaced to 2DIB0400FXUMA1
05.01.2026	2.0	U200 and U202 footprint updated Removed J102 and note for reverse bias protection J102 changed to 2.55mm type Push buttons changed to soft ones VDDA from test pin removed Vdd_Sense on test pin added C106-> DNP J303-> DNP C532-> Changed ref. GND potential to GND_PA J500 changed type TR100 cnahged against- 750313734 Added additional LC Filter at the output L501 & C522 Current sensor at the output changed against TLE4978 Silkscreen improvements Pad in via removed
16.04.2026	2.1	R508, R510, R514, R522 changed to 3R9 R515, R517, R533, R534 changed to 2R2 R527 changed to 30R R322 changed to 4k7 Removed object links from notes
23.04.2026	2.2	R322 changed to 3k3

Title: DPEP Resonant Converter Board			Board Number: KIT_PSC3_LLC1
Size: A3	Document: Revision History		Revision: 2.2
Drawn By: Milan Marjanovic		Date: 23.04.2026	Sheet 9 of 9
Address:			