KIT_FX5N_FMC_001

EZ-USB™ FX5N DVK - BASE BOARD

CONTENTS

PAGE	DESCRIPTION
01	TITLE & TABLE OF CONTENTS
02	BLOCK DIAGRAM
03	POWER SUPPLY
04	USB
05	POWER
06	FLASH
07	PORT
08	GPIO
09	FMC HEADER - 1
10	FMC HEADER - 2
11	GPIO INTERFACE CONNECTOR
12	FMC RECEPTACLE - 1
13	FMC RECEPTACLE - 2
14	ACCESSORIES
15	REVISION HISTORY

Drawing Numbers	
PCBA	121-60767-01
PCB	600-60720-01
FAB DRW	610-60720-01
ASSY DRW	620-60767-01
SCH DRW	630-60767-01

Legal Disclaimer :
The information given in this document shall in no event be regarded as a guarantee of conditions or characteristics. With respect to any examples or hints given herein, any typical values stated herein and/or any information regarding the application of the device, Infineon Technologies hereby disclaims any and all warranties and liabilities of any kind, including without limitation, warranties of non-infringement of intellectual property rights of any third party.

SCH Title : BASE BOARD

Page Title: TITLE & TABLE OF CONTENTS

Size	Document Number	Drawn By	Approved By	Rev
A4	630-60767-01	MISHRASANATK	RAJA	01

Date: Thursday, February 13, 2025 Sheet 1 of 15

BLOCK DIAGRAM

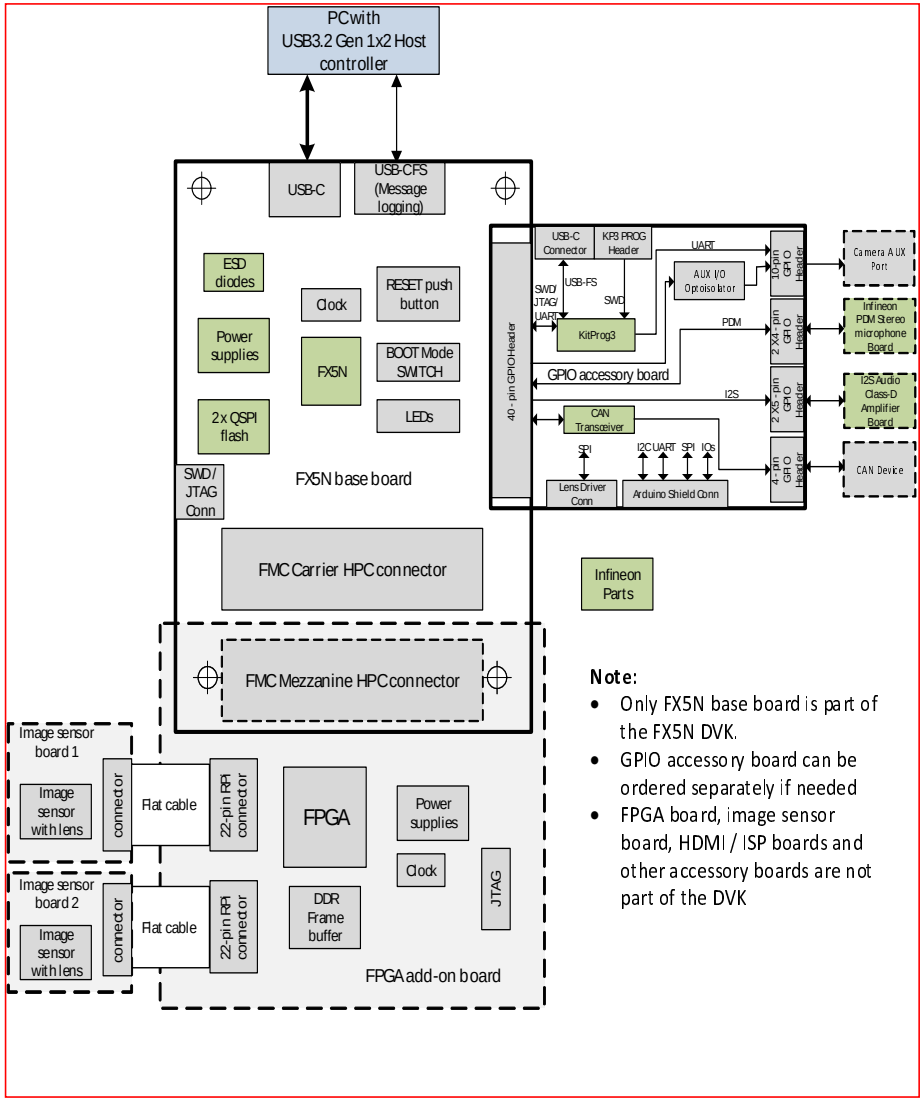

Note:

- Only FX5N base board is part of the FX5N DVK.
- GPIO accessory board can be ordered separately if needed
- FPGA board, image sensor board, HDMI / ISP boards and other accessory boards are not part of the DVK

Legal Disclaimer :

The information given in this document shall in no event be regarded as a guarantee of conditions or characteristics. With respect to any examples or hints given herein, any typical values stated herein and/or any information regarding the application of the device, Infineon Technologies hereby disclaims any and all warranties and liabilities of any kind, including without limitation, warranties of non-infringement of intellectual property rights of any third party.

SCH Title : BASE BOARD				
Page Title: BLOCK DIAGRAM				
Size	Document Number	Drawn By	Approved By	Rev
A4	630-60767-01	MISHRASANATK	RAJA	01
Date: Thursday, February 13, 2025		Sheet 2 of 15		

POWER SUPPLY

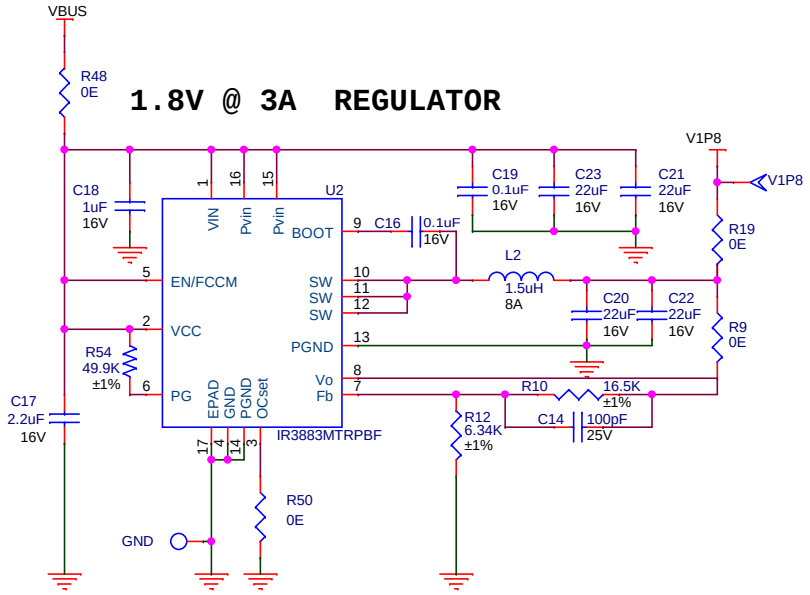

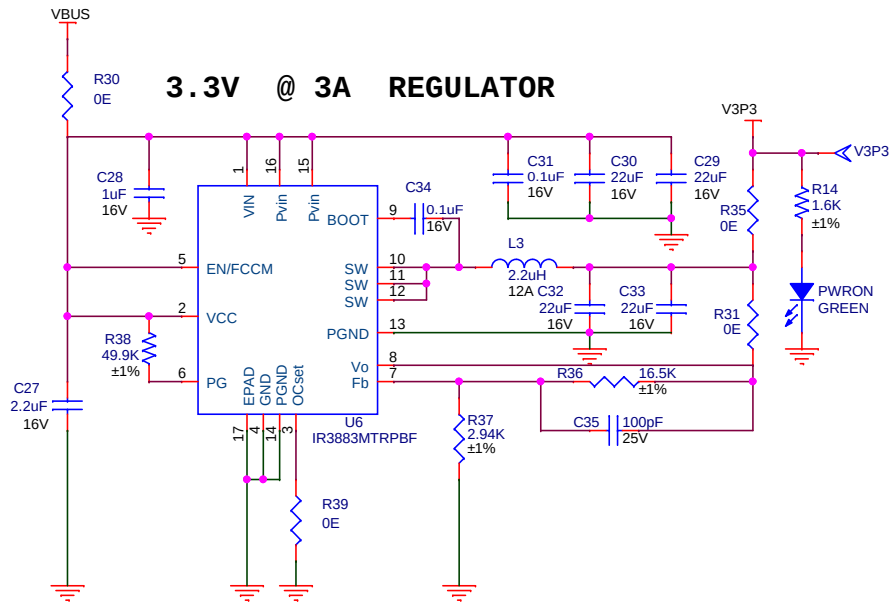

3.3V / 1.8V SUPPLY HEADER

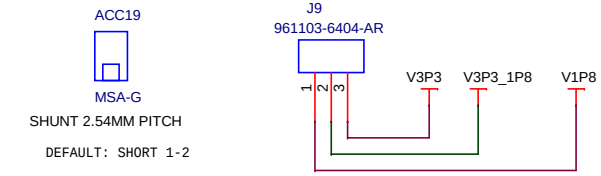

Legal Disclaimer :
The information given in this document shall in no event be regarded as a guarantee of conditions or characteristics. With respect to any examples or hints given herein, any typical values stated herein and/or any information regarding the application of the device, Infineon Technologies hereby disclaims any and all warranties and liabilities of any kind, including without limitation, warranties of non-infringement of intellectual property rights of any third party.

SCH Title : BASE BOARD				
Page Title: POWER SUPPLY				
Size	Document Number	Drawn By	Approved By	Rev
A4	630-60767-01	MISHRASANATK	RAJA	01
Date: Thursday, February 13, 2025		Sheet 3 of 15		

USB 3.2 Gen 2 CONNECTOR

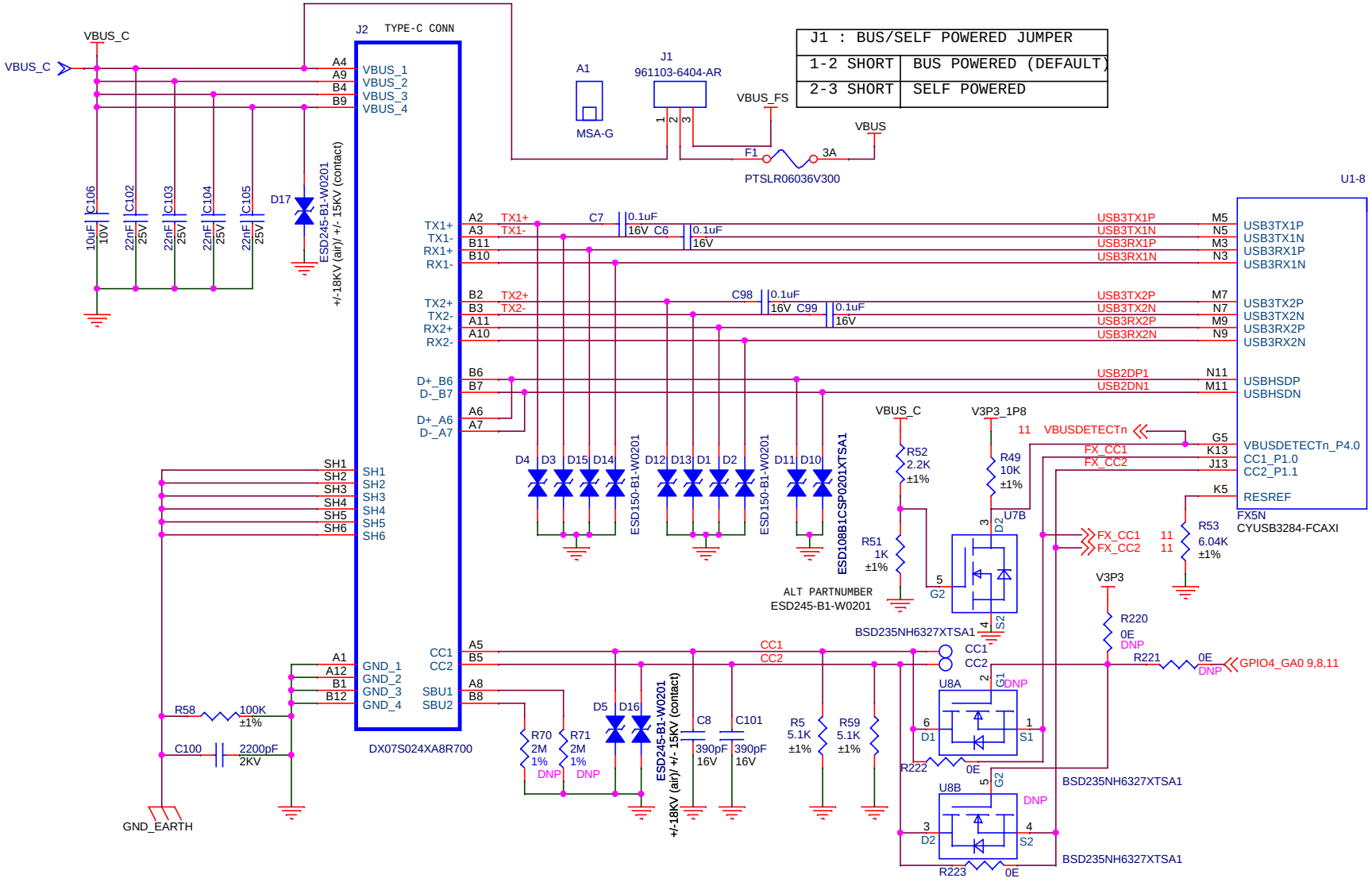

Legal Disclaimer :
The information given in this document shall in no event be regarded as a guarantee of conditions or characteristics. With respect to any examples or hints given herein, any typical values stated herein and/or any information regarding the application of the device, Infineon Technologies hereby disclaims any and all warranties and liabilities of any kind, including without limitation, warranties of non-infringement of intellectual property rights of any third party.

SCH Title : BASE BOARD				
Page Title: USB				
Size	Document Number	Drawn By	Approved By	Rev
A4	630-60767-01	MISHRASANATK	RAJA	01
Date: Thursday, February 13, 2025		Sheet 4 of 15		

POWER

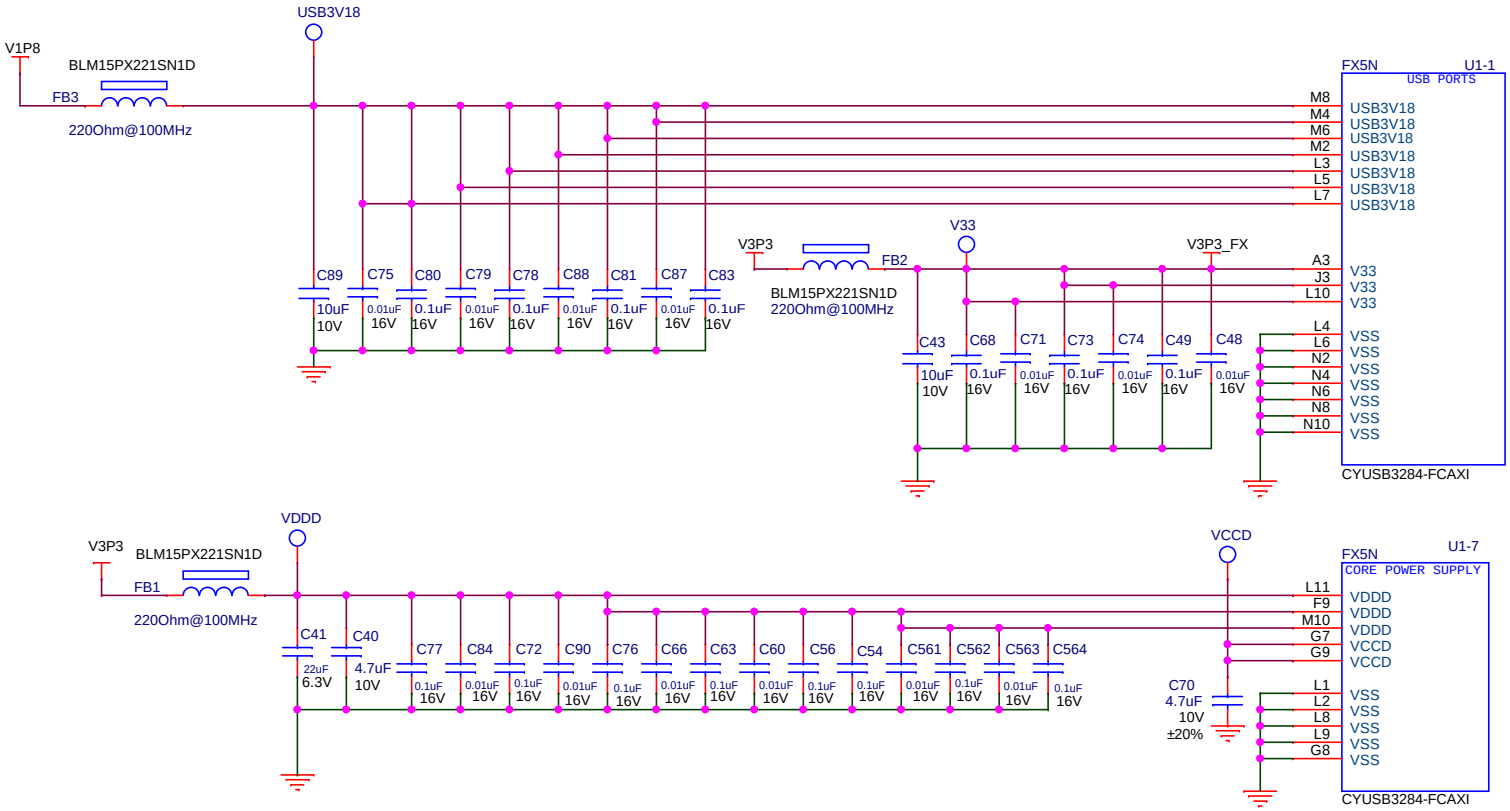

Legal Disclaimer :

The information given in this document shall in no event be regarded as a guarantee of conditions or characteristics. With respect to any examples or hints given herein, any typical values stated herein and/or any information regarding the application of the device, Infineon Technologies hereby disclaims any and all warranties and liabilities of any kind, including without limitation, warranties of non-infringement of intellectual property rights of any third party.

SCH Title : BASE BOARD				
Page Title: POWER				
Size	Document Number	Drawn By	Approved By	Rev
A4	630-60767-01	MISHRASANATK	RAJA	01
Date: Thursday, February 13, 2025		Sheet 5 of 15		

SPI FLASH AND CLOCK

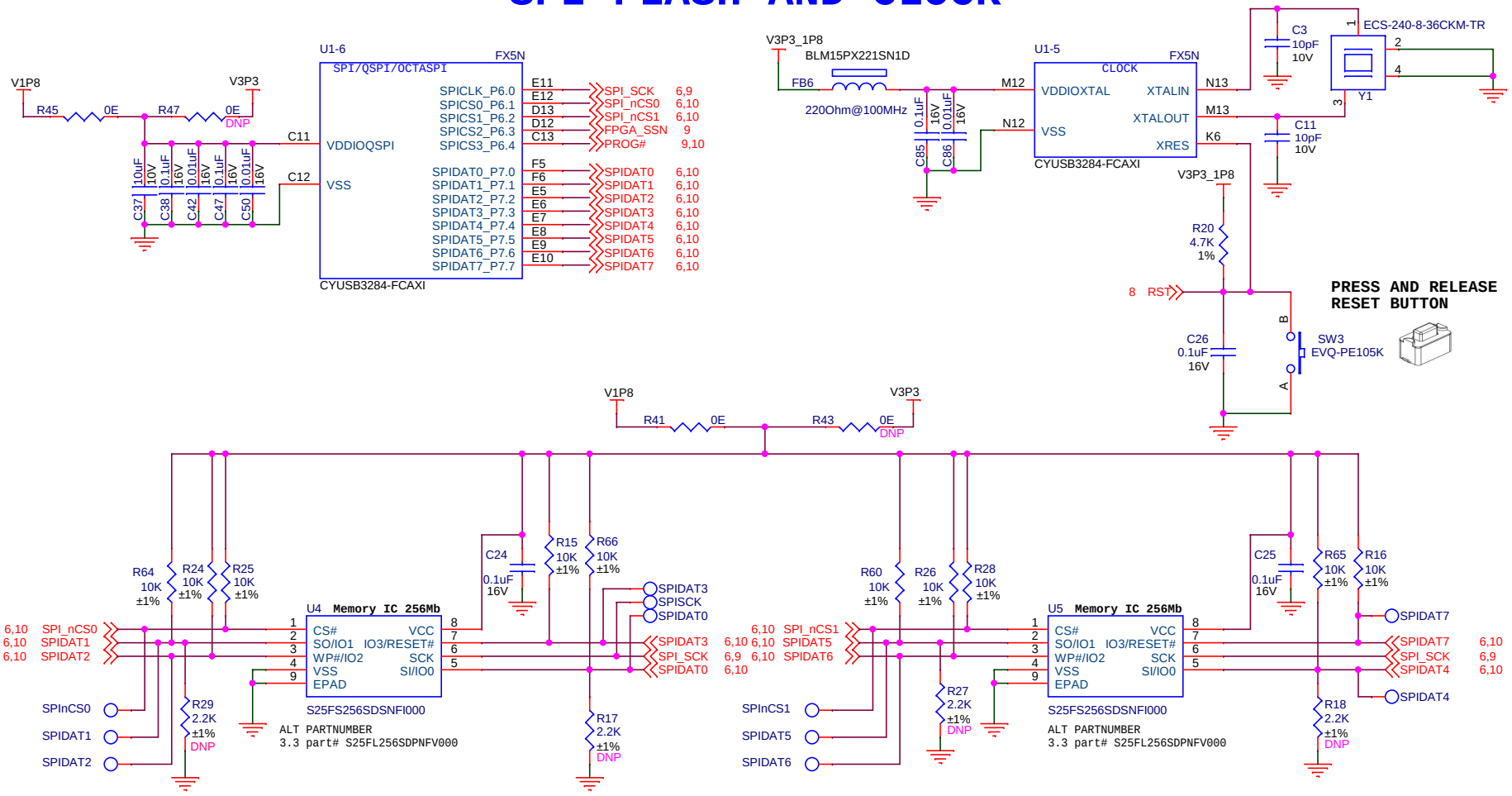

Legal Disclaimer :

The information given in this document shall in no event be regarded as a guarantee of conditions or characteristics. With respect to any examples or hints given herein, any typical values stated herein and/or any information regarding the application of the device, Infineon Technologies hereby disclaims any and all warranties and liabilities of any kind, including without limitation, warranties of non-infringement of intellectual property rights of any third party.

SCH Title : BASE BOARD				
Page Title: FLASH & CLOCK				
Size	Document Number	Drawn By	Approved By	Rev
A4	630-60767-01	MISHRASANATK	RAJA	01
Date: Thursday, February 13, 2025		Sheet 6 of 15		

LVDS/LVCMOS INTERFACE

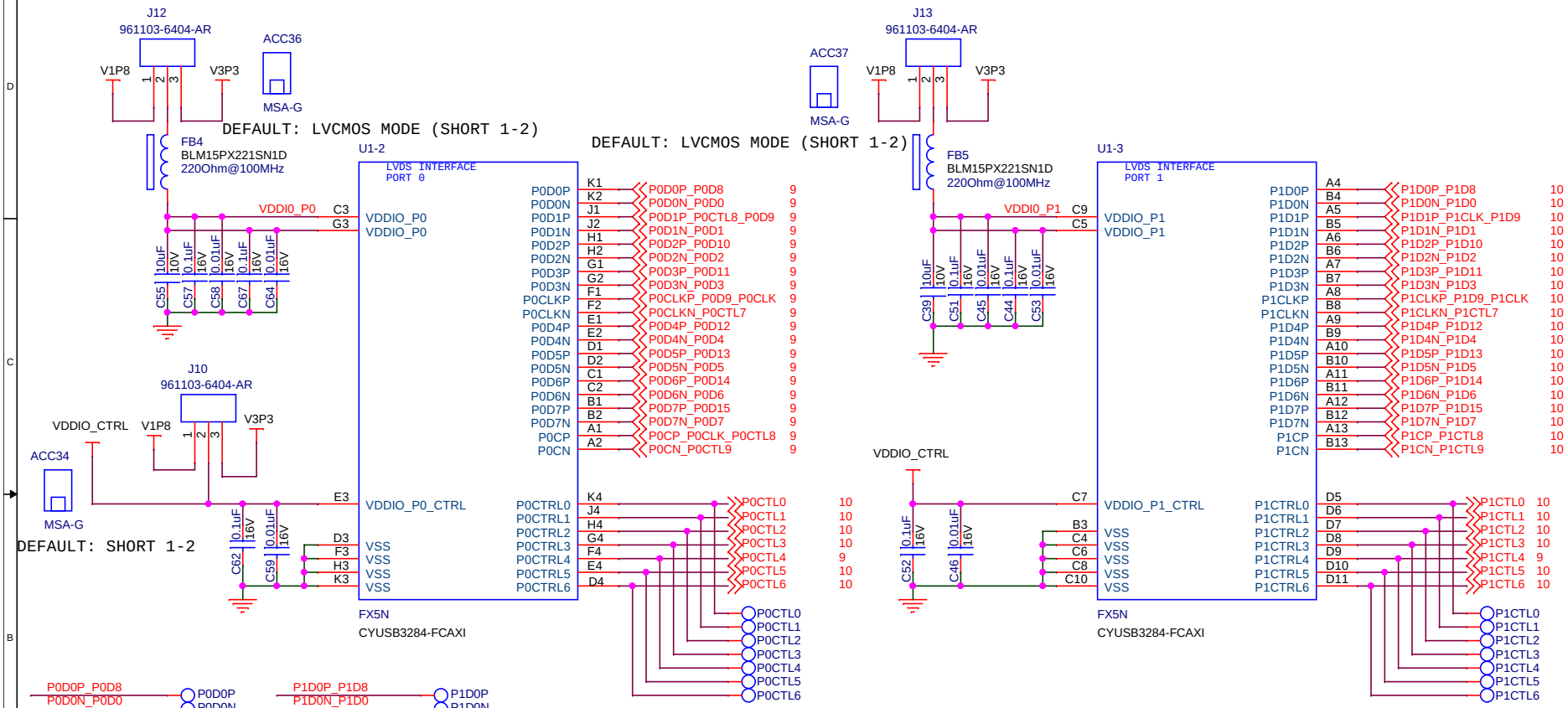

NOTE:

1. All signals to be length matched with clock
2. For LVDS MODE operation, VDDIO_P0 and VDDIO_P1 must be kept at 3.3V.
3. VDDIO_P0_CTRL and VDDIO_P1_CTRL can be at either 1.8V or 3.3V depending on the desired CTRL signal logic level.
4. For LVCMOS MODE operation, VDDIO_P0 and VDDIO_P1 can be operated at either 1.8V or 3.3V

Legal Disclaimer :

The information given in this document shall in no event be regarded as a guarantee of conditions or characteristics. With respect to any examples or hints given herein, any typical values stated herein and/or any information regarding the application of the device, Infineon Technologies hereby disclaims any and all warranties and liabilities of any kind, including without limitation, warranties of non-infringement of intellectual property rights of any third party.

SCH Title : BASE BOARD				
Page Title: LVDS				
Size	Document Number	Drawn By	Approved By	Rev
A4	630-60767-01	MISHRASANATK	RAJA	01
Date: Thursday, February 13, 2025		Sheet 7 of 15		

GPIO AND LOW SPEED PERIPHERAL INTERFACE

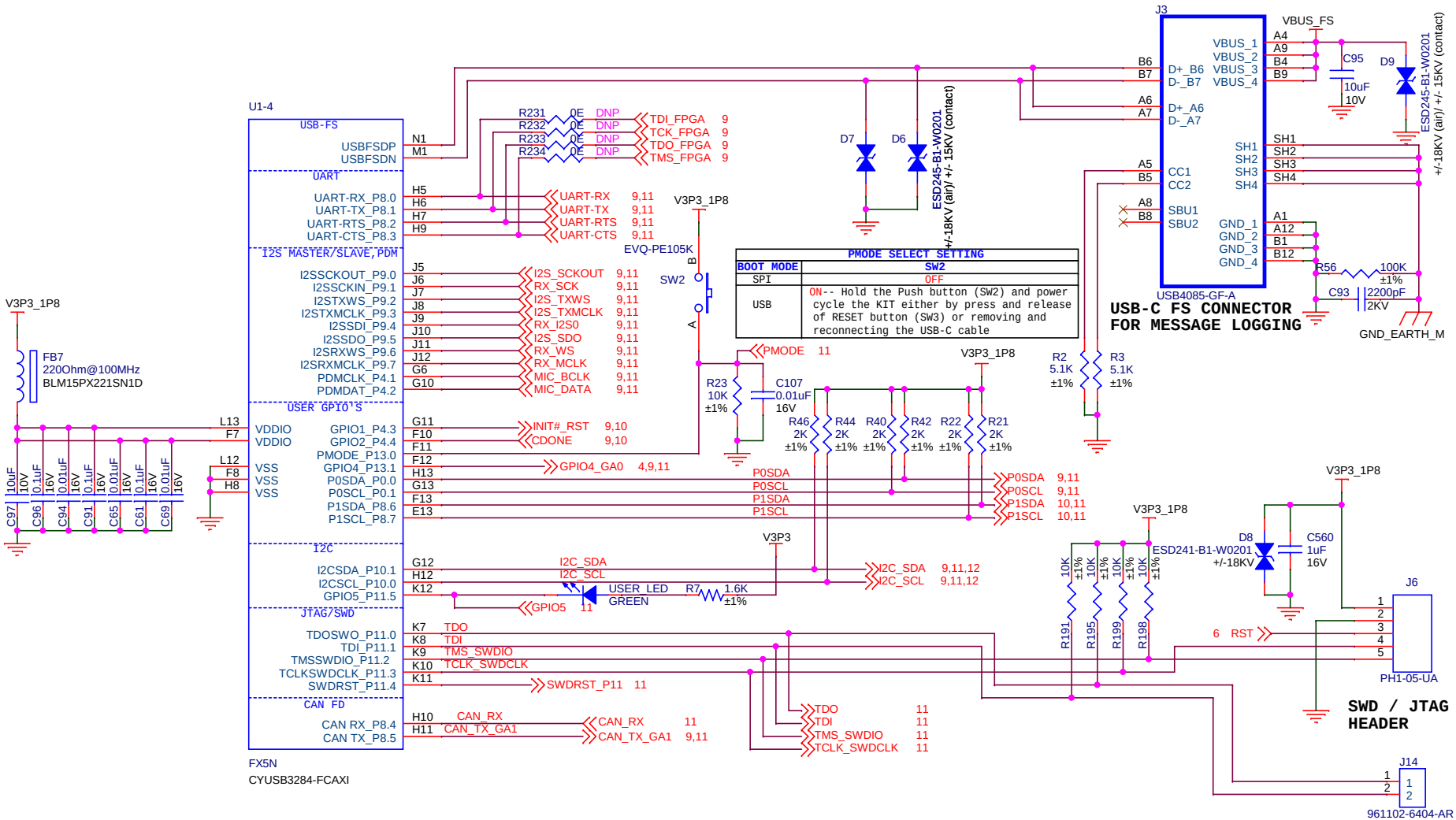

Legal Disclaimer :

The information given in this document shall in no event be regarded as a guarantee of conditions or characteristics. With respect to any examples or hints given herein, any typical values stated herein and/or any information regarding the application of the device, Infineon Technologies hereby disclaims any and all warranties and liabilities of any kind, including without limitation, warranties of non-infringement of intellectual property rights of any third party.

SCH Title : BASE BOARD				
Page Title: GPIO				
Size	Document Number	Drawn By	Approved By	Rev
A4	630-60767-01	MISHRASANATK	RAJA	01
Date: Thursday, February 13, 2025		Sheet 8 of 15		

FMC HPC MEZZANINE CONNECTOR (BOTTOM SIDE)

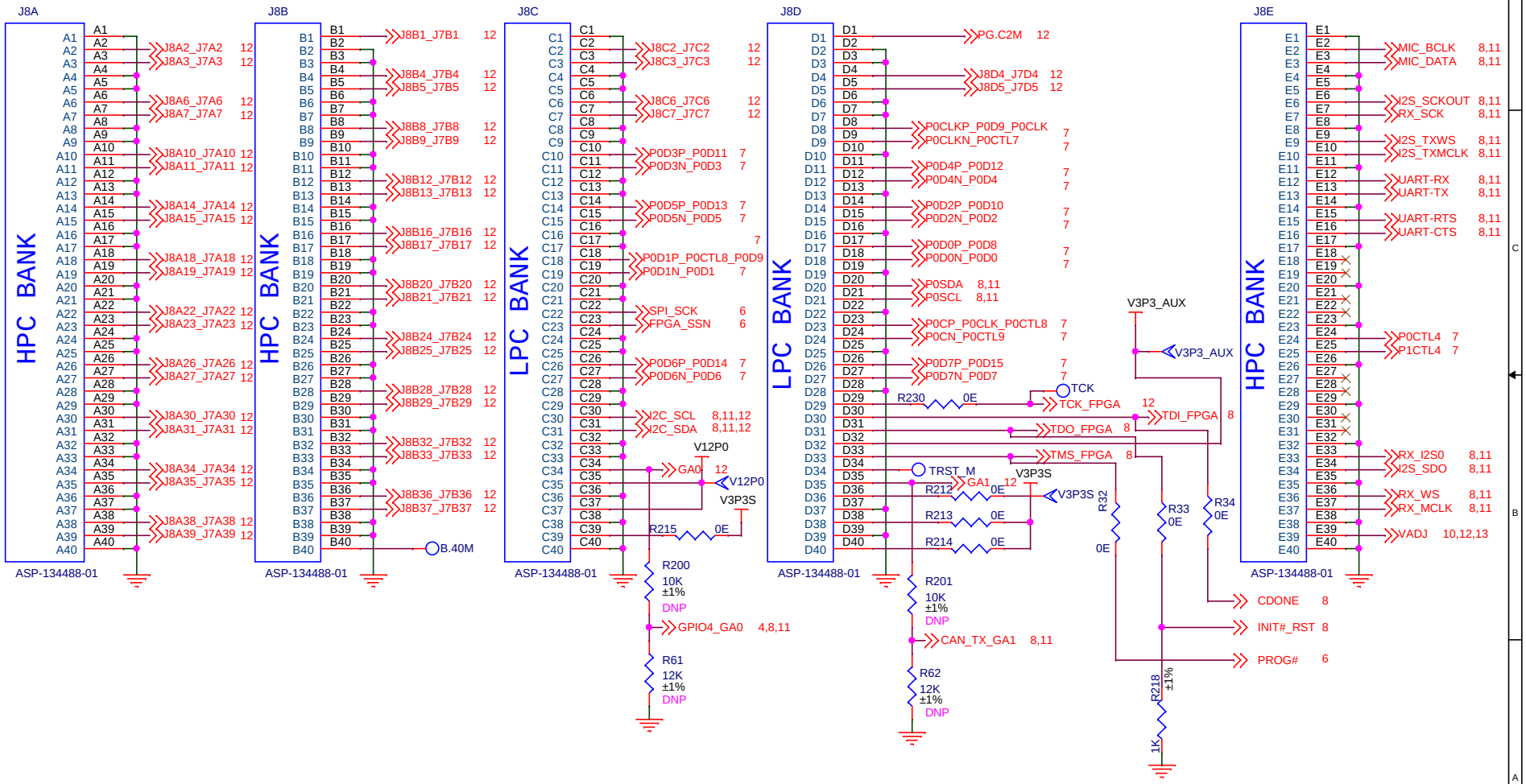

Legal Disclaimer :

The information given in this document shall in no event be regarded as a guarantee of conditions or characteristics. With respect to any examples or hints given herein, any typical values stated herein and/or any information regarding the application of the device, Infineon Technologies hereby disclaims any and all warranties and liabilities of any kind, including without limitation, warranties of non-infringement of intellectual property rights of any third party.

SCH Title : BASE BOARD				
Page Title: FMC HPC MEZZANINE - 1				
Size	Document Number	Drawn By	Approved By	Rev
A4	630-60767-01	MISHRASANATK	RAJA	01
Date: Thursday, February 13, 2025		Sheet 9 of 15		

FMC HPC MEZZANINE CONNECTOR (BOTTOM SIDE)

R63 TO BE REMOVED WHEN ADD ON CARDS USED WITH J7

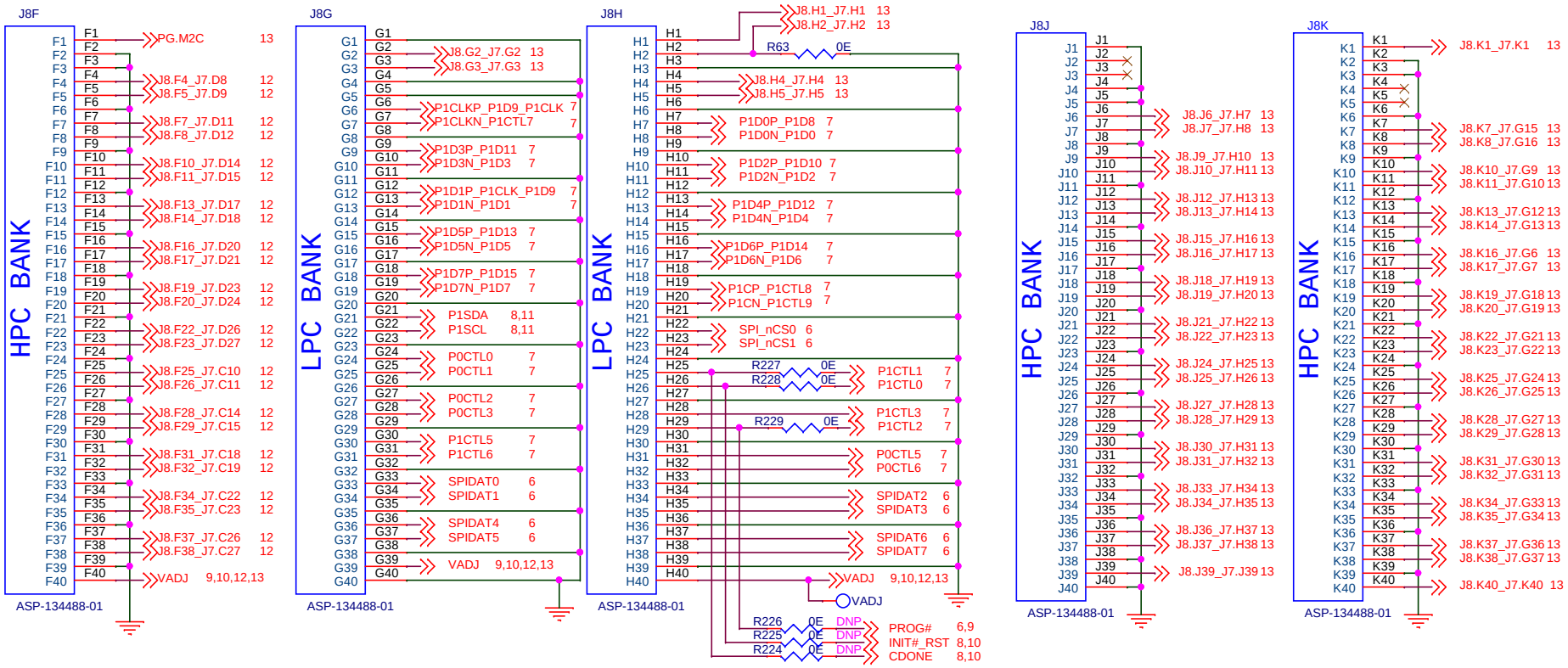

Legal Disclaimer :

The information given in this document shall in no event be regarded as a guarantee of conditions or characteristics. With respect to any examples or hints given herein, any typical values stated herein and/or any information regarding the application of the device, Infineon Technologies hereby disclaims any and all warranties and liabilities of any kind, including without limitation, warranties of non-infringement of intellectual property rights of any third party.

SCH Title : BASE BOARD				
Page Title: FMC HPC MEZZANINE - 2				
Size	Document Number	Drawn By	Approved By	Rev
A4	630-60767-01	MISHRASANATK	RAJA	01
Date: Thursday, February 13, 2025		Sheet 10 of 15		

GPIO ACCESSORY BOARD INTERFACE

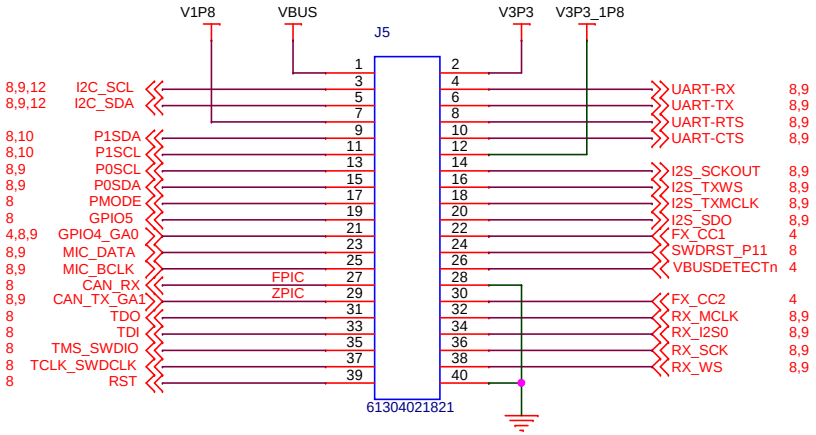

Legal Disclaimer :

The information given in this document shall in no event be regarded as a guarantee of conditions or characteristics. With respect to any examples or hints given herein, any typical values stated herein and/or any information regarding the application of the device, Infineon Technologies hereby disclaims any and all warranties and liabilities of any kind, including without limitation, warranties of non-infringement of intellectual property rights of any third party.

SCH Title :	**BASE BOARD**			
Page Title:	**GPIO INTERFACE**			
Size	Document Number	Drawn By	Approved By	Rev
A4	**630-60767-01**	**MISHRASANATK**	**RAJA**	**01**
Date:	Thursday, February 13, 2025	Sheet	**11** of **15**	

FMC HPC CARRIER (TOP)

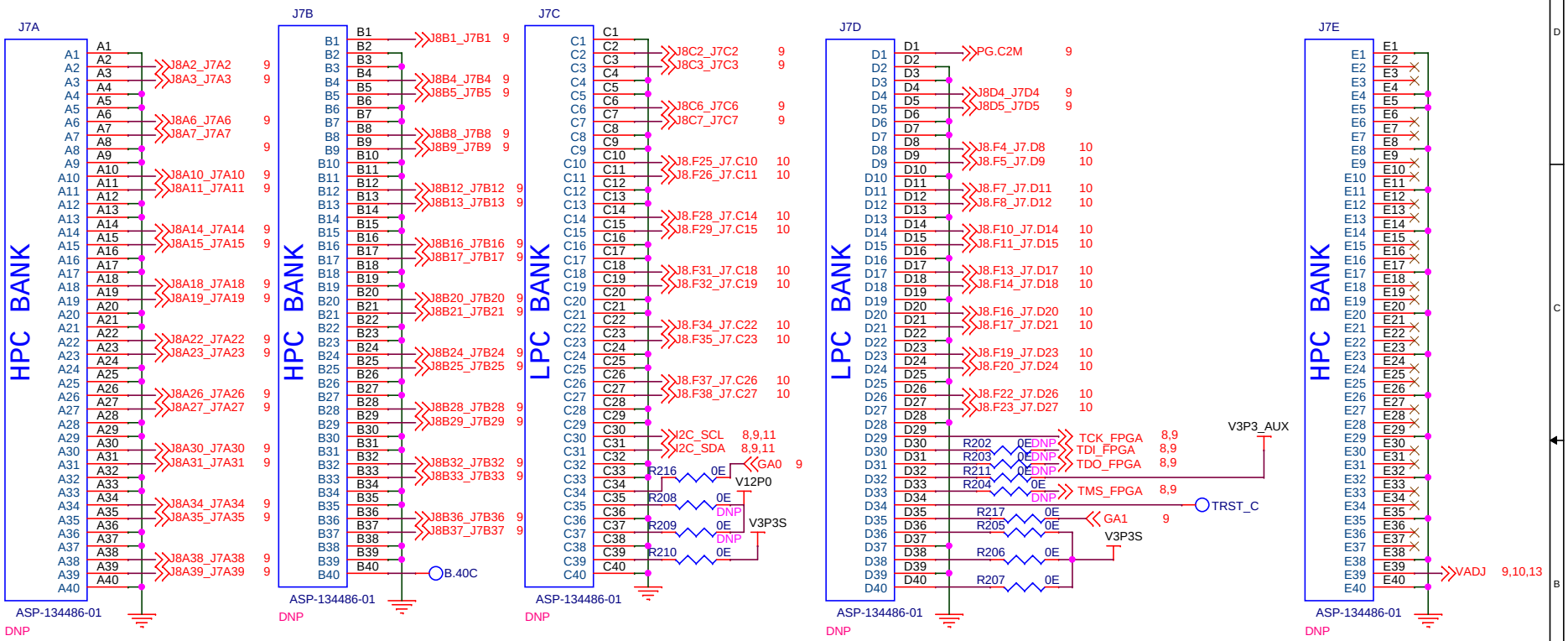

Legal Disclaimer :

The information given in this document shall in no event be regarded as a guarantee of conditions or characteristics. With respect to any examples or hints given herein, any typical values stated herein and/or any information regarding the application of the device, Infineon Technologies hereby disclaims any and all warranties and liabilities of any kind, including without limitation, warranties of non-infringement of intellectual property rights of any third party.

SCH Title : BASE BOARD				
Page Title: FMC HPC CARRIER - 1				
Size	Document Number	Drawn By	Approved By	Rev
A4	630-60767-01	MISHRASANATK	RAJA	01
Date: Thursday, February 13, 2025		Sheet 12 of 15		

FMC HPC CARRIER (TOP)

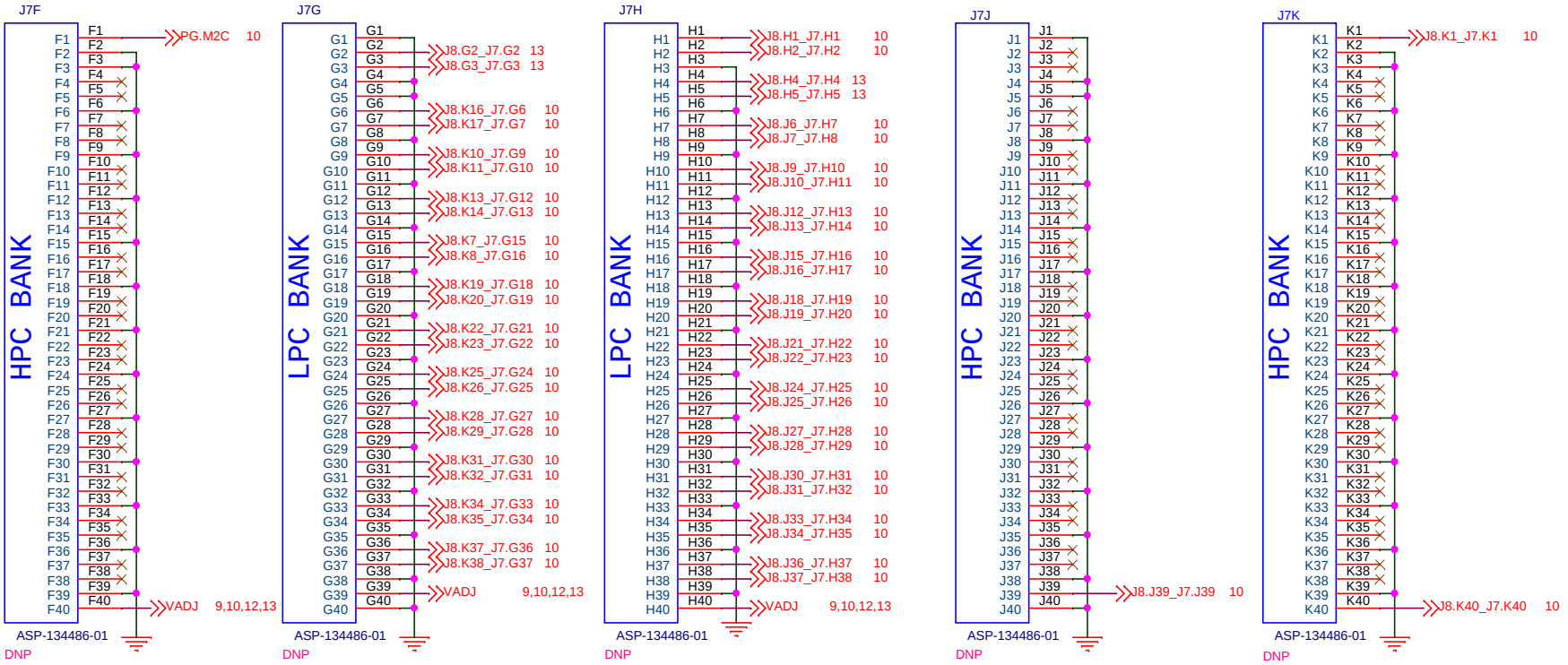

Legal Disclaimer :

The information given in this document shall in no event be regarded as a guarantee of conditions or characteristics. With respect to any examples or hints given herein, any typical values stated herein and/or any information regarding the application of the device, Infineon Technologies hereby disclaims any and all warranties and liabilities of any kind, including without limitation, warranties of non-infringement of intellectual property rights of any third party.

SCH Title :	**BASE BOARD**			
Page Title:	**FMC HPC CARRIER - 2**			
Size	Document Number	Drawn By	Approved By	Rev
A4	**630-60767-01**	**MISHRASANATK**	**RAJA**	**01**
Date:	Thursday, February 13, 2025	Sheet	**13** of **15**	

ACCESSORIES

SUPERSPEED USB-C CABLE

DX07518S10N18747

ACC2

PCBA LABEL

LBL PCA Label

ACC4

LBL Kit

ACC5

MOUNTING HOLES

MH3

MH4

Legal Disclaimer :

The information given in this document shall in no event be regarded as a guarantee of conditions or characteristics. With respect to any examples or hints given herein, any typical values stated herein and/or any information regarding the application of the device, Infineon Technologies hereby disclaims any and all warranties and liabilities of any kind, including without limitation, warranties of non-infringement of intellectual property rights of any third party.

SCH Title : BASE BOARD				
Page Title: ACCESSORIES				
Size	Document Number	Drawn By	Approved By	Rev
A4	630-60767-01	MISHRASANATK	RAJA	01
Date: Thursday, February 13, 2025		Sheet 14 of 15		

REVISION HISTORY

REV	DESCRIPTION OF CHANGE	DATE
01	Initial Release	05/FEB/2025

Legal Disclaimer :
The information given in this document shall in no event be regarded as a guarantee of conditions or characteristics. With respect to any examples or hints given herein, any typical values stated herein and/or any information regarding the application of the device, Infineon Technologies hereby disclaims any and all warranties and liabilities of any kind, including without limitation, warranties of non-infringement of intellectual property rights of any third party.

SCH Title : BASE BOARD				
Page Title: REVISION HISTORY				
Size	Document Number	Drawn By	Approved By	Rev
A4	630-60767-01	MISHRASANATK	RAJA	01
Date: Thursday, February 13, 2025		Sheet 15 of 15		