Revision History

Rev.	Date	Modified by	Remark
v10	2015.3.20	KL	first version

Jumper Description

Jumper	Function	Setting
J1	MD0 configurartion of MB9AF312K	Open : User mode Close : Flash programming mode
J2	MD0 configurartion of S6E1C3	Open : User mode Close : Flash programming mode
J3	Multifunction	1-2 : Flash programming via UART0 2-3 : USB VBUS detection/Flash programmng via USB
J4	Multifunction	1-2 : Power from CN3 2-3 : Power from CN4

CMSIS-DAP & USB
SK-FM0-64L-S6E1C32-02-DEBUG.SchDoc

MCU
SK-FM0-64L-S6E1C32-01-MCU.SchDoc

Codec
SK-FM0-64L-S6E1C32-03-CODEC.SchDoc

Arduino & Multicon interface
SK-FM0-64L-S6E1C32-04-INTERFACE.SchDoc

Cypress

Drawn by : KL

Cannot open file E:\04_SoftwareTool\Altium Designer Winter 09\Altium Designer Winter 09\Examples\PCB Logo

Title FM0-64L-S6E1C3

Size A3 | Document Number Diagram | Rev v10

Date: | Sheet 1 of 5

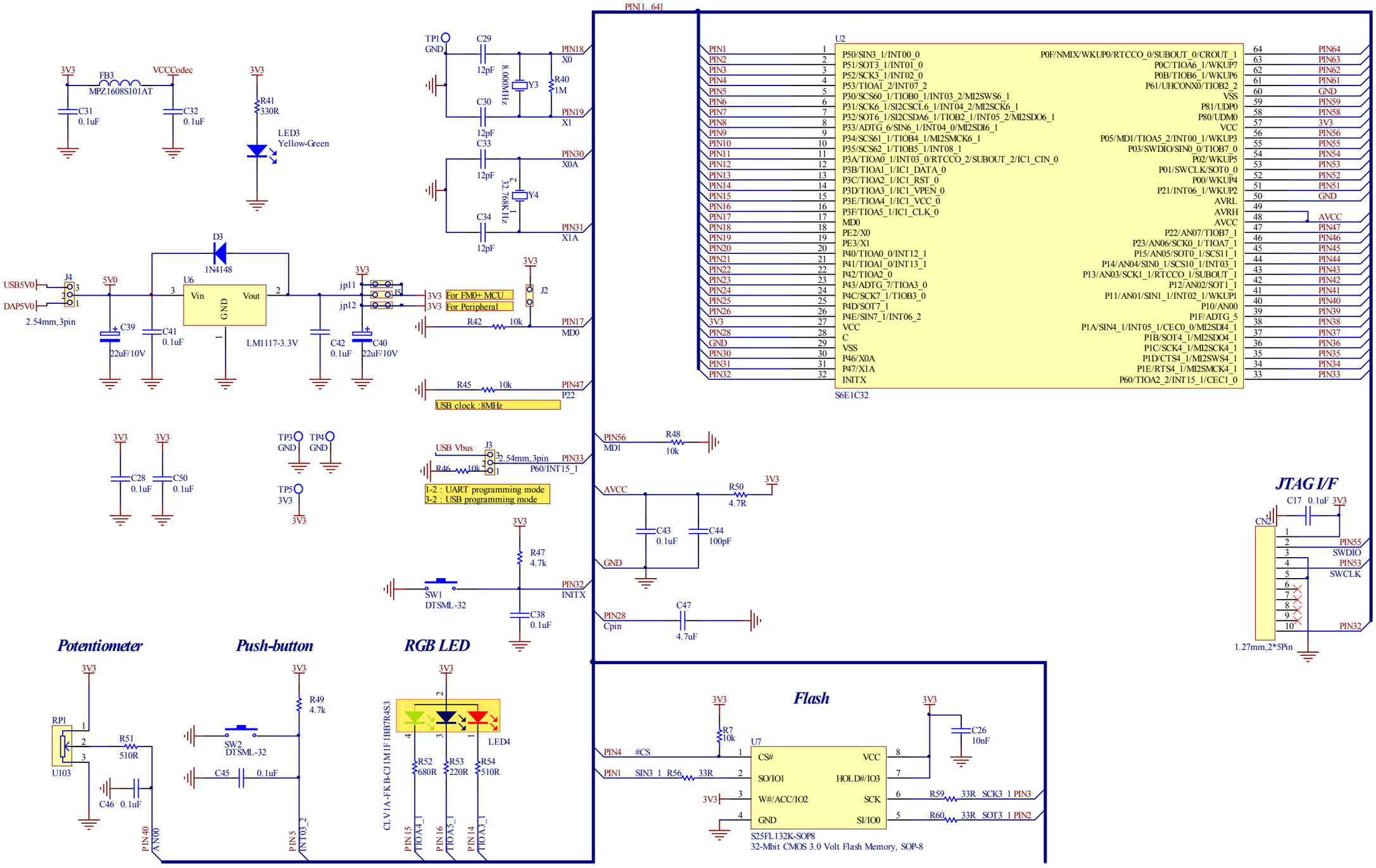

Cypress	Cannot open file E:\04_SoftwareTool\Altium Designer Winter 09\Altium Designer Winter 09\Examples\PCB Logo
Drawn by : KL	
Title	FM0-64L-S6E1C3
Size A3	MCU
Rev	v10
Date:	Sheet 2 of 5

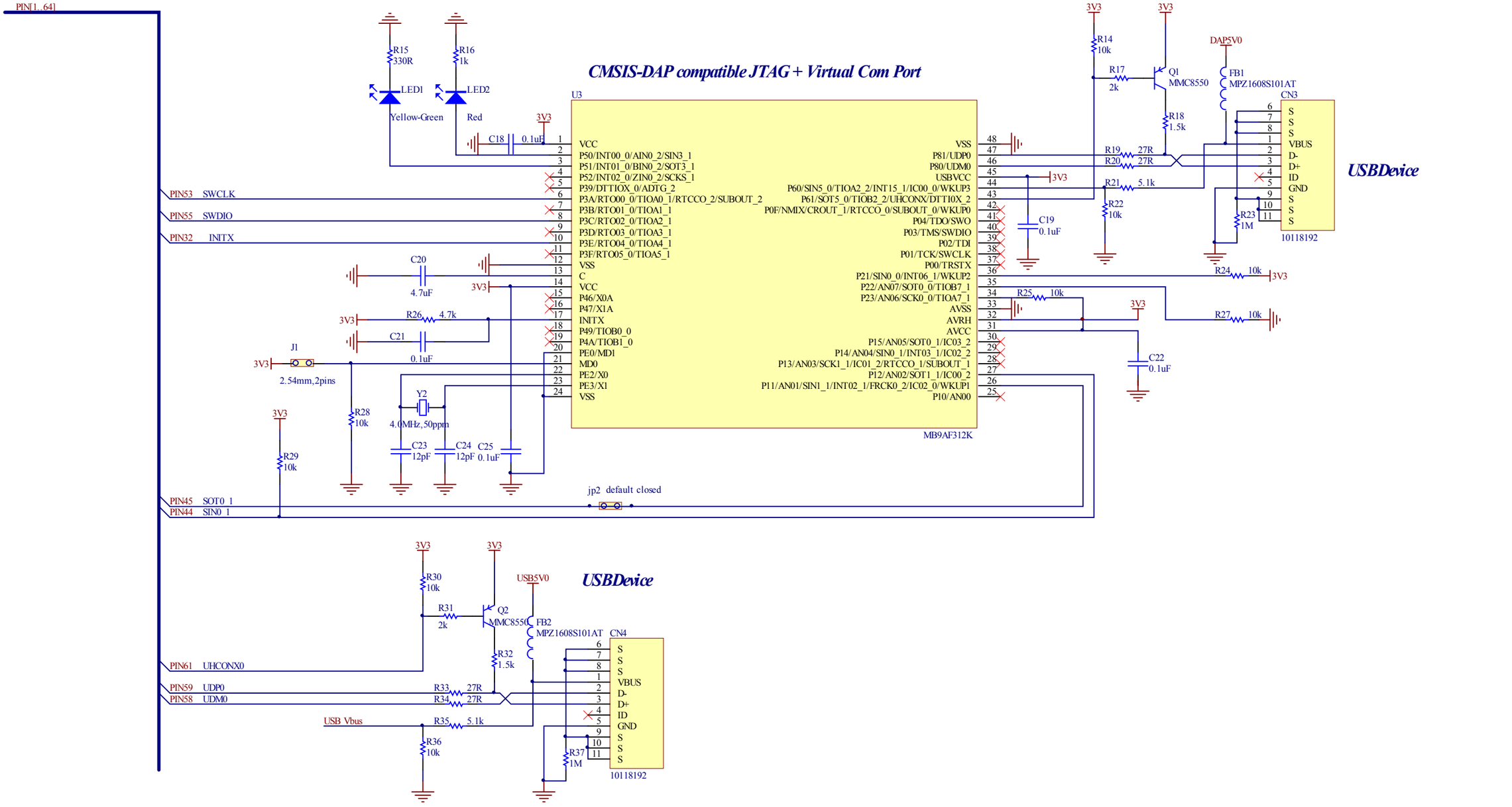

Cypress Drawn by : KL		Cannot open file E:\04_SoftwareTool\Altium Designer Winter 09\Altium Designer Winter 09\Examples\PCB Logo
Title	FM0-64L-S6E1C3	
Size A3	Document Number CMSIS-DAP & USB	Rev v10
Date:		Sheet 3 of 5

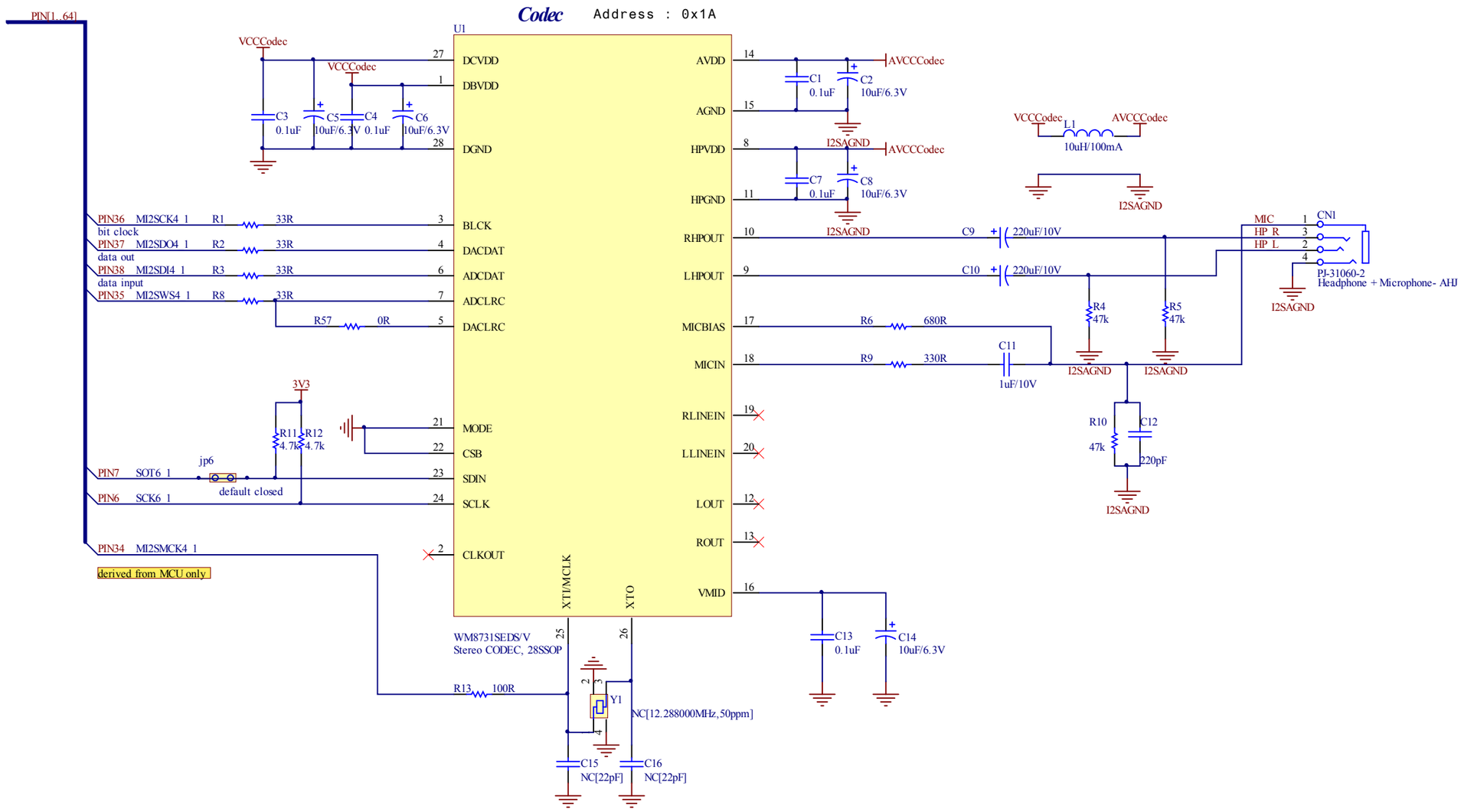

Cypress Drawn by : KL	Cannot open file E:\04_SoftwareTool\Altium Designer Winter 09\Altium Designer Winter 09\Examples\PCB Logo	
Title	FM0-64L-S6E1C3	
Size A3	Document Number Codec	Rev v10
Date:		Sheet 4 of 5

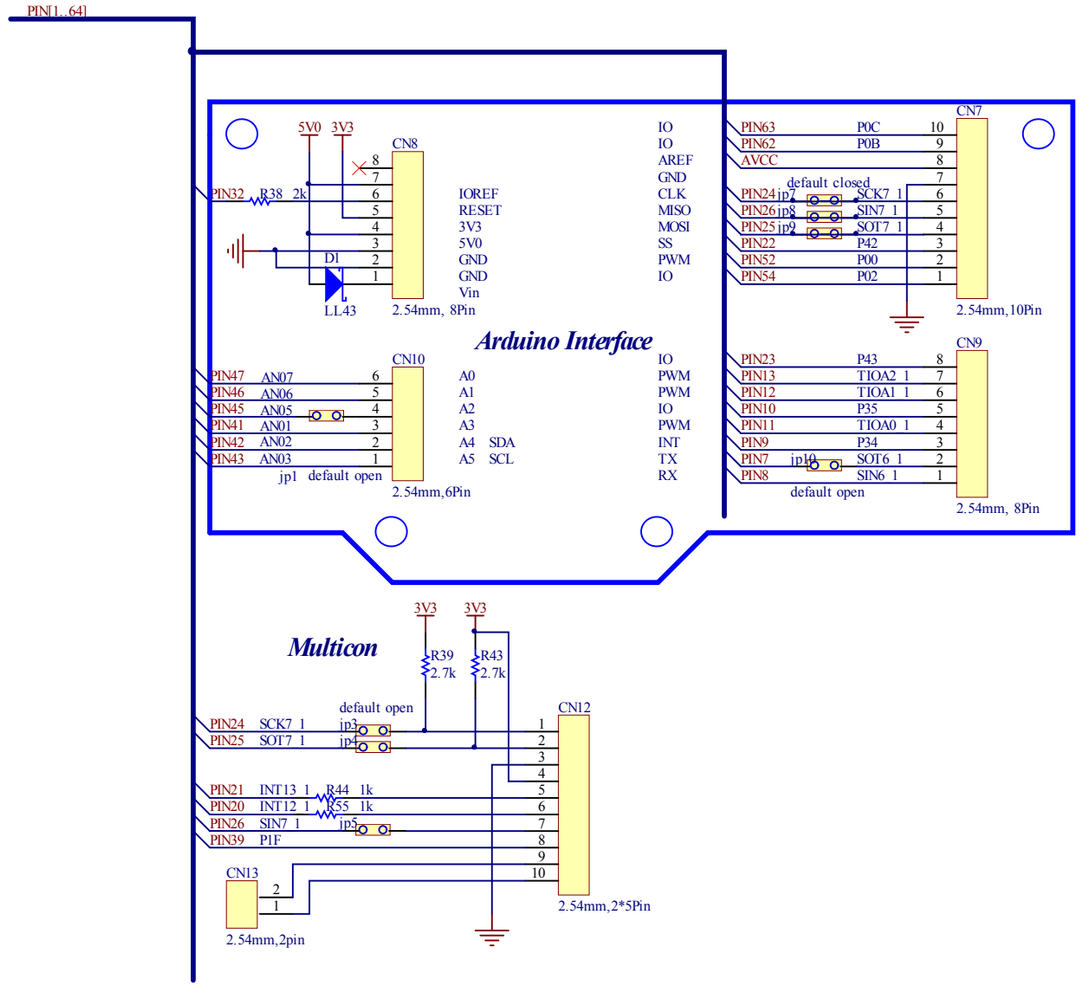

Cypress Drawn by : KL		Cannot open file E:\04_SoftwareTool\Altium Designer Winter 09\Altium Designer Winter 09\Examples\PCB Logo
Title	FM0-64L-S6E1C3	
Size A3	Document Number Arduino & Multicon interface	Rev v10
Date:		Sheet 5 of 5