REVISION HISTORY

Rev	DESCRIPTION	DATE
03	Beta Release	10/03/2017
04	Production Release	03/27/2018
	Added R312-10K pullup Added R311-0E and made as DNL.	

EZ-PD CCG4 DOCK REFERENCE DESIGN

CONTENTS

PAGE	DESCRIPTION
01	TITLE, TABLE OF CONTENTS
02	BLOCK DIAGRAM
03	DP SPLITTER STDP4320
04	DP to HDMI LEVEL TRANSLATOR
05	TYPE-C US MUX
06	CCG4 CONNECTIONS
07	USB 3.0 HUB1 (CYUSB3314)
08	USB 3.0 HUB2 (CYUSB3314)
09	DMC CONTROLLER
10	TYPE-C DS MUX
11	ETHERNET GX3 CONTROLLER
12	POWER
13	DEBUG
14	USB 2.0 HUB
15	US PROVIDER PATH
16	DS PROVIDER PATH

CYPRESS SEMICONDUCTOR
198 CHAMPION COURT
SAN JOSE, CA 95134
(408) 943-2600

CYPRESS SEMICONDUCTOR © 2018

SCH Title : EZ-PD CCG4 DOCK REFERENCE DESIGN

Page Title : TITLE, TABLE OF CONTENTS

Size	Document Number	Drawn By	Approved By	Rev
		PRVE	PRVE	04

Date: Tuesday, March 27, 2018 Sheet 1 of 16

EZ-PD CCG4 DOCK REFERENCE DESIGN

BLOCK DIAGRAM

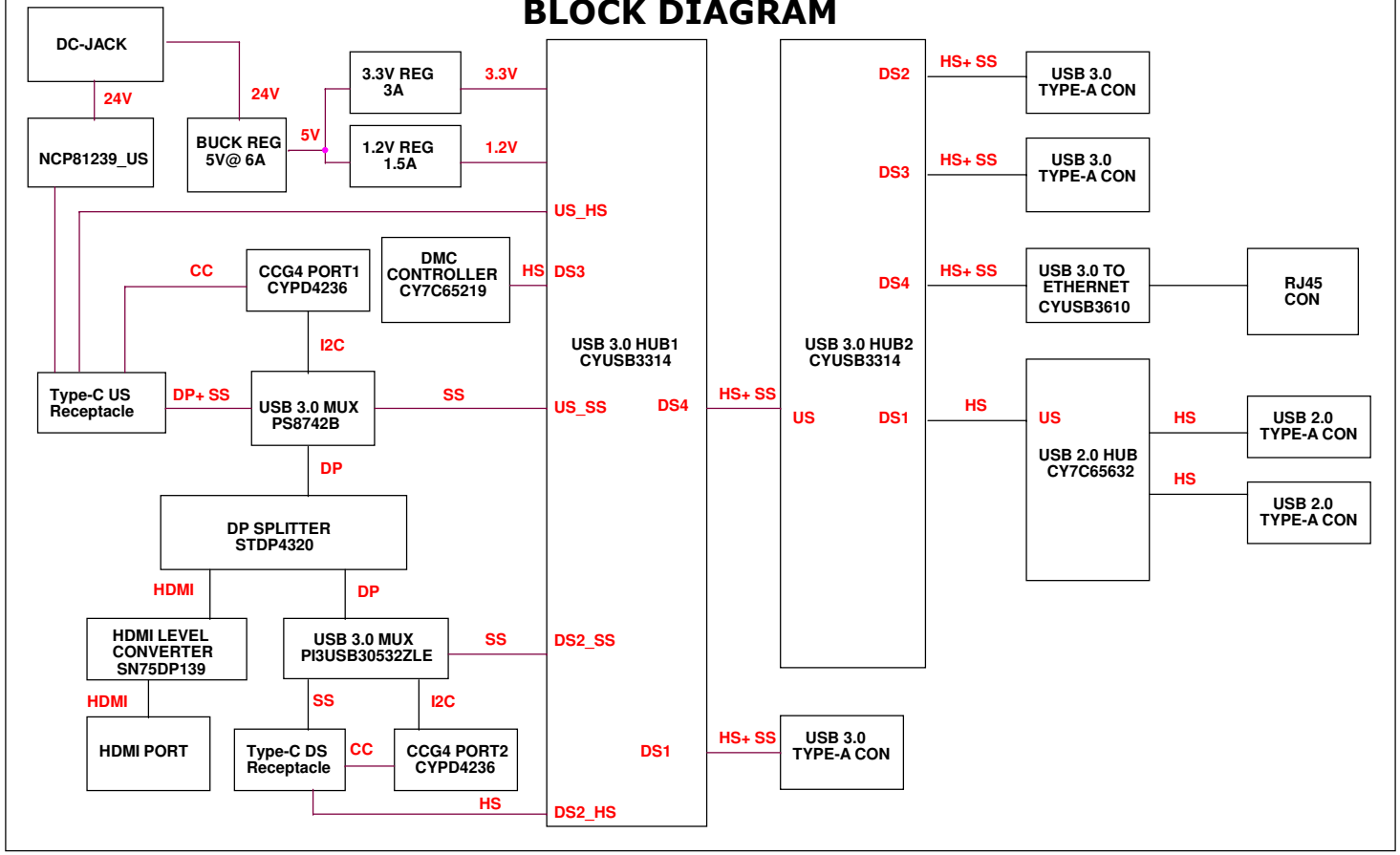

FW UPGRADE for HUBs & CCG4

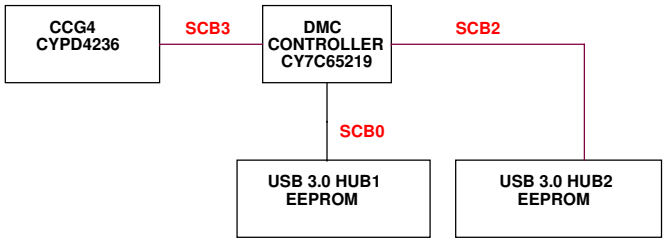

I2C MASTER CONTROL

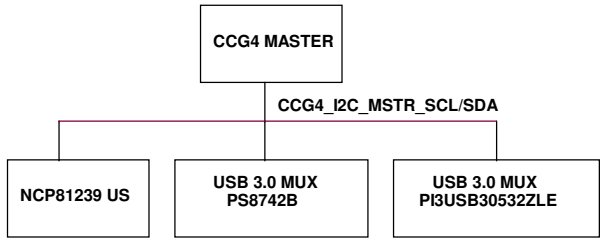

CYPRESS SEMICONDUCTOR
198 CHAMPION COURT
SAN JOSE, CA 95134
(408) 943-2600

CYPRESS SEMICONDUCTOR © 2018

SCH Title : EZ-PD CCG4 DOCK REFERENCE DESIGN				
Page Title : BLOCK DIAGRAM				
Size	Document Number	Drawn By	Approved By	Rev
		PRVE	PRVE	04
Date: Tuesday, March 27, 2018		Sheet 2 of 16		

DP Splitter STDP4320

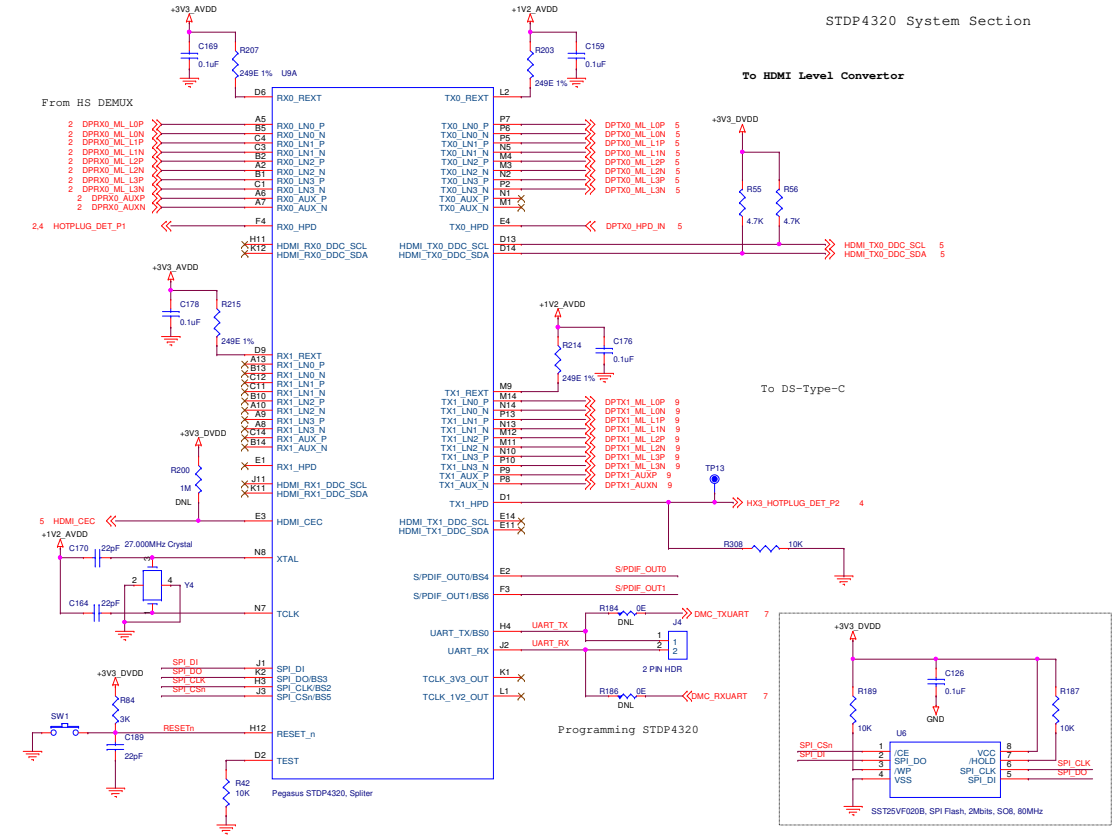

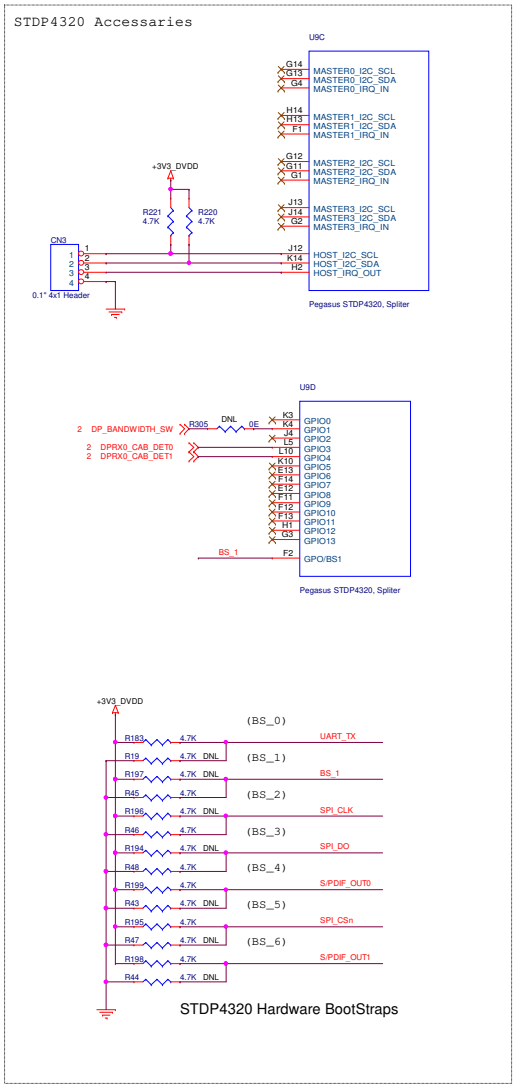

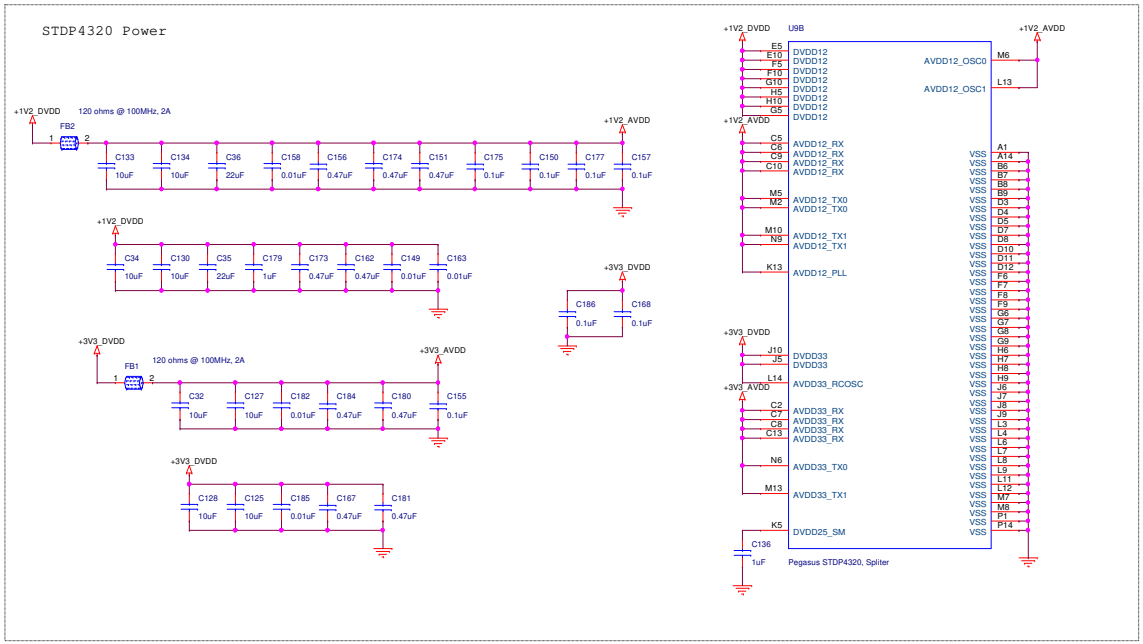

CYPRESS SEMICONDUCTOR
198 CHAMPION COURT
SAN JOSE, CA 95134
(408) 943-2600

CYPRESS SEMICONDUCTOR © 2018

SCH Title : EZ-PD CCG4 DOCK REFERENCE DESIGN

Page Title : DP SPLITTER STDP4320

Size	Document Number	Drawn By	Approved By	Rev
		PRVE	PRVE	04

Date: Tuesday, March 27, 2018 Sheet 3 of 16

DP to HDMI LEVEL TRANSLATOR

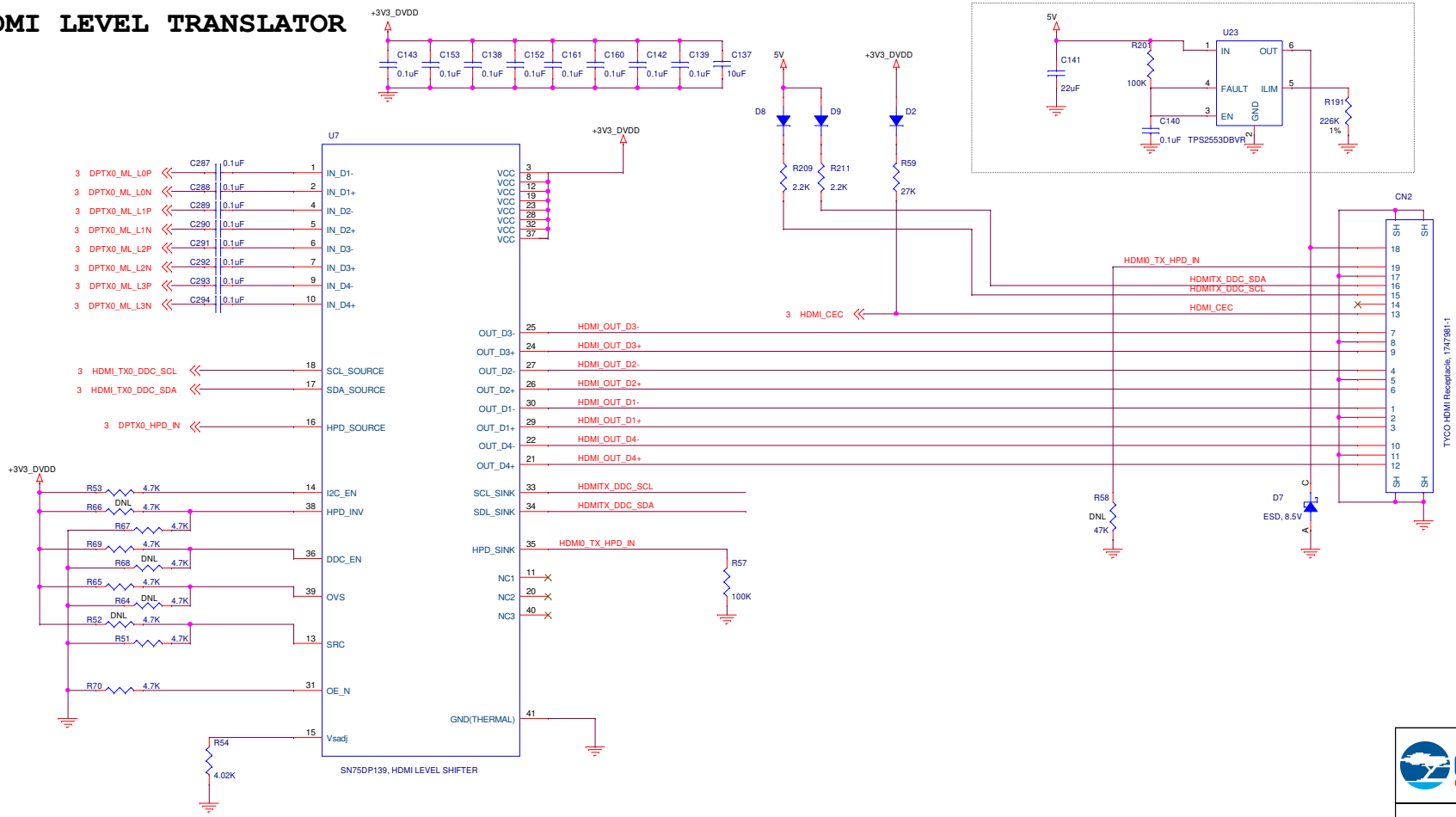

CYPRESS SEMICONDUCTOR
198 CHAMPION COURT
SAN JOSE, CA 95134
(408) 943-2600

CYPRESS SEMICONDUCTOR © 2018

SCH Title : EZ-PD CCG4 DOCK REFERENCE DESIGN

Page Title : DP to HDMI LEVEL TRANSLATOR

Size	Document Number	Drawn By	Approved By	Rev
		PRVE	PRVE	04

Date: Tuesday, March 27, 2018 Sheet 4 of 16

Type-C UpStream/HS DEMUX PS8742B

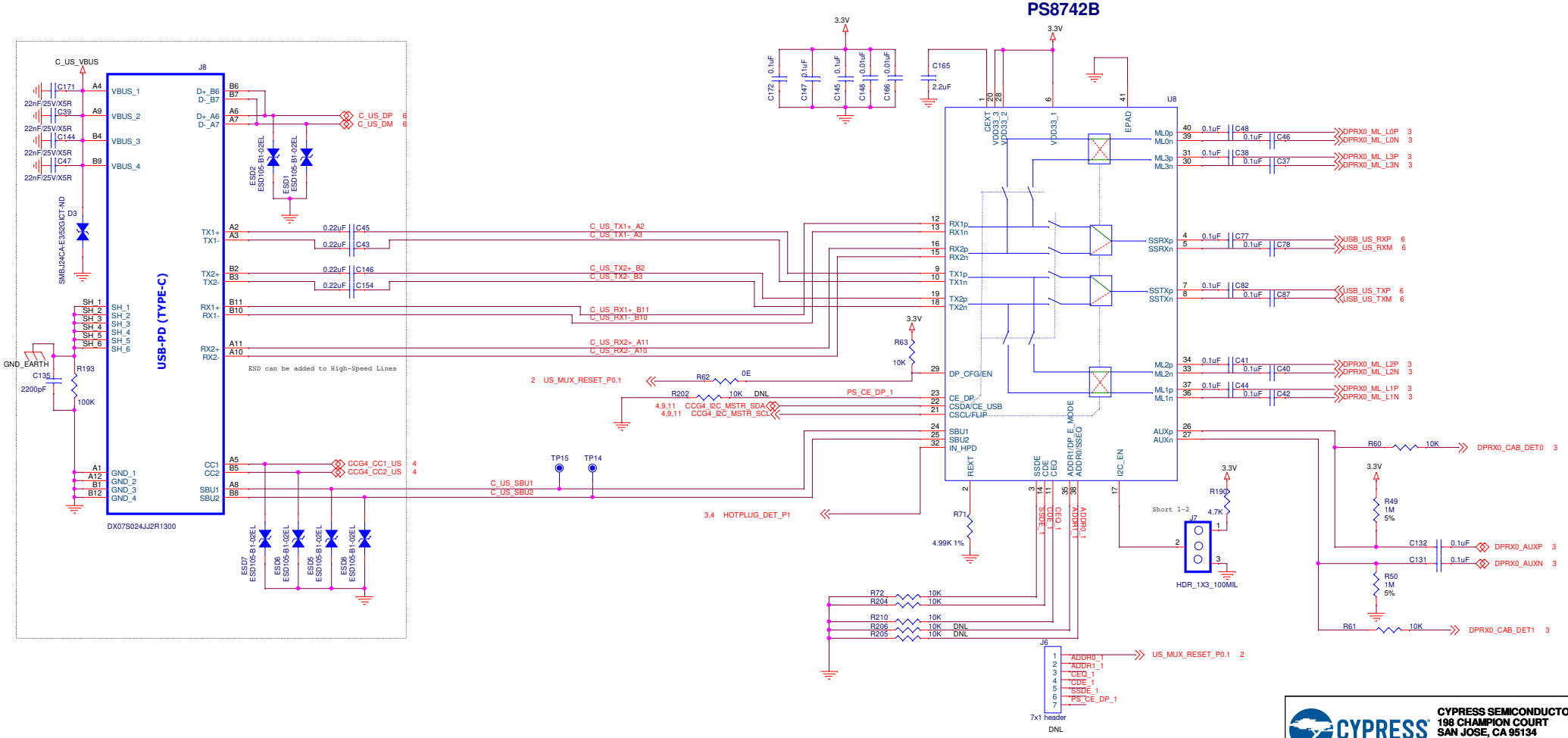

CYPRESS SEMICONDUCTOR
198 CHAMPION COURT
SAN JOSE, CA 95134
(408) 943-2600

CYPRESS SEMICONDUCTOR © 2018

SCH Title : EZ-PD CCG4 DOCK REFERENCE DESIGN

Page Title : TYPE-C US MUX

Size	Document Number	Drawn By	Approved By	Rev
		PRVE	PRVE	04

Date: Tuesday, March 27, 2018 Sheet 5 of 16

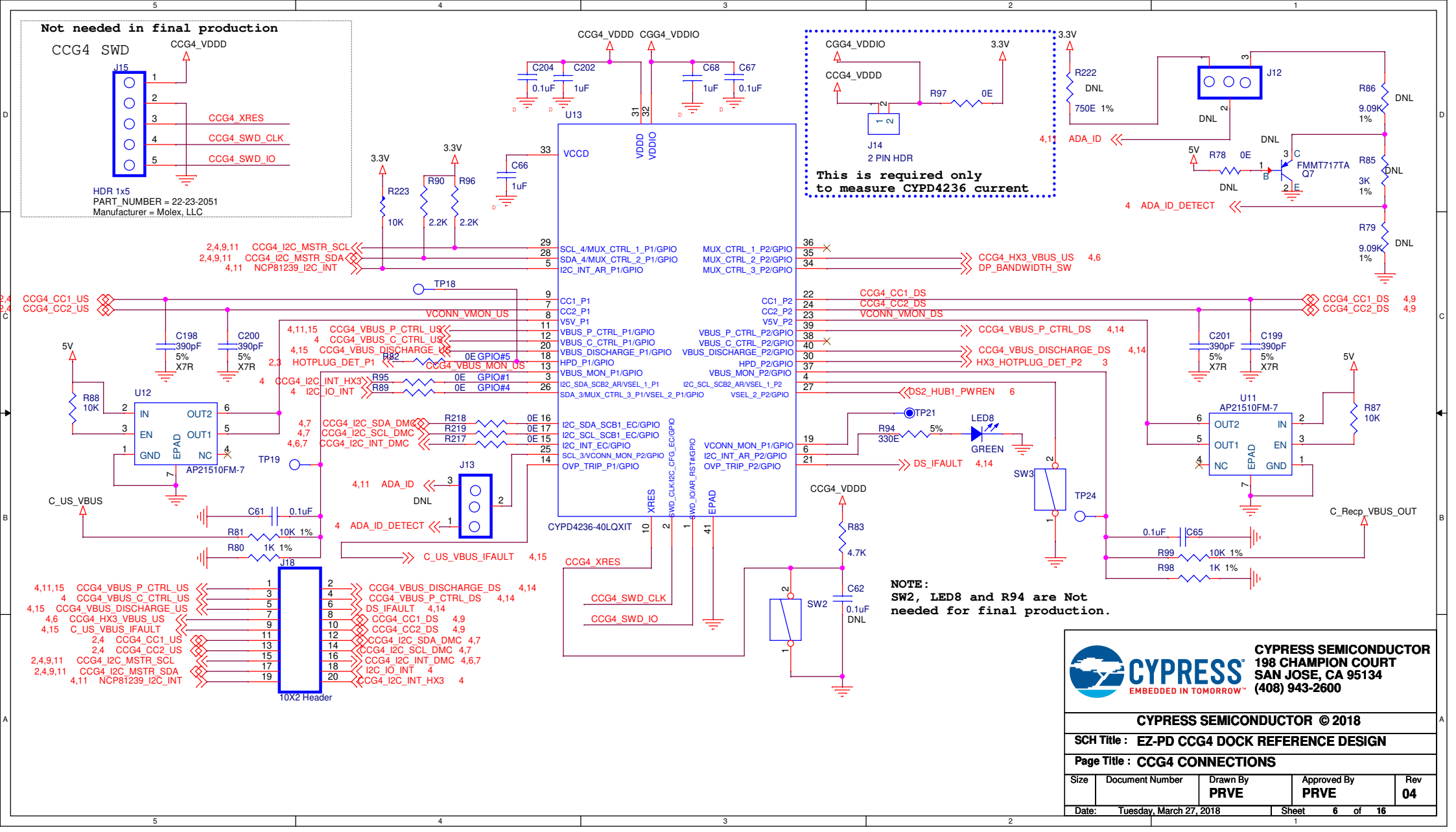
Not needed in final production
CCG4 SWD
CCG4_VDDD
J15
CCG4_XRES
CCG4_SWD_CLK
CCG4_SWD_IO
HDR 1x5
PART_NUMBER = 22-23-2051
Manufacturer = Molex, LLC
CCG4_VDDD CGG4_VDDIO
C204 0.1uF
C202 1uF
C68 1uF
C67 0.1uF
U13
VCCD
VDDD
VDDIO
C66 1uF
3.3V
R223 10K
R90 2.2K
R96 2.2K
CGG4_VDDIO
CCG4_VDDD
R97 0E
J14
2 PIN HDR
This is required only
to measure CYPD4236 current
R222 DNL
750E 1%
J12
R86 DNL
9.09K 1%
R85 3K 1%
R79 9.09K 1%
ADA_ID
ADA_ID_DETECT
R78 0E
FMMT717TA
Q7
SCL_4/MUX_CTRL_1_P1/GPIO
SDA_4/MUX_CTRL_2_P1/GPIO
I2C_INT_AR_P1/GPIO
MUX_CTRL_1_P2/GPIO
MUX_CTRL_2_P2/GPIO
MUX_CTRL_3_P2/GPIO
CCG4_I2C_MSTR_SCL
CCG4_I2C_MSTR_SDA
NCP81239_I2C_INT
CCG4_HX3_VBUS_US
DP_BANDWIDTH_SW
TP18
CC1_P1
CC2_P1
V5V_P1
CC1_P2
CC2_P2
V5V_P2
VCONN_VMON_US
VCONN_VMON_DS
CCG4_CC1_US
CCG4_CC2_US
CCG4_CC1_DS
CCG4_CC2_DS
VBUS_P_CTRL_P1/GPIO
VBUS_C_CTRL_P1/GPIO
VBUS_DISCHARGE_P1/GPIO
HPD_P1/GPIO
VBUS_MON_P1/GPIO
VBUS_P_CTRL_P2/GPIO
VBUS_C_CTRL_P2/GPIO
VBUS_DISCHARGE_P2/GPIO
HPD_P2/GPIO
VBUS_MON_P2/GPIO
CCG4_VBUS_P_CTRL_US
CCG4_VBUS_C_CTRL_US
CCG4_VBUS_DISCHARGE_US
CCG4_VBUS_MON_US
CCG4_VBUS_P_CTRL_DS
CCG4_VBUS_DISCHARGE_DS
HX3_HOTPLUG_DET_P2
HOTPLUG_DET_P1
R82 0E GPIO#5
R95 0E GPIO#1
R89 0E GPIO#4
I2C_IO_INT
CCG4_I2C_INT_HX3
I2C_SDA_SCB2_AR/VSEL_1_P1
SDA_3/MUX_CTRL_3_P1/VSEL_2_P1/GPIO
I2C_SCL_SCB2_AR/VSEL_1_P2
VSEL_2_P2/GPIO
DS2_HUB1_PWREN
C198 390pF 5% X7R
C200 390pF 5% X7R
C201 390pF 5% X7R
C199 390pF 5% X7R
5V
R88 10K
U12
IN
OUT2
EN
OUT1
GND
NC
EPAD
AP21510FM-7
U11
AP21510FM-7
R87 10K
TP19
TP21
R94 330E 5%
LED8
GREEN
DS_IFAULT
SW3
TP24
C_US_VBUS
C61 0.1uF
R81 10K 1%
R80 1K 1%
J13
DNL
C_US_VBUS_IFAULT
C_Recp_VBUS_OUT
C65 0.1uF
R99 10K 1%
R98 1K 1%
I2C_SDA_SCB1_EC/GPIO
I2C_SCL_SCB1_EC/GPIO
I2C_INT_EC/GPIO
SCL_3/VCONN_MON_P2/GPIO
OVP_TRIP_P1/GPIO
SWD_CLK/I2C_CFG_EC/GPIO
SWD_IO/AR_RST#/GPIO
VCONN_MON_P1/GPIO
I2C_INT_AR_P2/GPIO
OVP_TRIP_P2/GPIO
CCG4_I2C_SDA_DMC
CCG4_I2C_SCL_DMC
CCG4_I2C_INT_DMC
R218 0E
R219 0E
R217 0E
CYPD4236-40LQXIT
XRES
EPAD
CCG4_XRES
CCG4_SWD_CLK
CCG4_SWD_IO
R83 4.7K
C62 0.1uF DNL
SW2
J18
10X2 Header
NOTE:
SW2, LED8 and R94 are Not
needed for final production.
CYPRESS SEMICONDUCTOR
198 CHAMPION COURT
SAN JOSE, CA 95134
(408) 943-2600
CYPRESS SEMICONDUCTOR © 2018
SCH Title : EZ-PD CCG4 DOCK REFERENCE DESIGN
Page Title : CCG4 CONNECTIONS
Size
Document Number
Drawn By PRVE
Approved By PRVE
Rev 04
Date: Tuesday, March 27, 2018
Sheet 6 of 16

USB3.0 HUB1 (CYUSB3314)

DS1	DS2	DS3	DS4
USB3.0 Type-A DS1	Type-C Port	USB2.0 Bill board	Connected to US USB3.0 port of HUB2

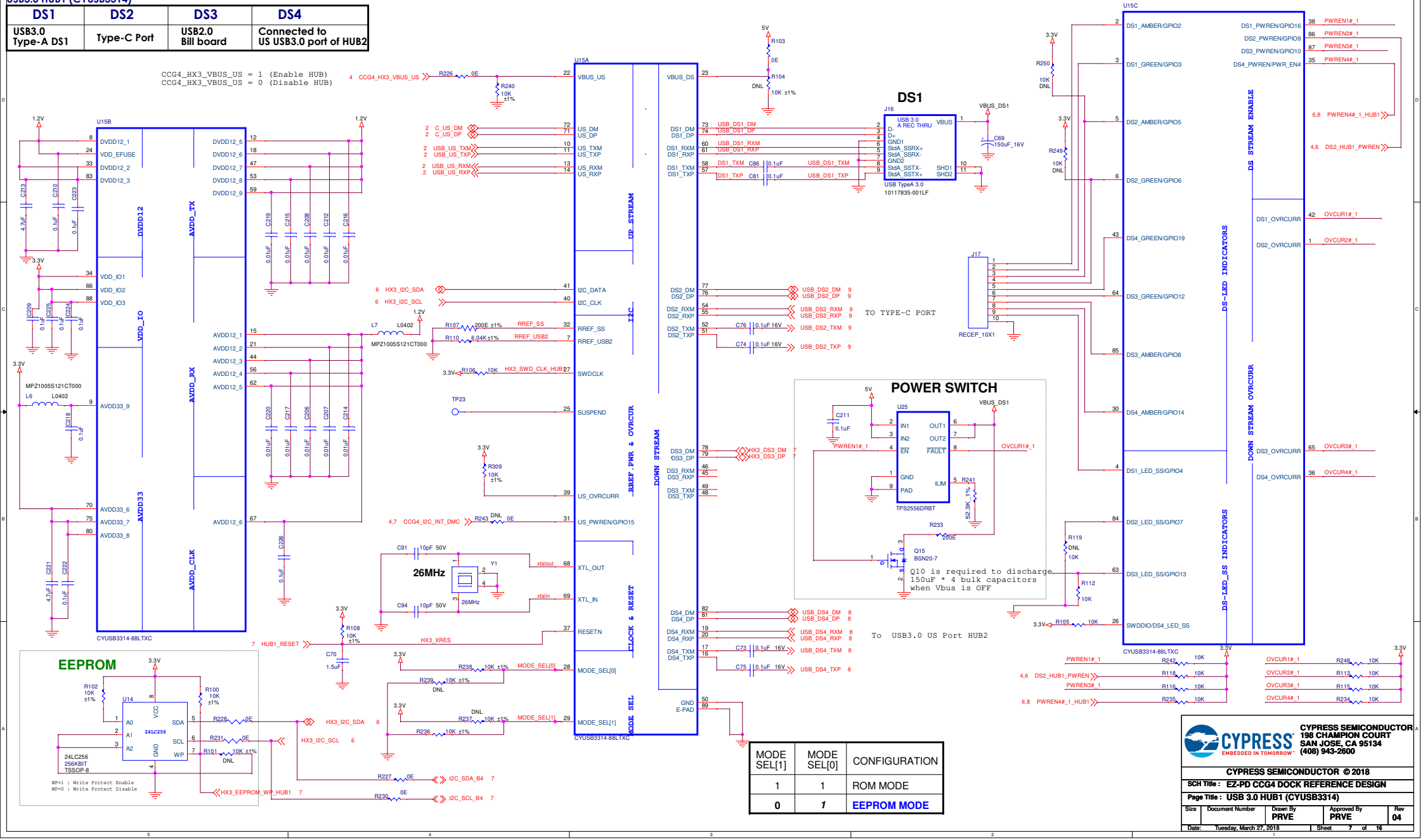

MODE SEL[1]	MODE SEL[0]	CONFIGURATION
1	1	ROM MODE
0	1	EEPROM MODE

CYPRESS SEMICONDUCTOR
198 CHAMPION COURT
SAN JOSE, CA 95134
(408) 943-2600

CYPRESS SEMICONDUCTOR © 2018

SCH Title : EZ-PD CCG4 DOCK REFERENCE DESIGN

Page Title : USB 3.0 HUB1 (CYUSB3314)

Size	Document Number	Drawn By	Approved By	Rev
		PRVE	PRVE	04

Date: Tuesday, March 27, 2018 Sheet 7 of 16

USB3.0 HUB2 (CYUSB3314)

DS1	DS2	DS3	DS4
USB2.0 HUB	USB3.0 Type-A DS	USB3.0 Type-A DS	Ethernet Port

OWREN4#_1_HUB1 = 1 (Disable USB)
OWREN4#_1_HUB1 = 0 (Enable USB)

MODE SEL[1]	MODE SEL[0]	CONFIGURATION
1	1	ROM MODE
0	***1***	***EEPROM MODE***

CYPRESS SEMICONDUCTOR
198 CHAMPION COURT
SAN JOSE, CA 95134
(408) 943-2600

CYPRESS SEMICONDUCTOR © 2018

SCH Title : EZ-PD CCG4 DOCK REFERENCE DESIGN

Page Title : USB 3.0 HUB2 (CYUSB3314)

Size	Document Number	Drawn By	Approved By	Rev
		PRVE	PRVE	04

Date: Tuesday, March 27, 2018 Sheet 8 of 16

DMC CONTROLLLER

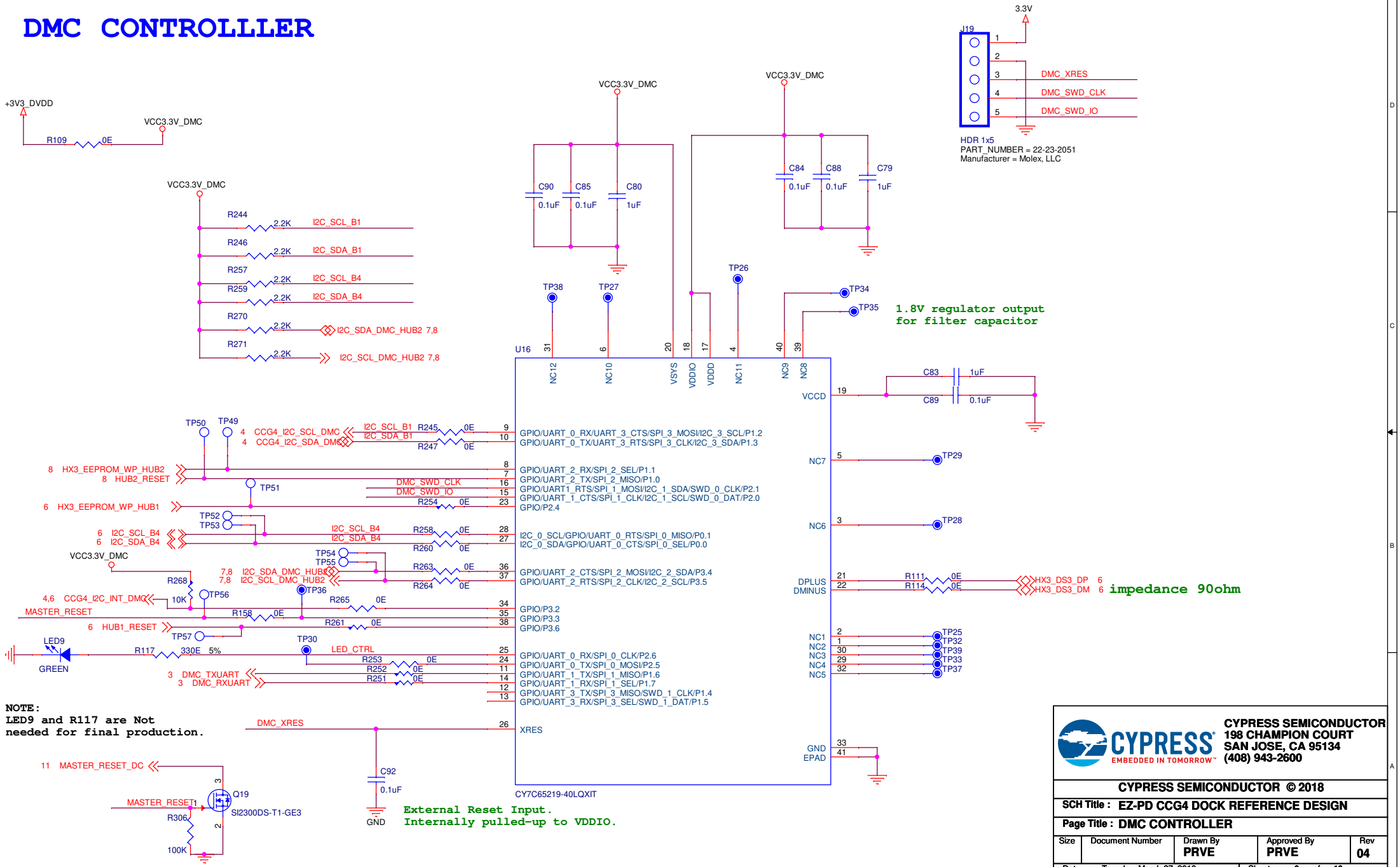

NOTE:
LED9 and R117 are Not needed for final production.

CYPRESS SEMICONDUCTOR
198 CHAMPION COURT
SAN JOSE, CA 95134
(408) 943-2600

CYPRESS SEMICONDUCTOR © 2018

SCH Title : EZ-PD CCG4 DOCK REFERENCE DESIGN				
Page Title : DMC CONTROLLER				
Size	Document Number	Drawn By	Approved By	Rev
		PRVE	PRVE	04
Date: Tuesday, March 27, 2018		Sheet 9 of 16		

Type-C DownStream/HS MUX

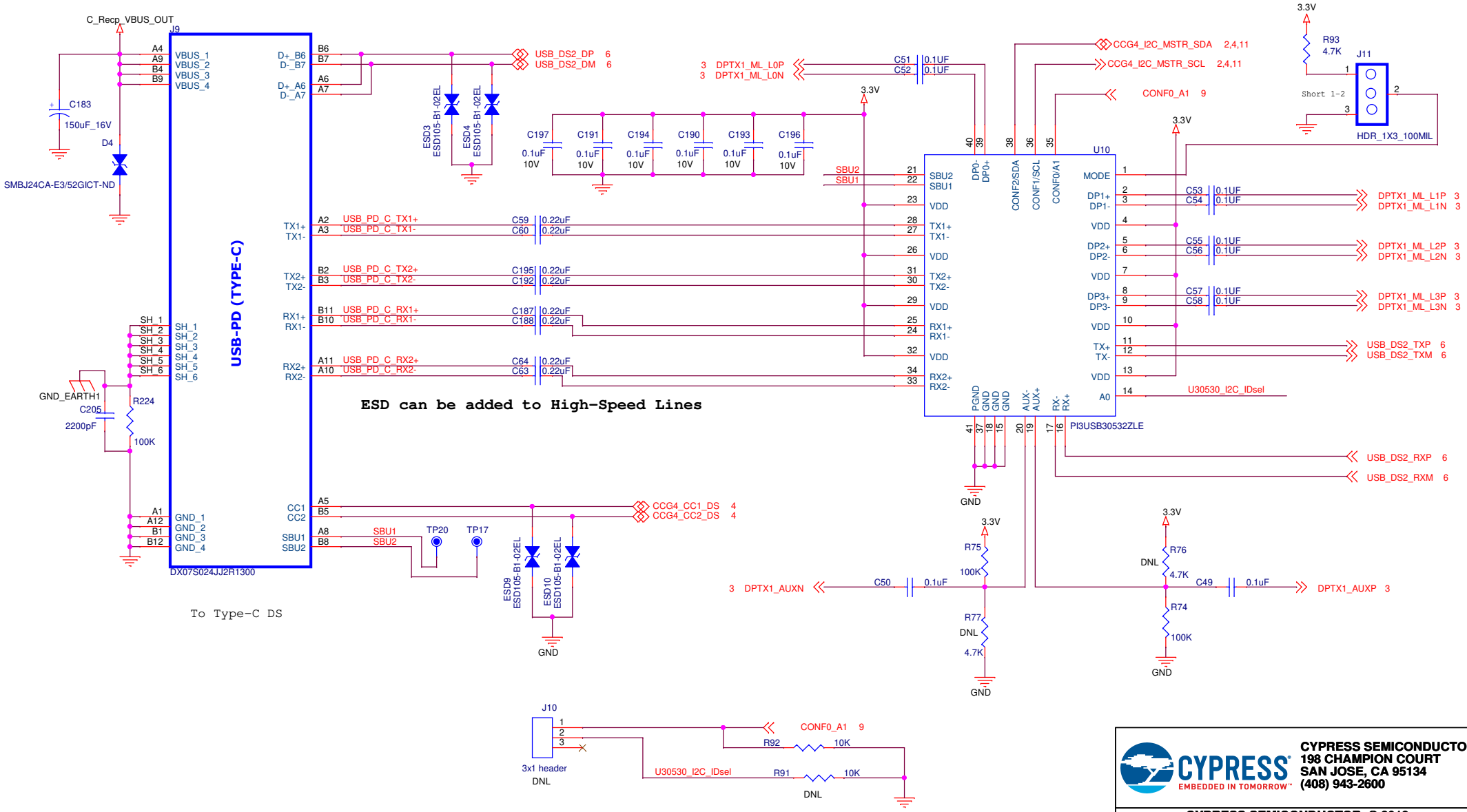

CYPRESS SEMICONDUCTOR 198 CHAMPION COURT SAN JOSE, CA 95134 (408) 943-2600			
CYPRESS SEMICONDUCTOR © 2018			
SCH Title : EZ-PD CCG4 DOCK REFERENCE DESIGN			
Page Title : TYPE-C DS MUX			
Size	Document Number	Drawn By: PRVE	Approved By: PRVE / Rev: 04
Date: Tuesday, March 27, 2018		Sheet 10 of 16	

Ethernet GX3 CYUSB3610-68LTXC

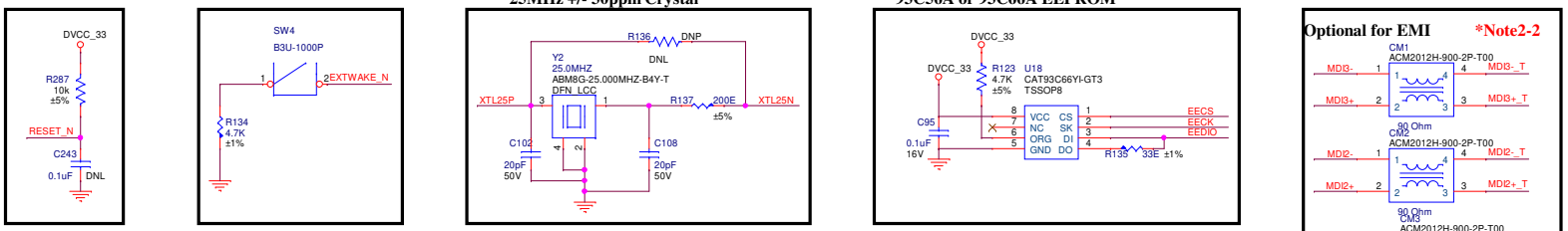

CYPRESS SEMICONDUCTOR
198 CHAMPION COURT
SAN JOSE, CA 95134
(408) 943-2600

CYPRESS SEMICONDUCTOR © 2018

SCH Title : EZ-PD CCG4 DOCK REFERENCE DESIGN				
Page Title : ETHERNET GX3 CONTROLLER				
Size	Document Number	Drawn By	Approved By	Rev
		PRVE	PRVE	04
Date: Tuesday, March 27, 2018		Sheet 11 of 16		

NCP81239 BUCK-BOOST – 5V, 7V, 8V, 9V, 12V, 15V, 20V at 3A

Power

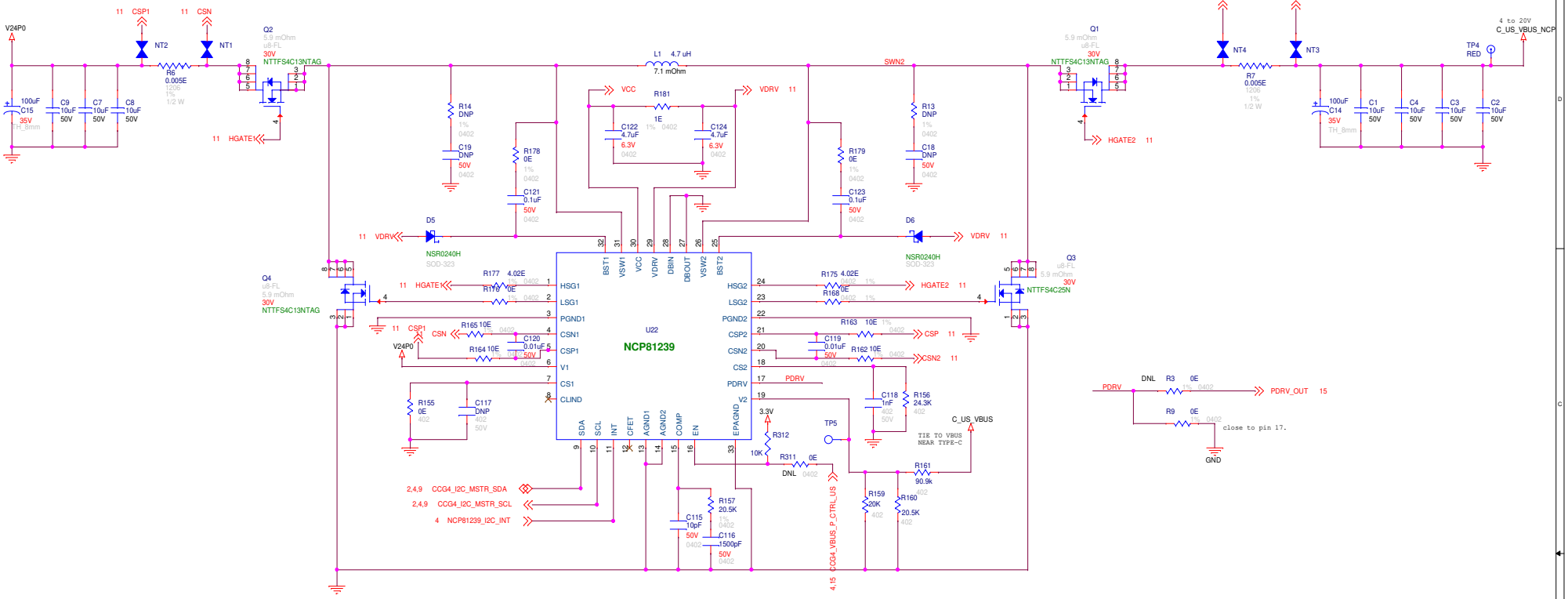

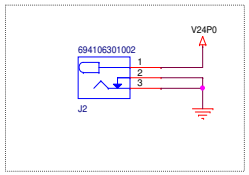

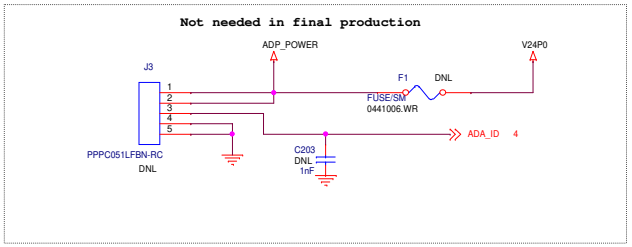

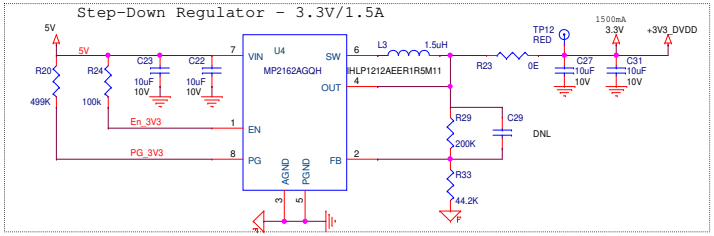

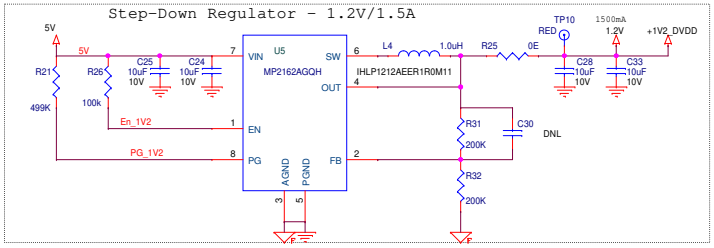

DC/DC Converter - 5V @ 6A

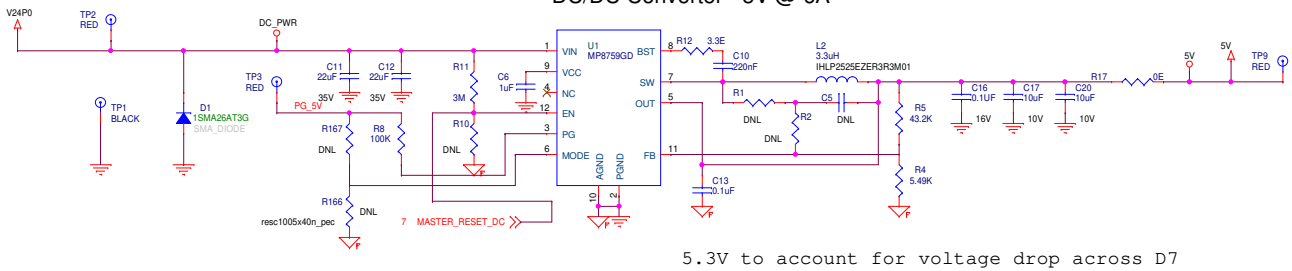

5.3V to account for voltage drop across D7

CYPRESS SEMICONDUCTOR
198 CHAMPION COURT
SAN JOSE, CA 95134
(408) 943-2600

CYPRESS SEMICONDUCTOR © 2018

SCH Title :	EZ-PD CCG4 DOCK REFERENCE DESIGN
Page Title :	POWER

Size	Document Number	Drawn By	Approved By	Rev
		PRVE	PRVE	04

Date: Tuesday, March 27, 2018 Sheet 12 of 16

LED and TestPoints

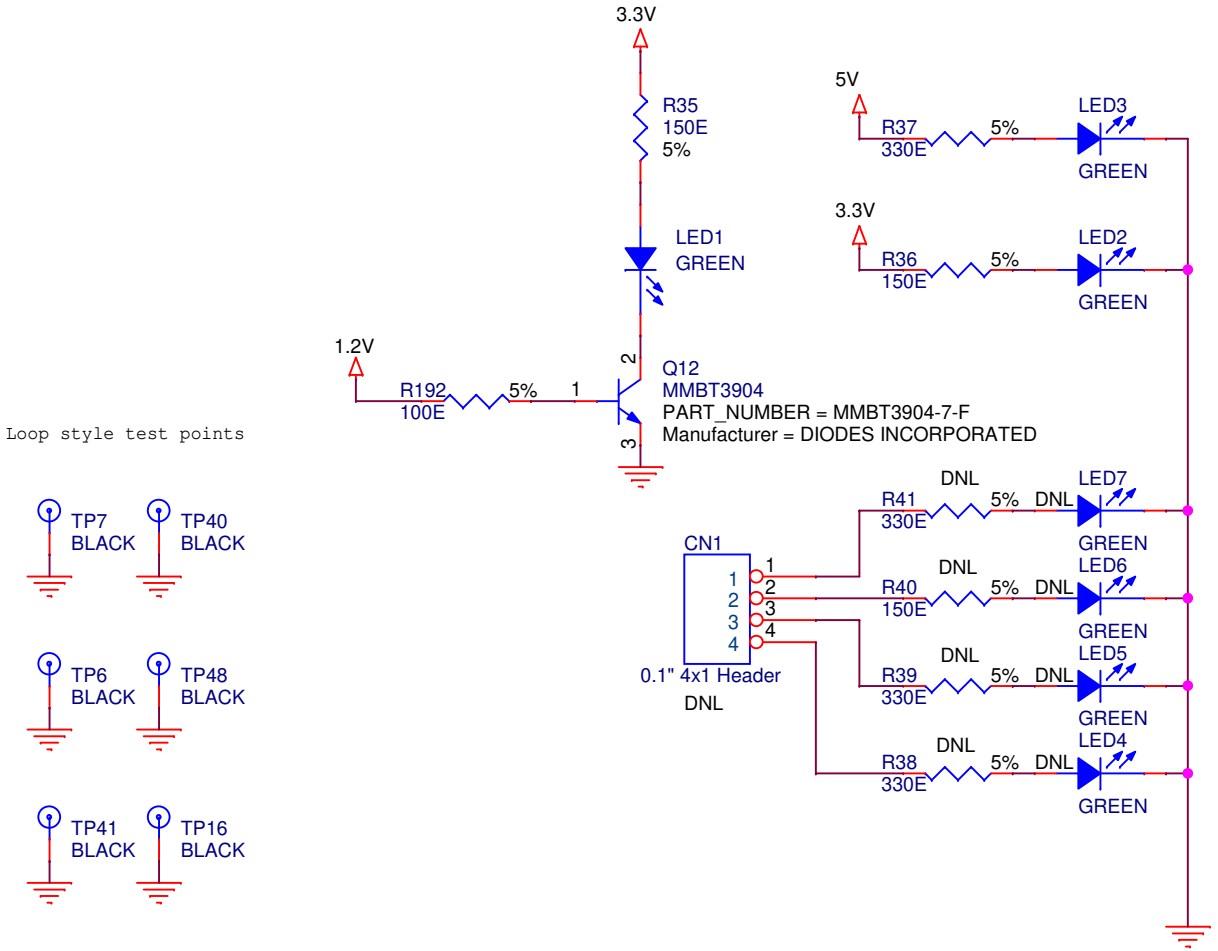

HW,MACHINE SCREW,PAN,PHILLIPS,M3

- MPMS 003 0005 PH
- MPMS 003 0005 PH
- MPMS 003 0005 PH
- MPMS 003 0005 PH

STDOFF,HEX,M3,BRASS,12MM

- R30-1001202
- R30-1001202
- R30-1001202
- R30-1001202

JUMPER CLIPS

- 2-881545-2
- 2-881545-2
- 2-881545-2
- 2-881545-2
- 2-881545-2
- 2-881545-2
- 2-881545-2
- 2-881545-2
- 2-881545-2
- 2-881545-2

TYPE-C BRACKET

- TYPE-C BRACKET

TYPE-C BRACKET SCREWS

- BRACKET SCREW
- BRACKET SCREW

TYPE-C BRACKET

- TYPE-C BRACKET

TYPE-C BRACKET SCREWS

- BRACKET SCREW
- BRACKET SCREW

CYPRESS SEMICONDUCTOR
198 CHAMPION COURT
SAN JOSE, CA 95134
(408) 943-2600

CYPRESS SEMICONDUCTOR © 2018

SCH Title : EZ-PD CCG4 DOCK REFERENCE DESIGN

Page Title : DEBUG

Size	Document Number	Drawn By	Approved By	Rev
		PRVE	PRVE	04

Date: Tuesday, March 27, 2018 Sheet 13 of 16

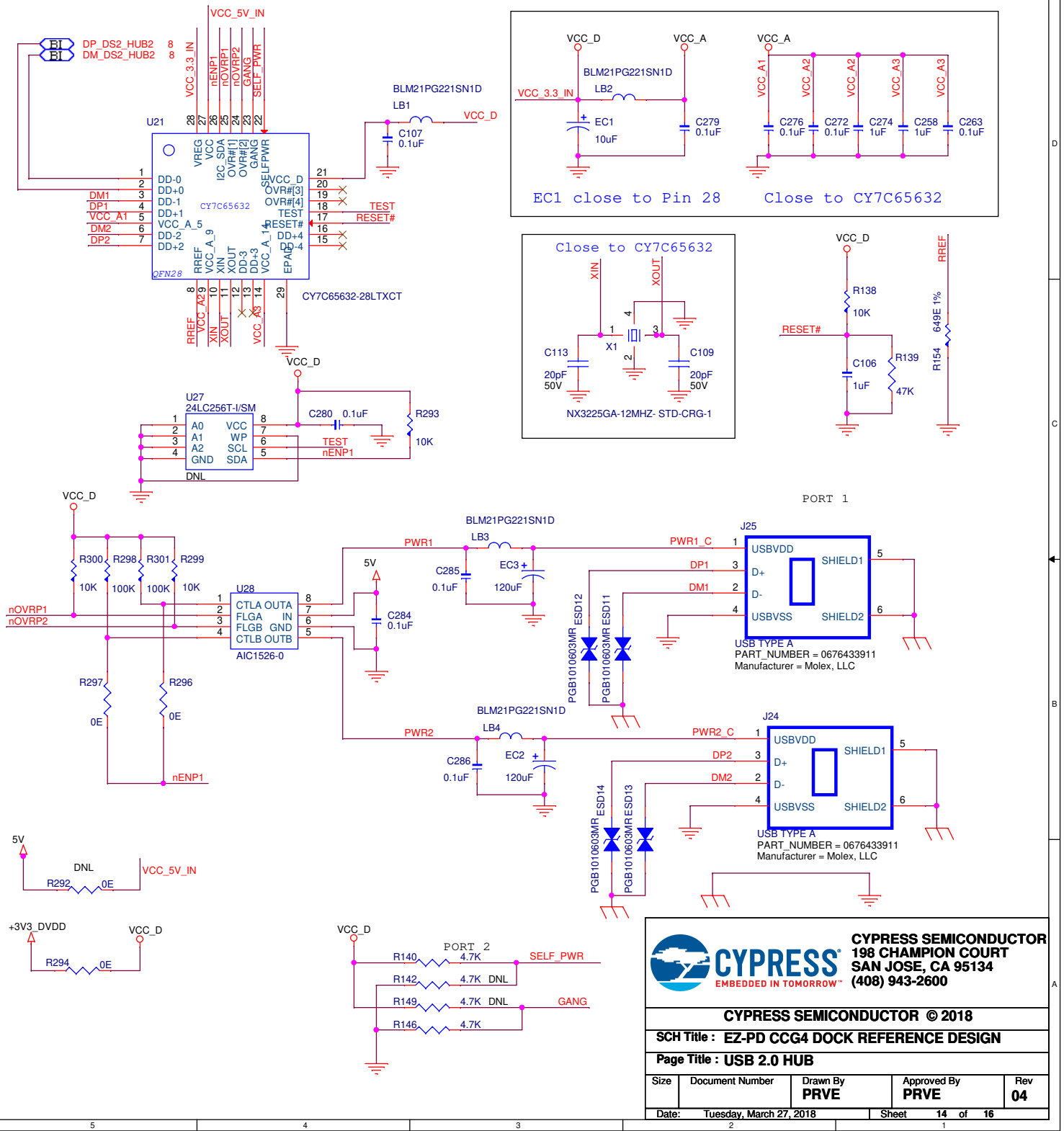

CYPRESS SEMICONDUCTOR
198 CHAMPION COURT
SAN JOSE, CA 95134
(408) 943-2600

CYPRESS SEMICONDUCTOR © 2018

SCH Title : EZ-PD CCG4 DOCK REFERENCE DESIGN

Page Title : USB 2.0 HUB

Size	Document Number	Drawn By	Approved By	Rev
		PRVE	PRVE	04

Date: Tuesday, March 27, 2018 Sheet 14 of 16

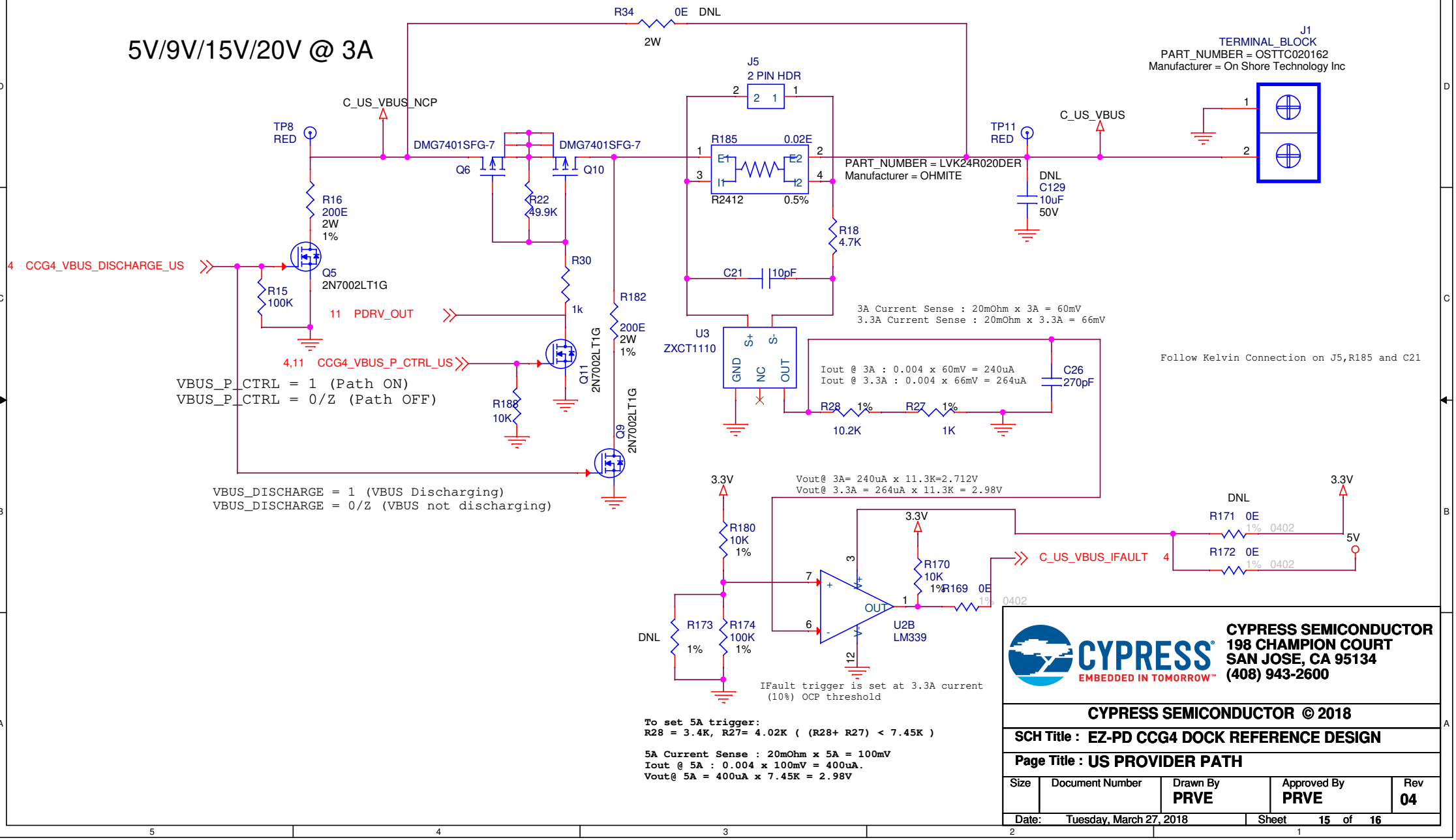

CYPRESS SEMICONDUCTOR
198 CHAMPION COURT
SAN JOSE, CA 95134
(408) 943-2600

CYPRESS SEMICONDUCTOR © 2018

SCH Title : EZ-PD CCG4 DOCK REFERENCE DESIGN

Page Title : US PROVIDER PATH

Size	Document Number	Drawn By	Approved By	Rev
		PRVE	PRVE	04

Date: Tuesday, March 27, 2018 Sheet 15 of 16

5V@ 3A

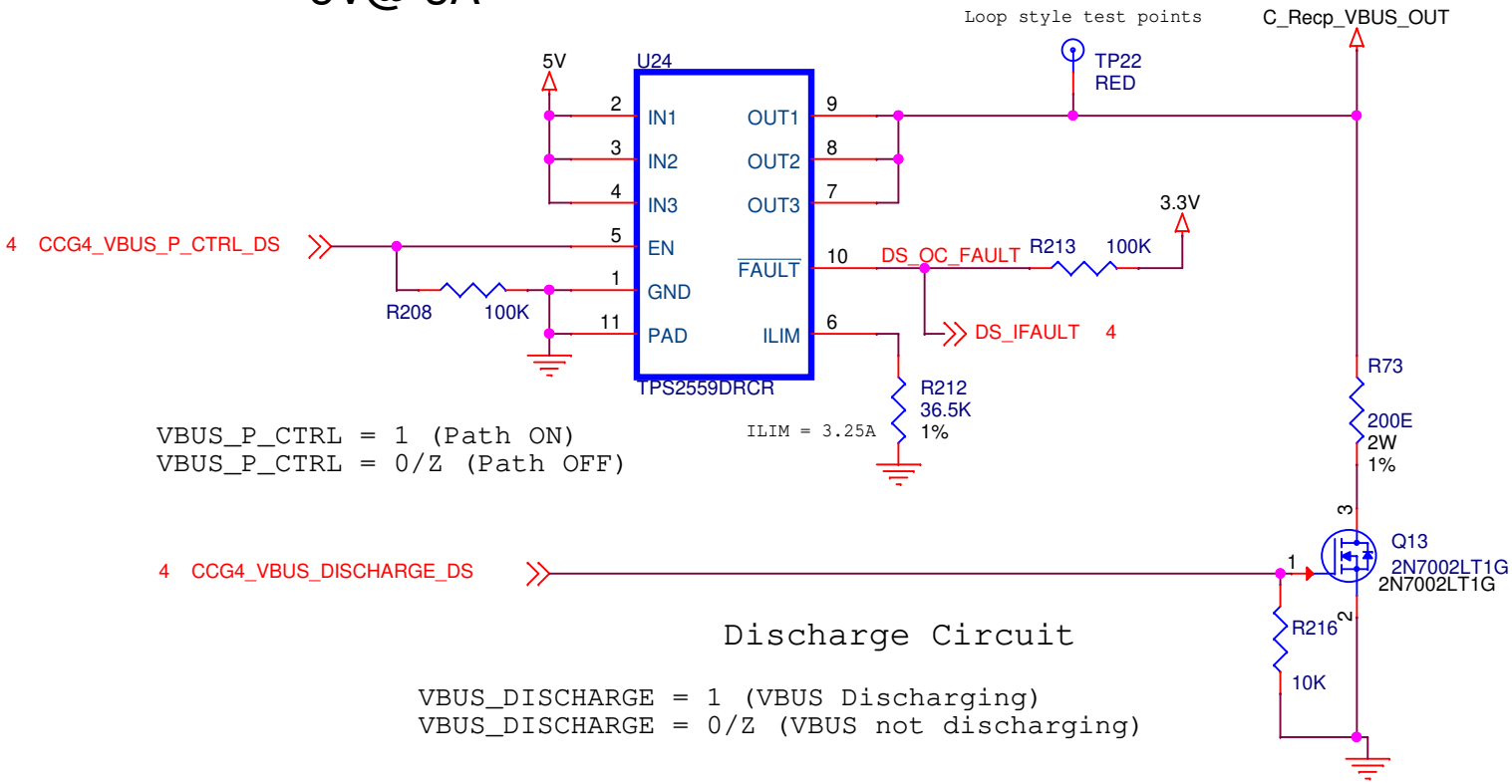

VBUS_P_CTRL = 1 (Path ON)
VBUS_P_CTRL = 0/Z (Path OFF)

Discharge Circuit

VBUS_DISCHARGE = 1 (VBUS Discharging)
VBUS_DISCHARGE = 0/Z (VBUS not discharging)

CYPRESS SEMICONDUCTOR
198 CHAMPION COURT
SAN JOSE, CA 95134
(408) 943-2600

CYPRESS SEMICONDUCTOR © 2018

SCH Title : EZ-PD CCG4 DOCK REFERENCE DESIGN				
Page Title : DS PROVIDER PATH				
Size	Document Number	Drawn By PRVE	Approved By PRVE	Rev 04
Date: Tuesday, March 27, 2018		Sheet 16 of 16		