CYW9P62S1-43438CAR-01
PSoC 6 (1M) with CYW43438 AzureWave PCB MOD Carrier Module

CONTENTS

PAGE	DESCRIPTION
01	Title, Table of Contents & Drawing Numbers
02	Block Diagram
03	AzureWave Module Power and Signals
04	Carrier Module Power, PSoC 6 MCU & Wi-Fi BT signals
05	Revision History

Drawing Numbers

PCBA	121-60560-01
PCB	600-60560-01
FAB DRW	610-60560-01
ASSY DRW	620-60560-01
SCH DRW	630-60560-01

CYPRESS SEMICONDUCTOR
198 CHAMPION COURT
SAN JOSE, CA 95134
(408) 943-2600

CYPRESS SEMICONDUCTOR © 2019

SCH Title : PSoC 6 (1M) with CYW43438 AZW MOD Carr. Mod.

Page Title : Title Page

Size	Document Number	Drawn By	Approved By	Rev
A4	630-60560-01	AARA	RKAD	01

Date: Thursday, October 24, 2019 Sheet 1 of 5

Block Diagram

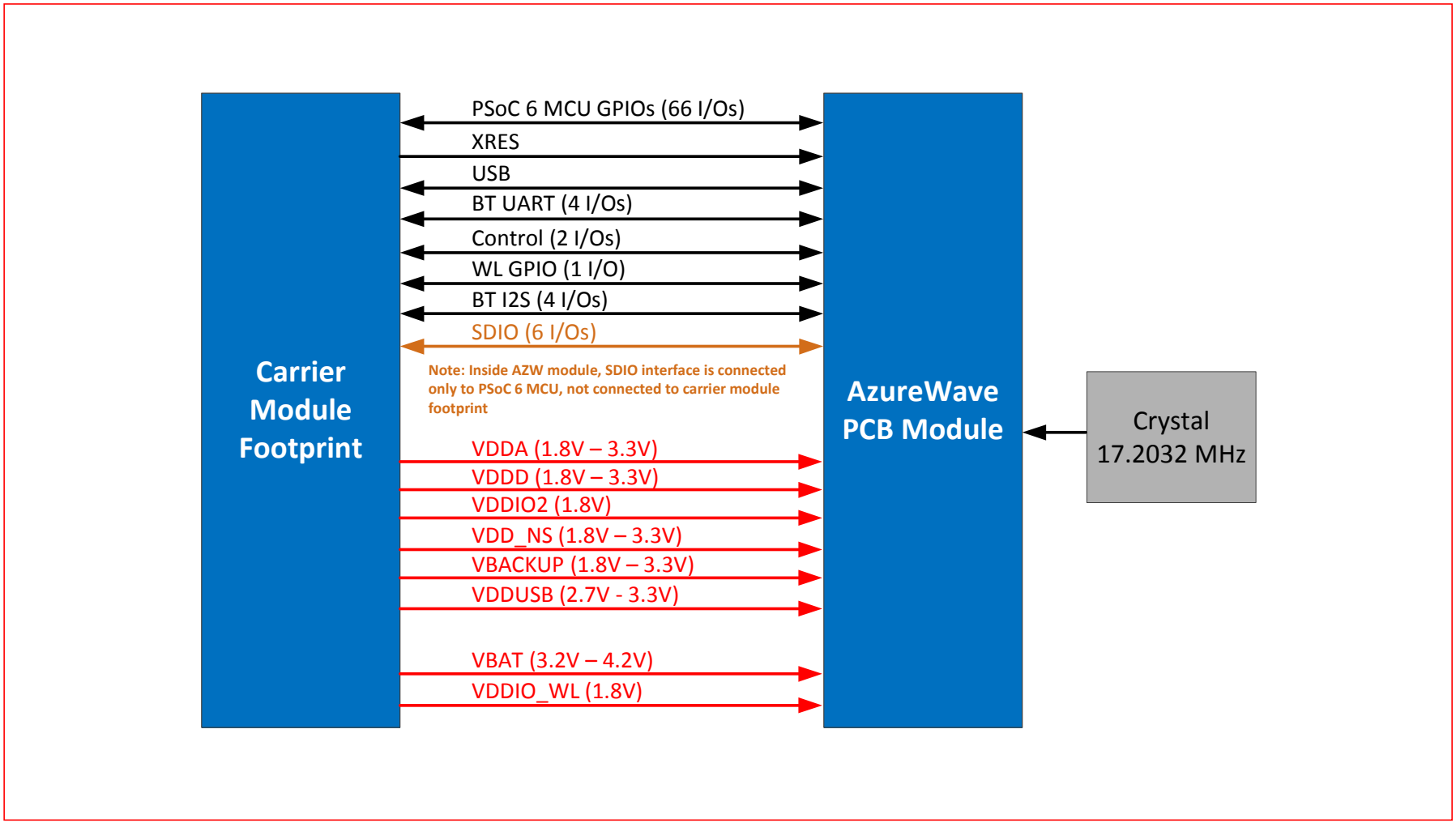

CYPRESS SEMICONDUCTOR
198 CHAMPION COURT
SAN JOSE, CA 95134
(408) 943-2600

CYPRESS SEMICONDUCTOR © 2019

SCH Title : PSoC 6 (1M) with CYW43438 AZW MOD Carr. Mod.				
Page Title : Block Diagram				
Size: A4	Document Number: 630-60560-01	Drawn By: AARA	Approved By: RKAD	Rev: 01
Date: Thursday, October 24, 2019		Sheet 2 of 5		

AzureWave Module Power

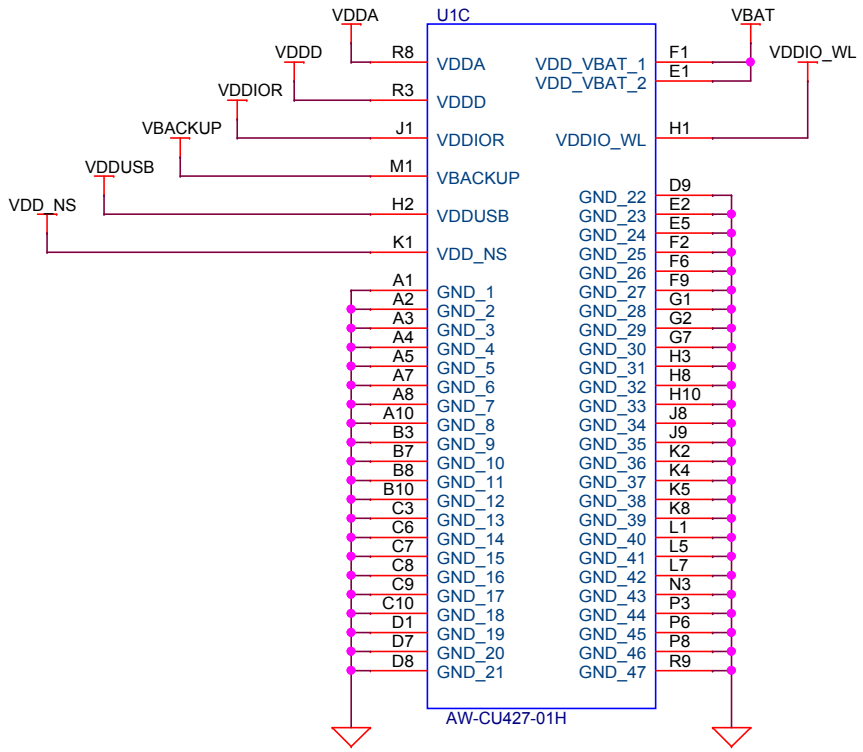

AzureWave Module PSoC 6 MCU Signals

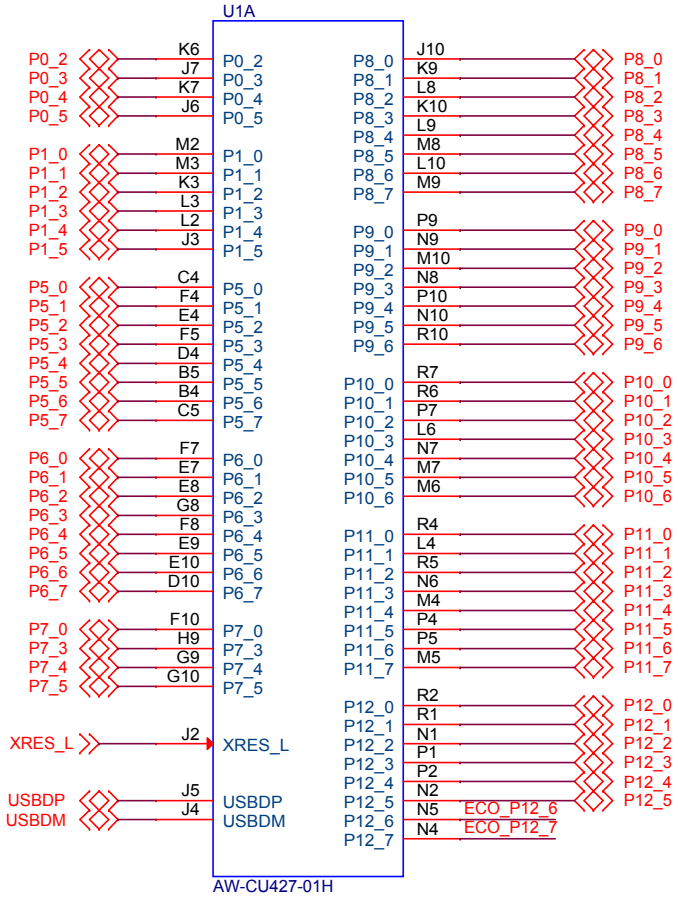

AzureWave Module Wi-Fi BT Signals

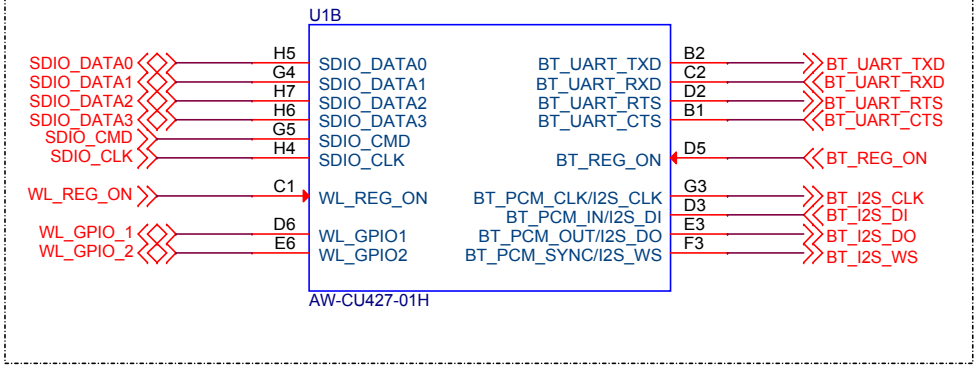

ECO

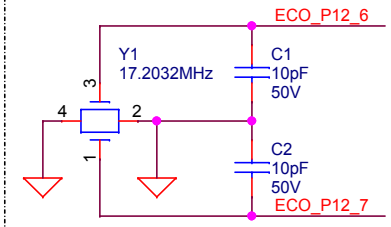

CYPRESS SEMICONDUCTOR
198 CHAMPION COURT
SAN JOSE, CA 95134
(408) 943-2600

CYPRESS SEMICONDUCTOR © 2019

SCH Title : PSoC 6 (1M) with CYW43438 AZW MOD Carr. Mod.

Page Title : AZW Module Power and Signals

Size	Document Number	Drawn By	Approved By	Rev
A4	630-60560-01	AARA	RKAD	01

Date: Thursday, October 24, 2019 Sheet 3 of 5

Carrier Module Power

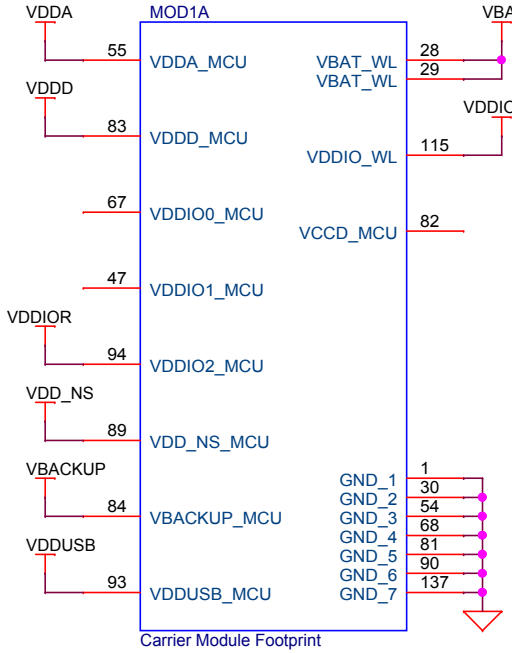

Carrier Module PSoC 6 MCU Signals

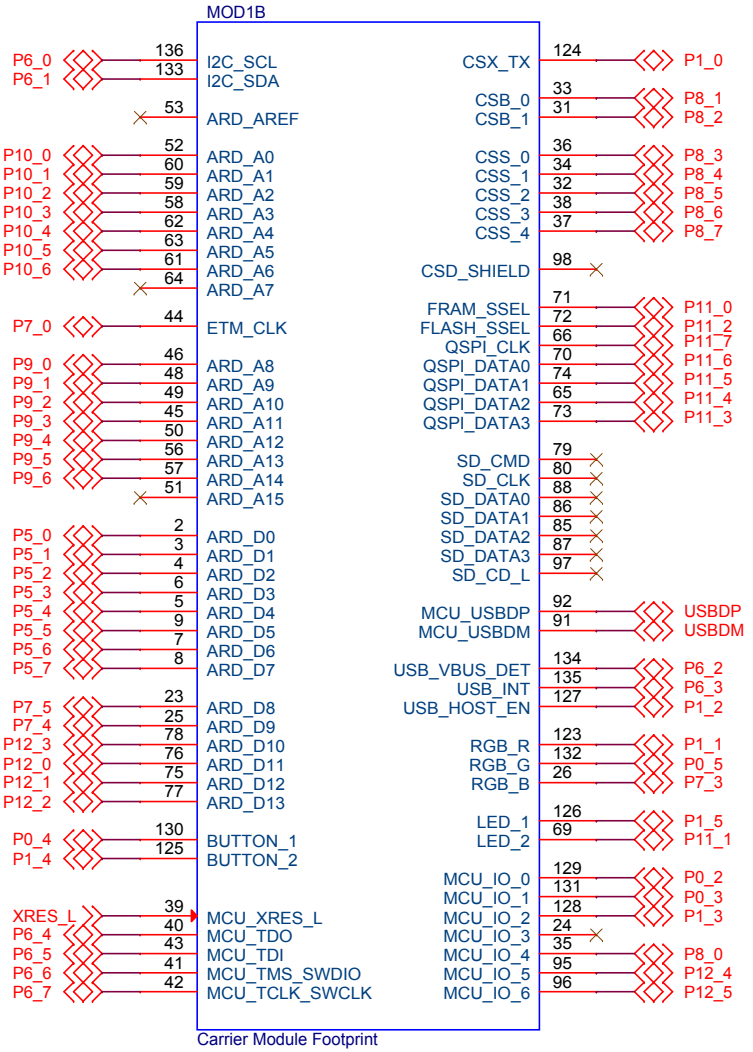

Carrier Module Wi-Fi BT Signals

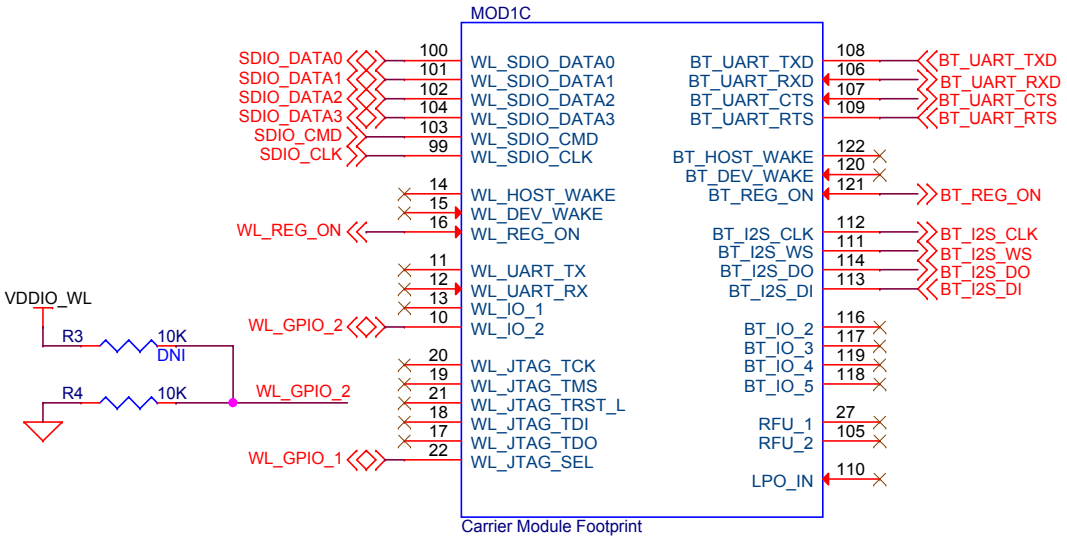

CYPRESS SEMICONDUCTOR
198 CHAMPION COURT
SAN JOSE, CA 95134
(408) 943-2600

CYPRESS SEMICONDUCTOR © 2019

SCH Title :	PSoC 6 (1M) with CYW43438 AZW MOD Carr. Mod.
Page Title :	Carrier Module Power, PSoC 6 MCU & Wi-Fi BT signals

Size	Document Number	Drawn By	Approved By	Rev
A4	630-60560-01	AARA	RKAD	01

Date: Thursday, October 24, 2019 Sheet 4 of 5

REVISION HISTORY

REV	DESCRIPTION OF CHANGE	Orig. of Change	DATE
01	Initial Release	AARA	2019/10/24

CYPRESS SEMICONDUCTOR
198 CHAMPION COURT
SAN JOSE, CA 95134
(408) 943-2600

CYPRESS SEMICONDUCTOR © 2019

SCH Title : PSoC 6 (1M) with CYW43438 AZW MOD Carr. Mod.

Page Title : Revision History

Size	Document Number	Drawn By	Approved By	Rev
A4	630-60560-01	AARA	RKAD	01

Date: Thursday, October 24, 2019 Sheet 5 of 5