CYW920721M2EPA1
CYPRESS PROPRIETARY M.2 BT/BLE RADIO MODULE

CONTENTS

PAGE	DESCRIPTION
01	Title Page
02	Block Diagram
03	Baseband
04	Radio
05	External PA
06	Interface to Baseboard
07	Revision History

Drawing Numbers

PCBA	121-90675-01
PCB	600-90675-01
FAB DRW	610-90675-01
ASSY DRW	620-90675-01
SCH DRW	630-90675-01

Legal Disclaimer :
The information given in this document shall in no event be regarded as a guarantee of conditions or characteristics. With respect to any examples or hints given herein, any typical values stated herein and/or any information regarding the application of the device, Infineon Technologies hereby disclaims any and all warranties and liabilities of any kind, including without limitation, warranties of non-infringement of intellectual property rights of any third party.

SCH Title : CYW920721M2EPA1				
Page Title: Title Page				
Size	Document Number	Drawn By	Approved By	Rev
A4	630--90675-01	CLEU		2.2
Date: Monday, January 17, 2022		Sheet 1 of 7		

Block Diagram

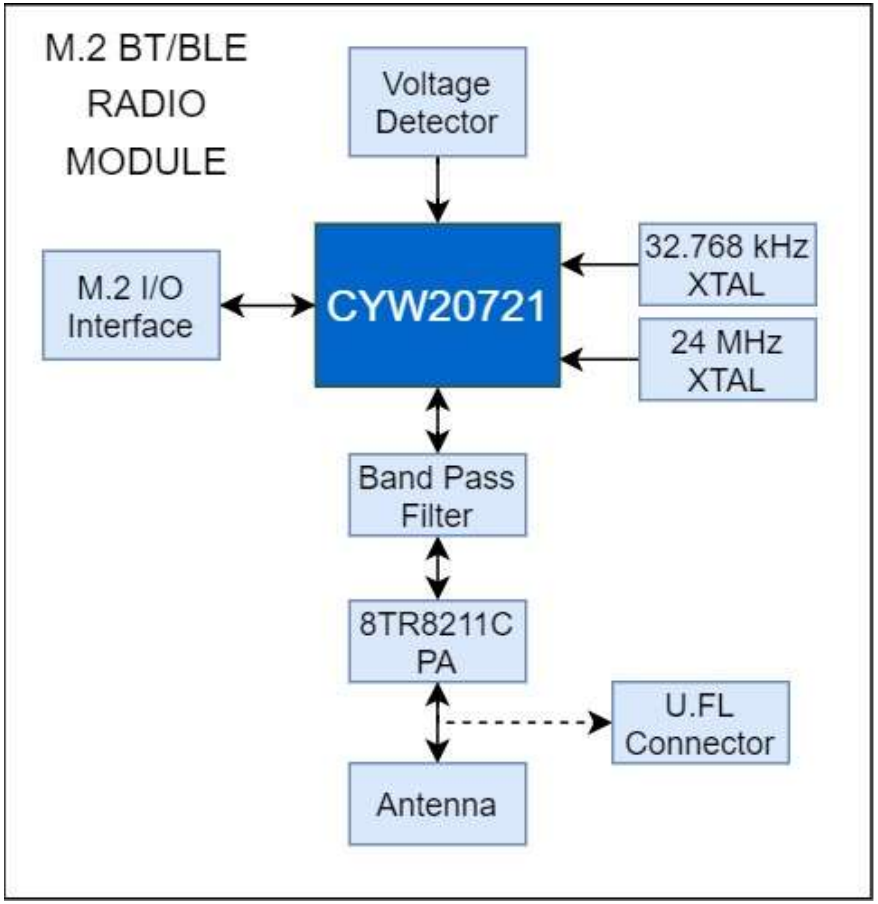

Legal Disclaimer :
The information given in this document shall in no event be regarded as a guarantee of conditions or characteristics. With respect to any examples or hints given herein, any typical values stated herein and/or any information regarding the application of the device, Infineon Technologies hereby disclaims any and all warranties and liabilities of any kind, including without limitation, warranties of non-infringement of intellectual property rights of any third party.

SCH Title : CYW920721M2EPA1				
Page Title: Block Diagram				
Size	Document Number	Drawn By	Approved By	Rev
A4	630--90675-01	CLEU		2.2
Date: Monday, January 17, 2022		Sheet 2 of 7		

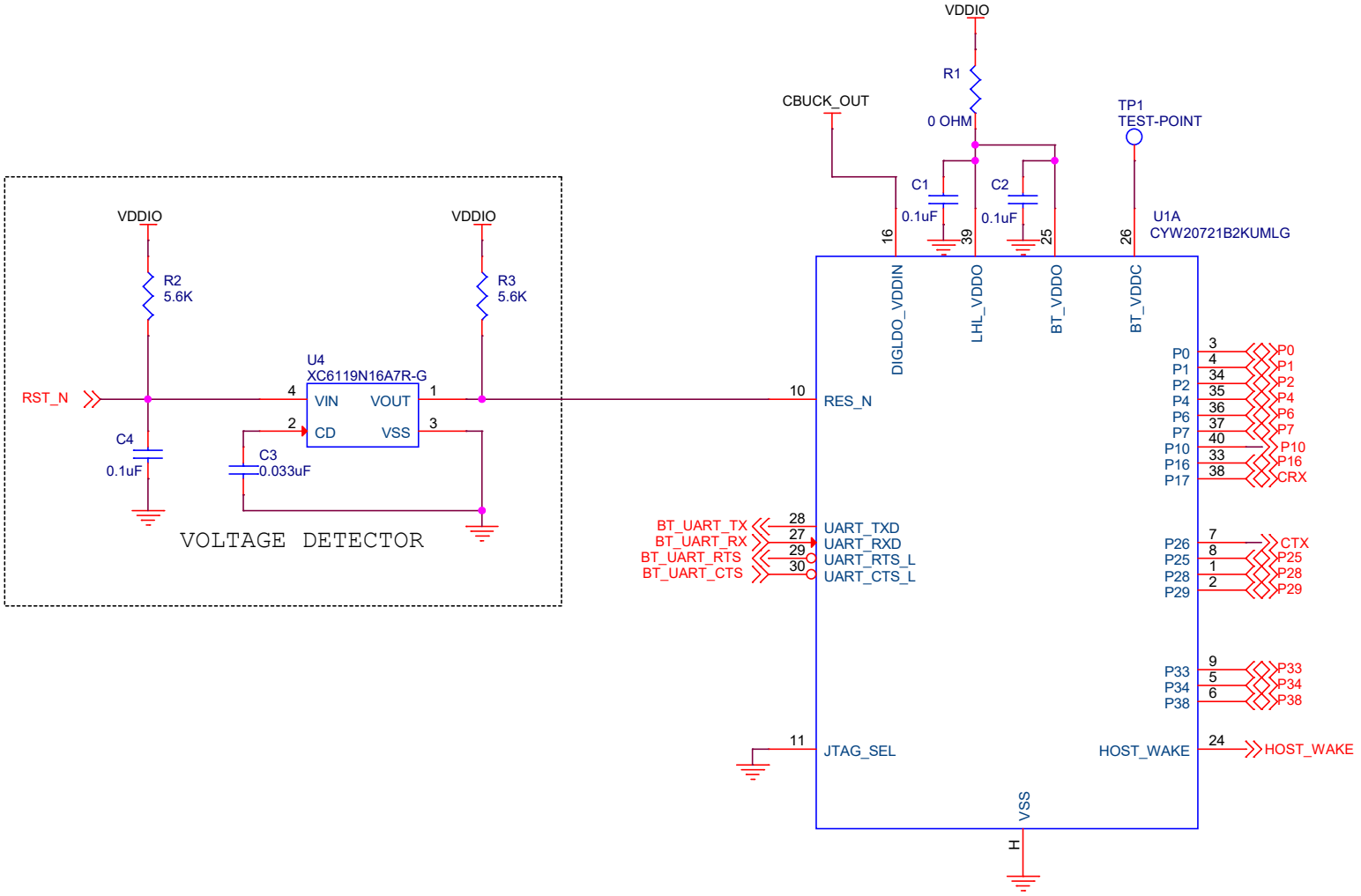

Legal Disclaimer :
The information given in this document shall in no event be regarded as a guarantee of conditions or characteristics. With respect to any examples or hints given herein, any typical values stated herein and/or any information regarding the application of the device, Infineon Technologies hereby disclaims any and all warranties and liabilities of any kind, including without limitation, warranties of non-infringement of intellectual property rights of any third party.

SCH Title : CYW920721M2EPA1				
Page Title: Baseband				
Size	Document Number	Drawn By	Approved By	Rev
A4	**630--90675-01**	**CLEU**		**2.2**
Date: Monday, January 17, 2022		Sheet **3** of **7**		

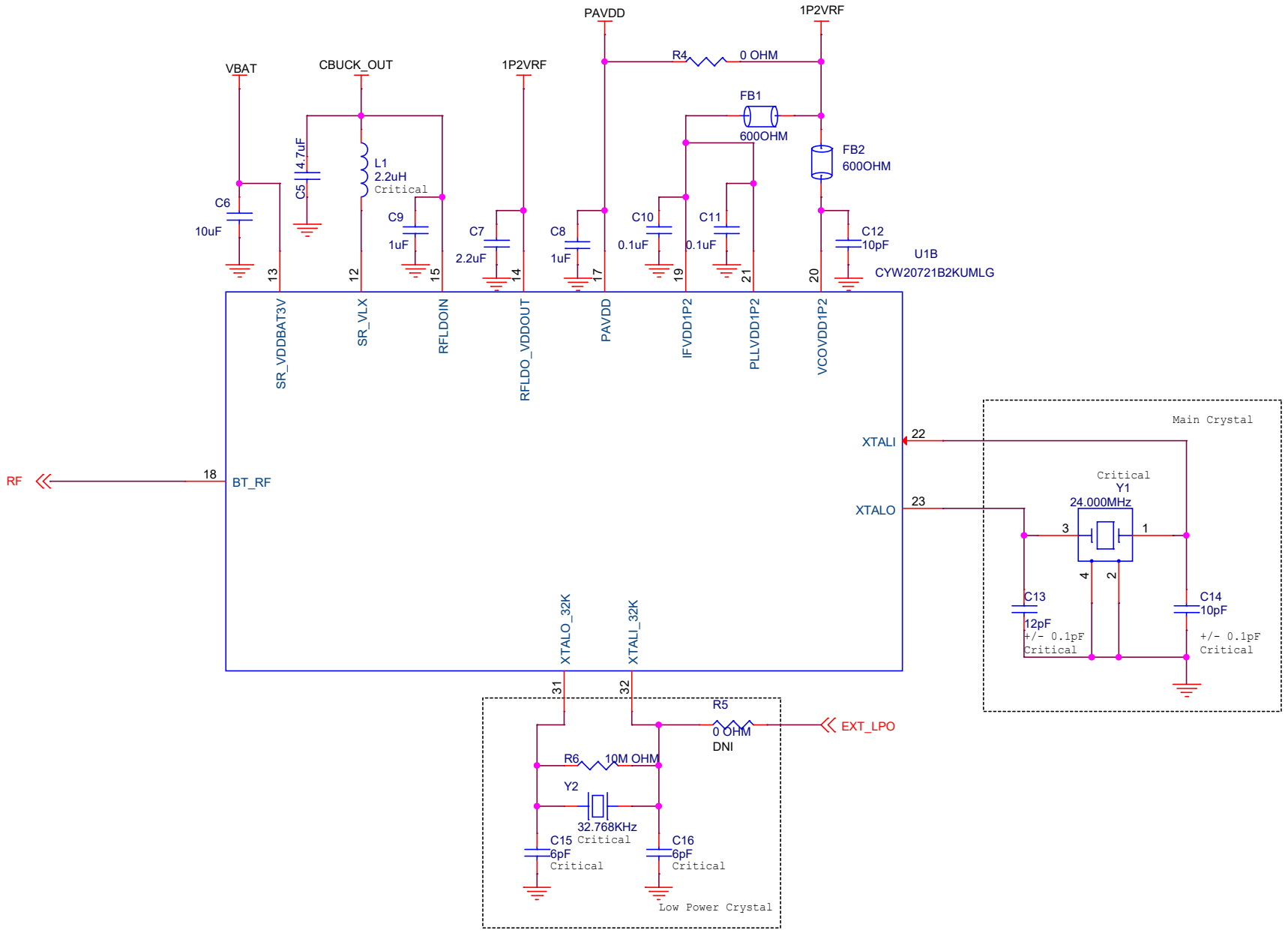

Legal Disclaimer :
The information given in this document shall in no event be regarded as a guarantee of conditions or characteristics. With respect to any examples or hints given herein, any typical values stated herein and/or any information regarding the application of the device, Infineon Technologies hereby disclaims any and all warranties and liabilities of any kind, including without limitation, warranties of non-infringement of intellectual property rights of any third party.

SCH Title : CYW920721M2EPA1				
Page Title: Radio				
Size	Document Number	Drawn By	Approved By	Rev
A4	**630--90675-01**	**CLEU**		**2.2**
Date: Monday, January 17, 2022		Sheet **4** of **7**		

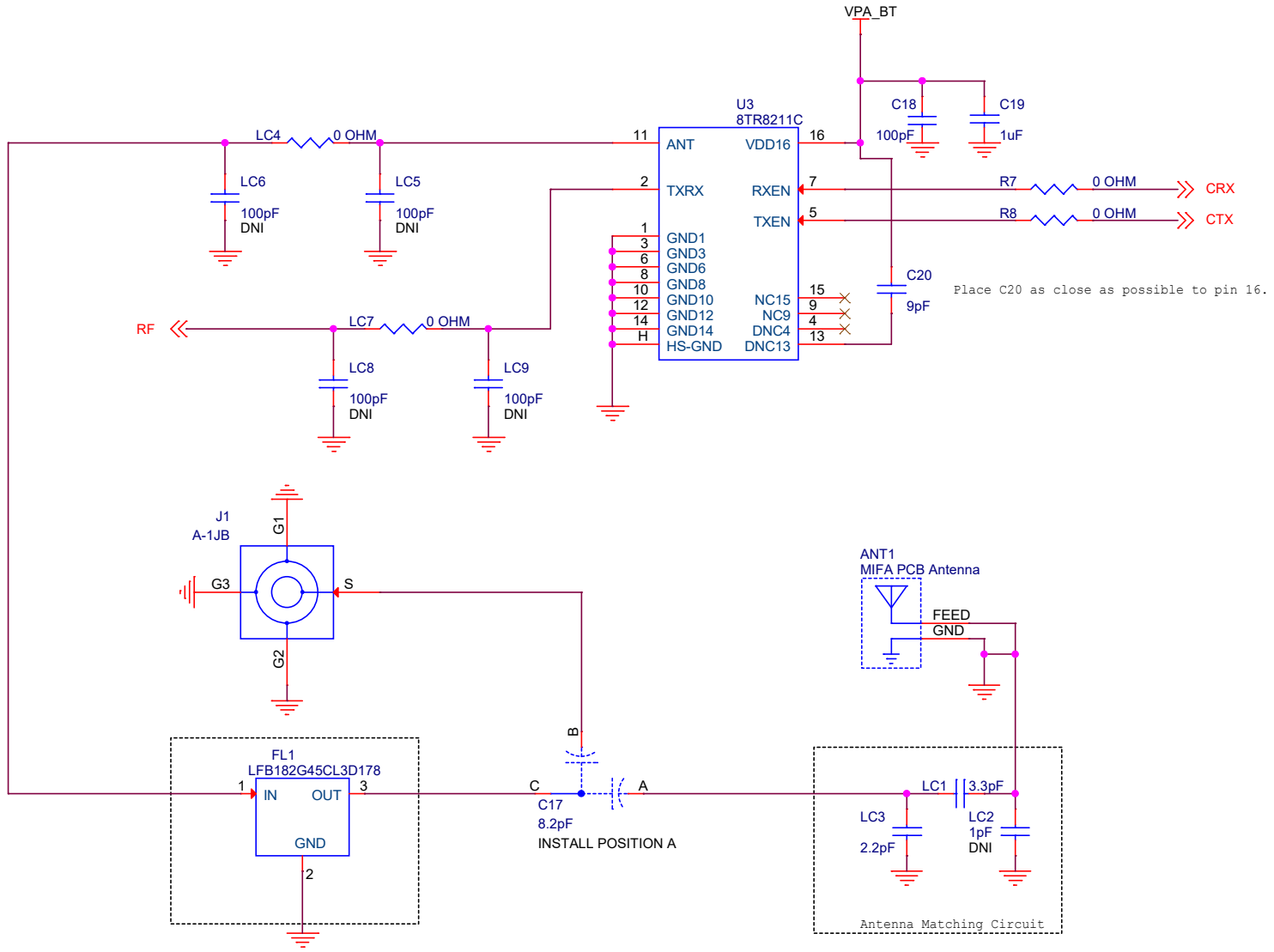

Legal Disclaimer :
The information given in this document shall in no event be regarded as a guarantee of conditions or characteristics. With respect to any examples or hints given herein, any typical values stated herein and/or any information regarding the application of the device, Infineon Technologies hereby disclaims any and all warranties and liabilities of any kind, including without limitation, warranties of non-infringement of intellectual property rights of any third party.

SCH Title : CYW920721M2EPA1				
Page Title: External PA				
Size	Document Number	Drawn By	Approved By	Rev
A4	630--90675-01	CLEU		2.2
Date: Monday, January 17, 2022		Sheet 5 of 7		

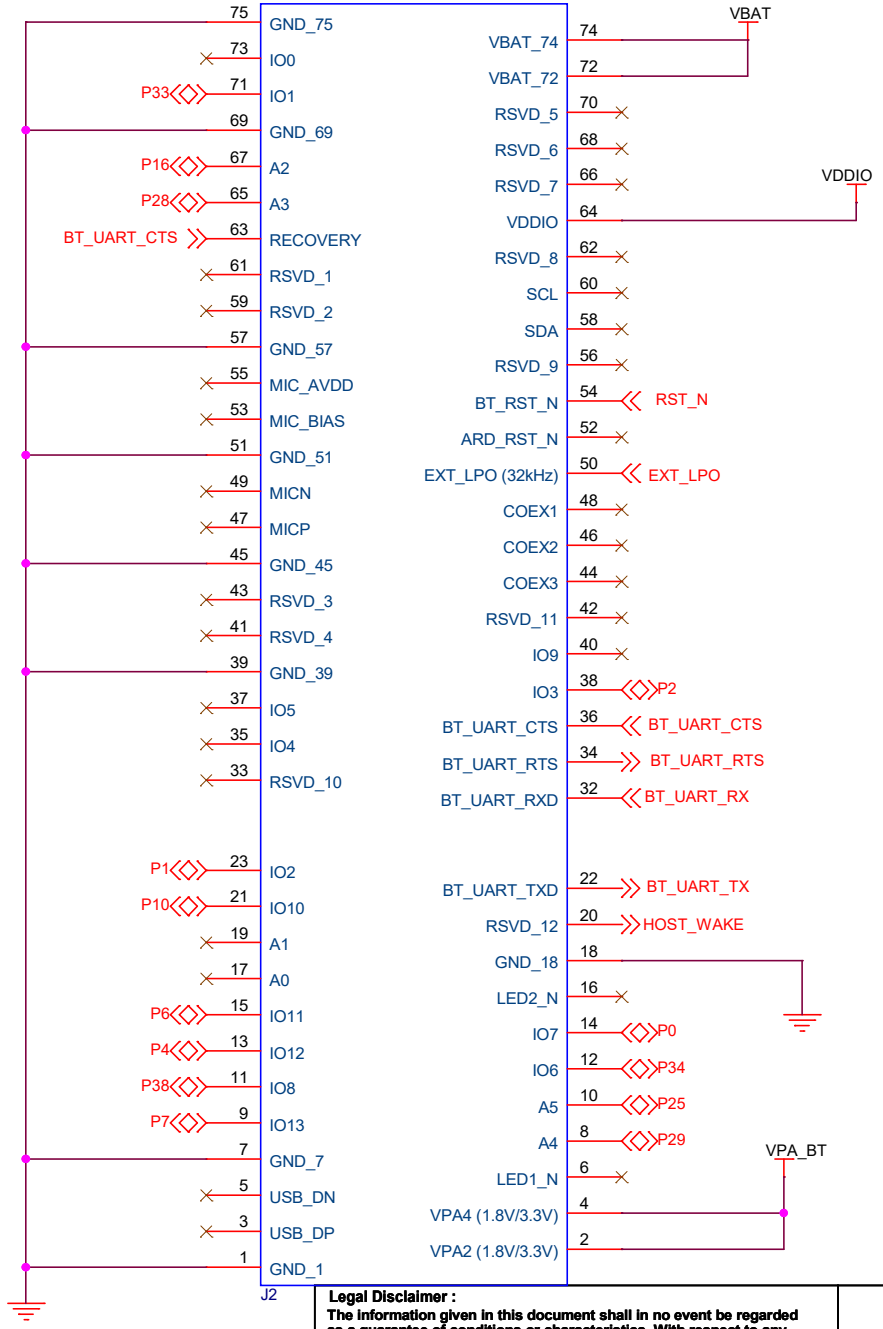

Legal Disclaimer :
The information given in this document shall in no event be regarded as a guarantee of conditions or characteristics. With respect to any examples or hints given herein, any typical values stated herein and/or any information regarding the application of the device, Infineon Technologies hereby disclaims any and all warranties and liabilities of any kind, including without limitation, warranties of non-infringement of intellectual property rights of any third party.

SCH Title : CYW920721M2EPA1

Page Title: Interface to Baseboard

Size	Document Number	Drawn By	Approved By	Rev
A4	630--90675-01	CLEU		2.2

Date: Monday, January 17, 2022 Sheet 6 of 7

REVISION HISTORY

REV	DESCRIPTION OF CHANGE	Orig. of Change	DATE
1.0	Initial Release, based on CYW920721WCD3EPA	MILI	2019/06/05
1.1	DNI LC2, LC5, LC6, LC8, LC9	MILI	2019/08/22
2.0	Updated U3 to 8TR8211C. Reassign GPIOs	CLEU	6/15/2020
2.1	Updated Y1 to TXC 7R24070007	CLEU	11/19/2020
2.2	Updated CL1 to 3.3pF and CL3 to 2.2pF	CLEU	1/17/2022

Legal Disclaimer :
The information given in this document shall in no event be regarded as a guarantee of conditions or characteristics. With respect to any examples or hints given herein, any typical values stated herein and/or any information regarding the application of the device, Infineon Technologies hereby disclaims any and all warranties and liabilities of any kind, including without limitation, warranties of non-infringement of intellectual property rights of any third party.

SCH Title : CYW920721M2EPA1

Page Title: Revision History

Size	Document Number	Drawn By	Approved By	Rev
A4	630--90675-01	CLEU		2.2

Date: Monday, January 17, 2022 Sheet 7 of 7