Revision History:

Rev 1.0 (07/09/19)

1) Initial Release

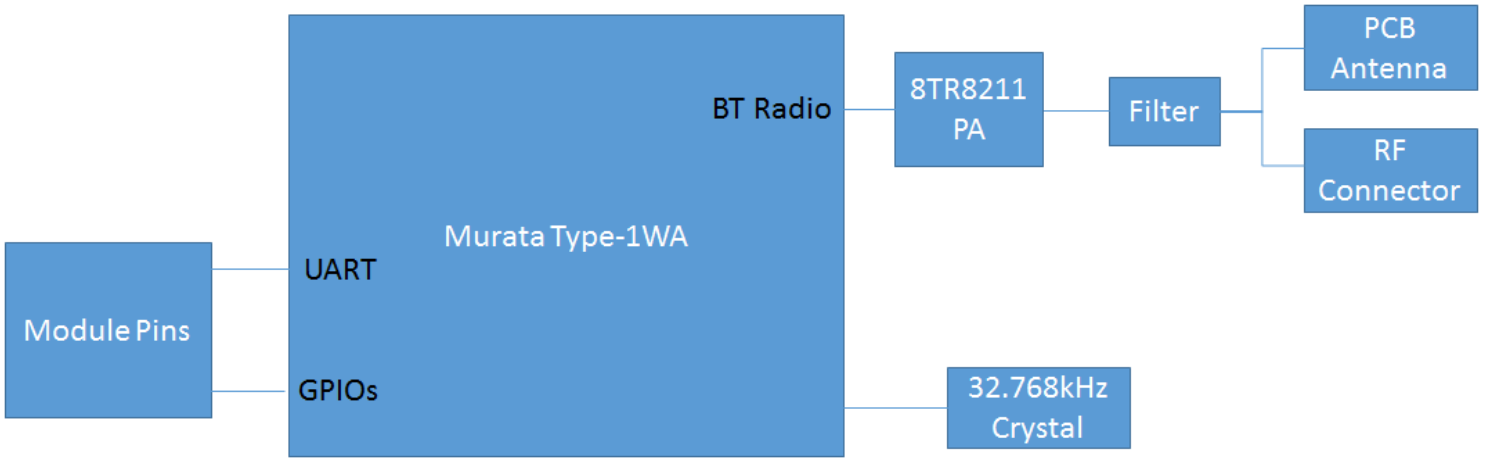

PAGE1: COVER PAGE
PAGE2: BASEBAND
PAGE3: RADIO
PAGE4: MODULE IO

Cypress Proprietary & Confidential

Title	CYW920721B2WCD2EPA Cover Page	
Size	Document Number 630-90678-01	Rev 1.0
Date: Monday, July 15, 2019	Sheet 1 of 4	

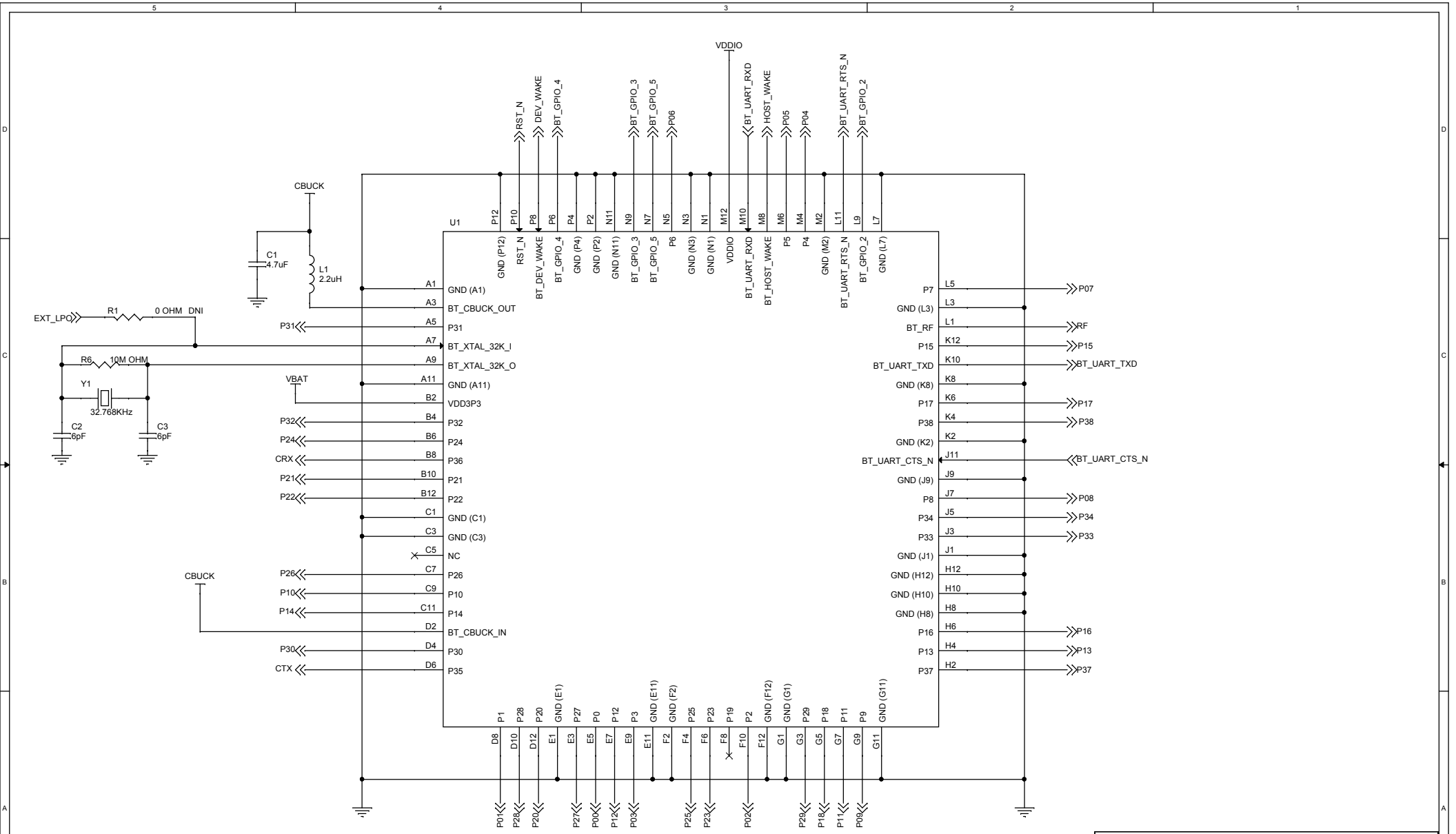

Cypress Proprietary & Confidential

Title	CYW920721B2WCD2EPA Baseband	
Size	Document Number: 630-90678-01	Rev: 1.0
Date: Monday, July 15, 2019	Sheet 2 of 4	

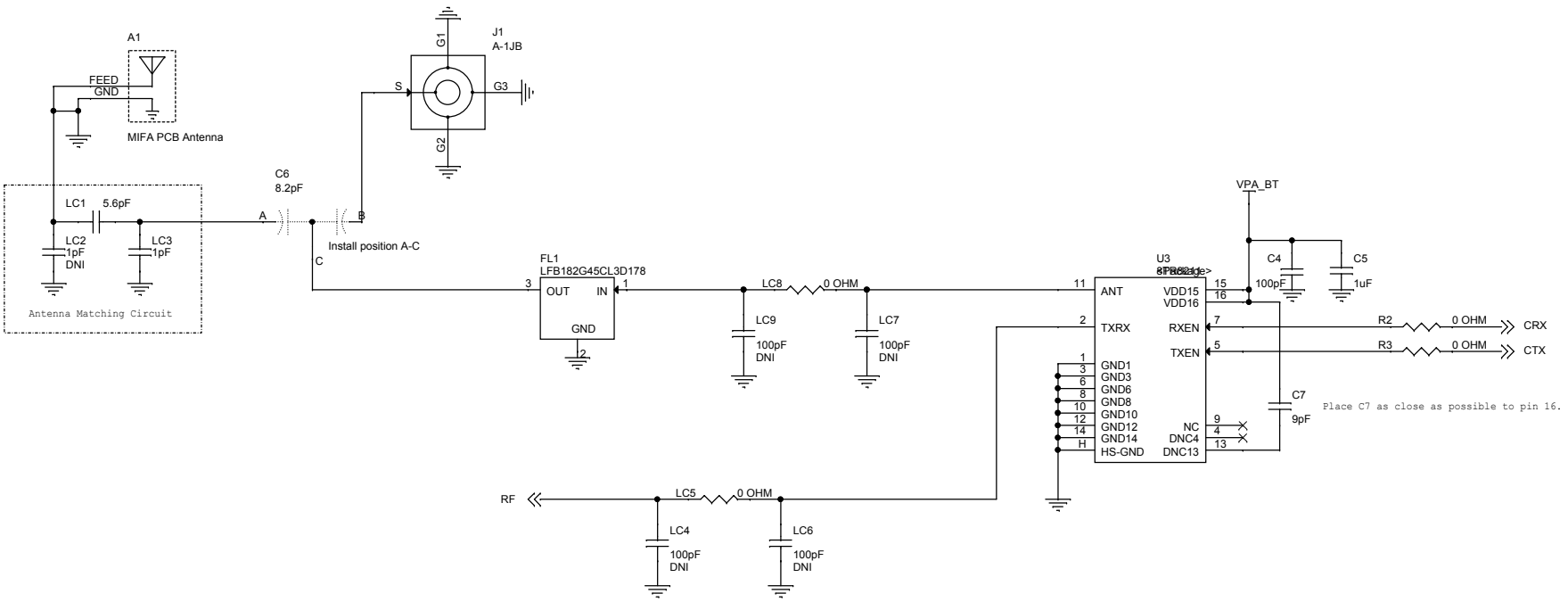

Title	CYW920721B2WCD2EPA EPA	
Size	Document Number 630-90678-01	Rev 1.0
Date: Monday, July 15, 2019	Sheet 3 of 4	

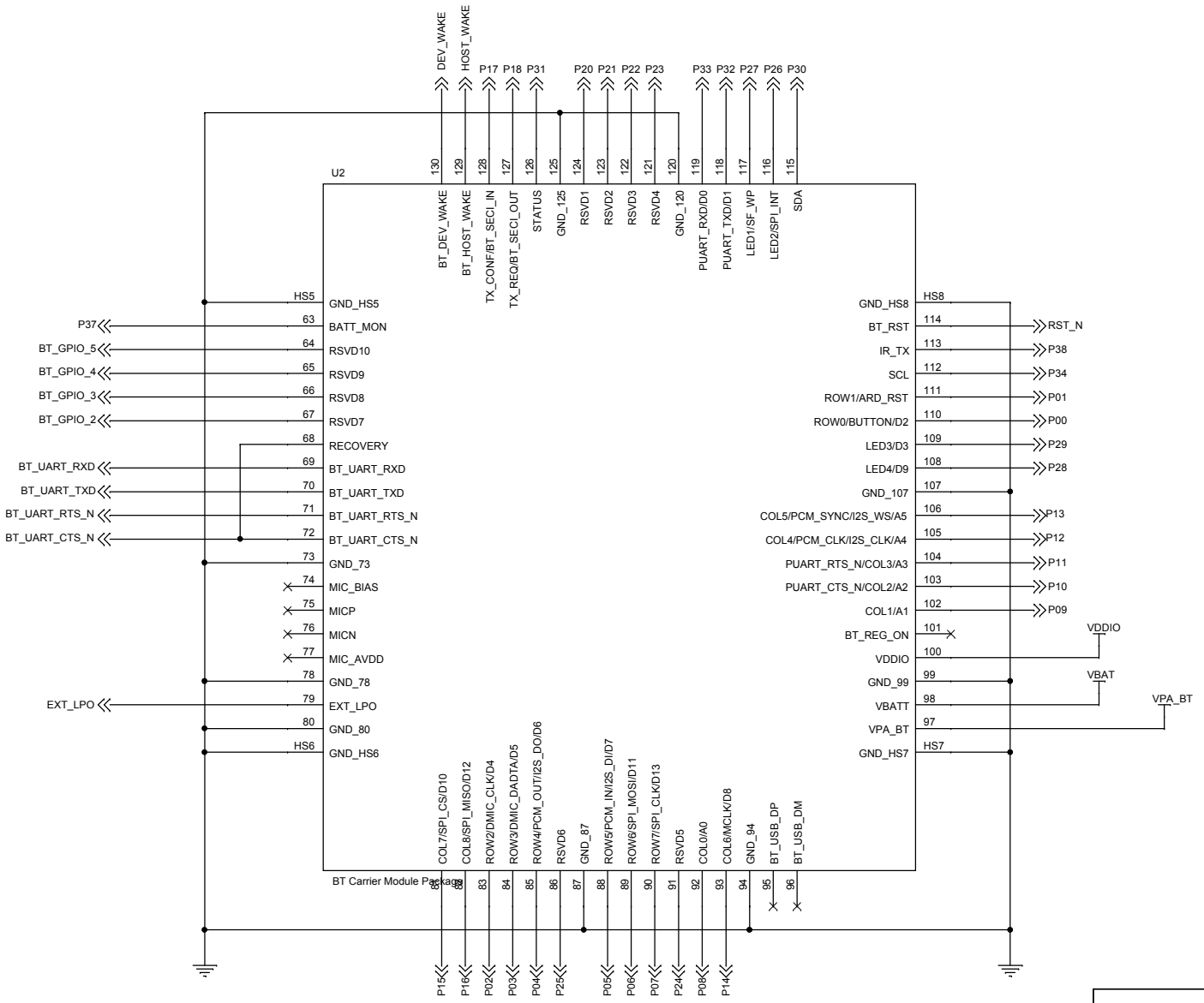

Cypress Proprietary & Confidential

Title	CYW920721B2WCD2EPA Module I/O	
Size	Document Number: 630-90678-01	Rev: 1.0
Date: Monday, July 15, 2019	Sheet 4 of 4	