REVISION HISTORY

Rev	DESCRIPTION	DATE
1.0	Initial Release	02/19/19
2.0	1) Added J19 and removed R10 2) Updated J17 to T shaped jumper 3) Removed MFB button and change the color of the buttons. 4) Added support for 3.3V VDDIO voltage 5) Added digital speaker output support	08/09/19

CONTENTS

PAGE	DESCRIPTION
01	Cover Page
02	Block Diagram
03	CS47L35 CODEC
04	MICs & Audio Connectors
05	Shield Headers & Buttons
06	Power
07	USB

Drawing Numbers	
PCBA	121-90666-01
PCB	600-90666-01
FAB DRW	610-90666-01
ASSY DRW	620-90666-01
SCH DRW	630-90666-01

CYPRESS SEMICONDUCTOR
198 CHAMPION COURT
SAN JOSE, CA 95134
(408) 943-2600

CYPRESS SEMICONDUCTOR ?2017

SCH Title : CYW9BTAUDIO2 - Cover Page

Page Title : Title & Table of Contents

Size	Document Number	Drawn By	Approved By	Rev
B	630-90666-01	CLEU	CLEU	2.0

Date: Saturday, August 10, 2019 Sheet 1 of 7

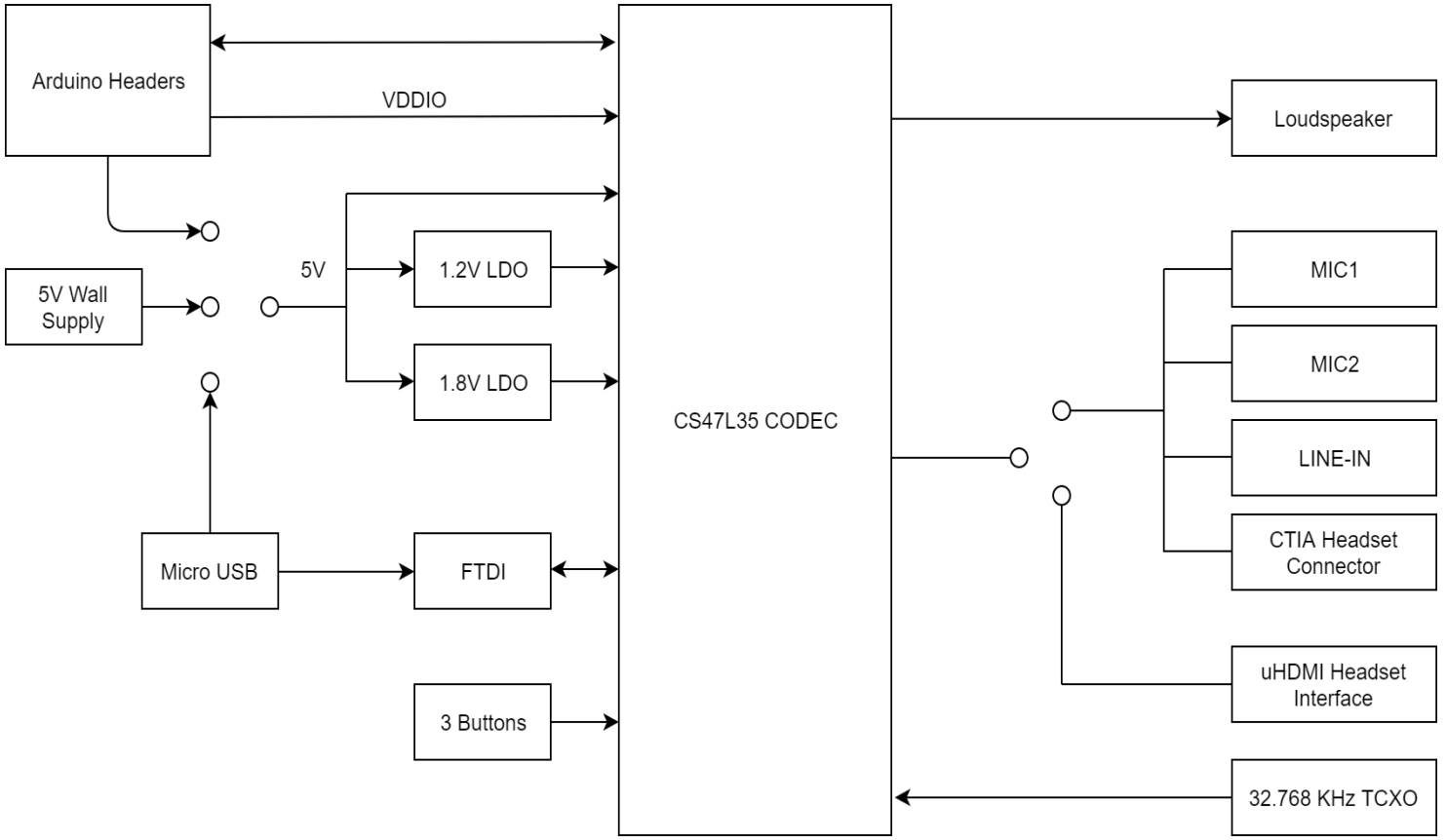

CYPRESS SEMICONDUCTOR
198 CHAMPION COURT
SAN JOSE, CA 95134
(408) 943-2600

CYPRESS SEMICONDUCTOR ?2017

SCH Title :	CYW9BTAUDIO2 - Block Diagram
Page Title :	Title & Table of Contents

Size	Document Number	Drawn By	Approved By	Rev
B	630-90666-01	CLEU	CLEU	2.0

Date: Tuesday, August 13, 2019 Sheet 2 of 7

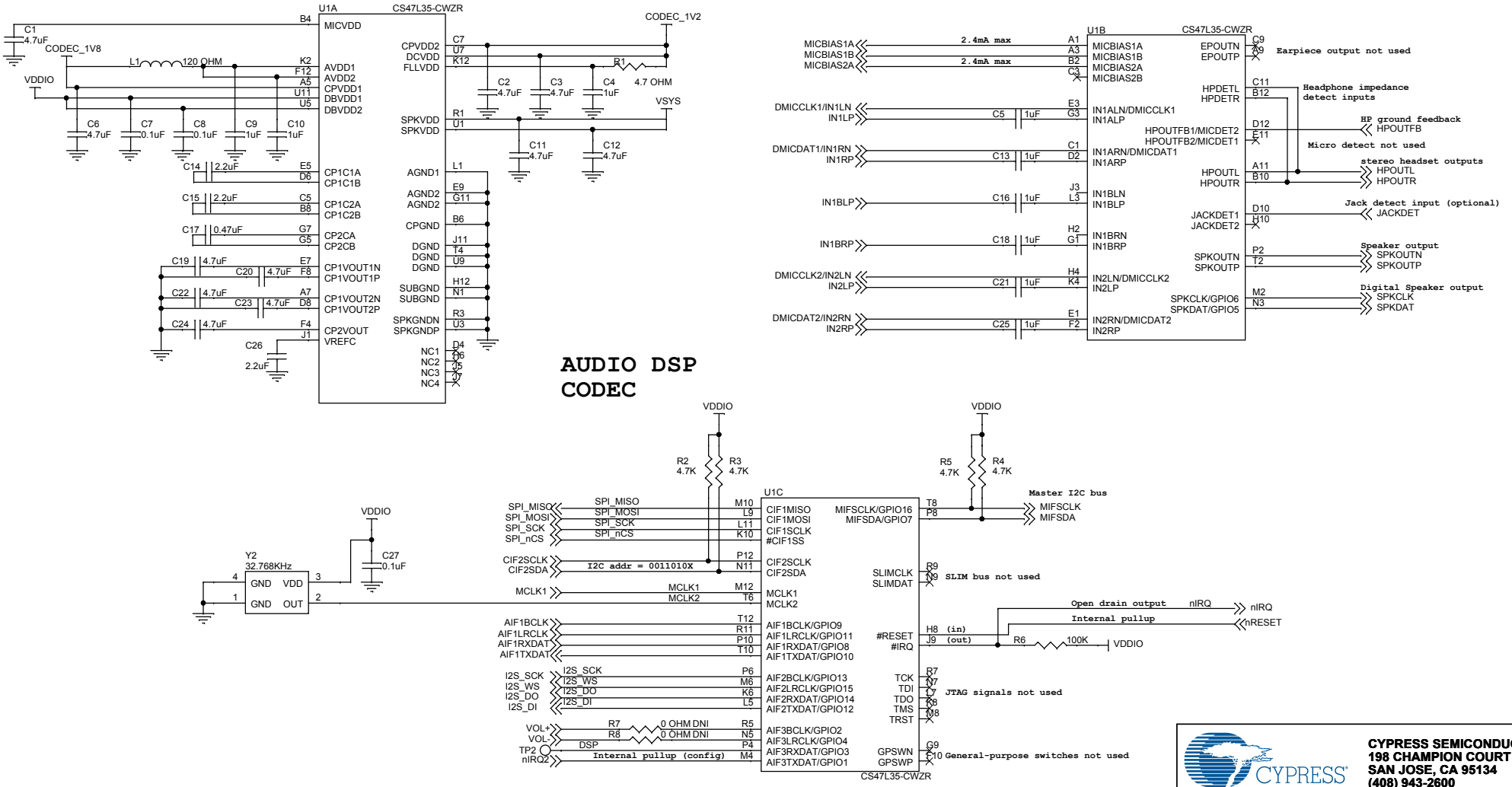

CYPRESS SEMICONDUCTOR
198 CHAMPION COURT
SAN JOSE, CA 95134
(408) 943-2600

CYPRESS SEMICONDUCTOR ?2017

SCH Title : CYW9BTAUDIO2 - CS47L35 CODEC				
Page Title : Title & Table of Contents				
Size: B	Document Number: 630-90666-01	Drawn By: CLEU	Approved By: CLEU	Rev: 2.0
Date: Saturday, August 10, 2019		Sheet 3 of 7		

Speaker output

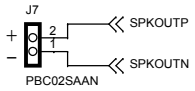

Digital Speaker output

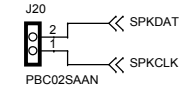

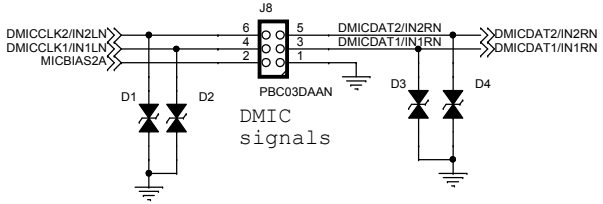

DMIC signals

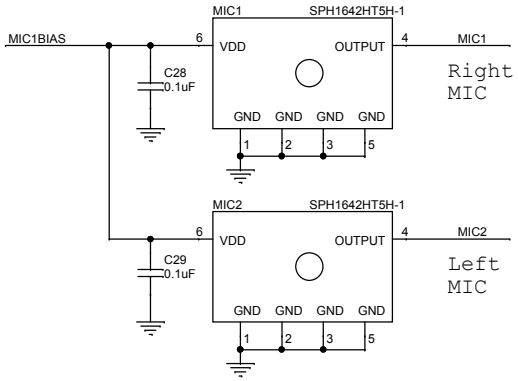

CTIA Headset Connector

Default component population supports 3 pole headphone. Install jumper on J19 to support CTIA 4 pole Headset
NOTE: Headset component population will result in J5 not being supported.

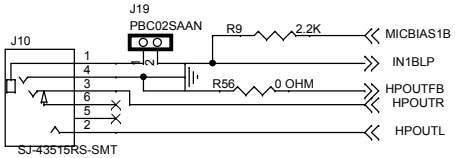

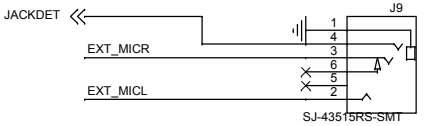

LINE-IN inputs

uHDMI HEADSET INTERFACE

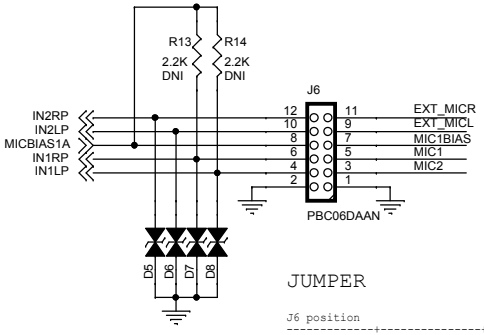

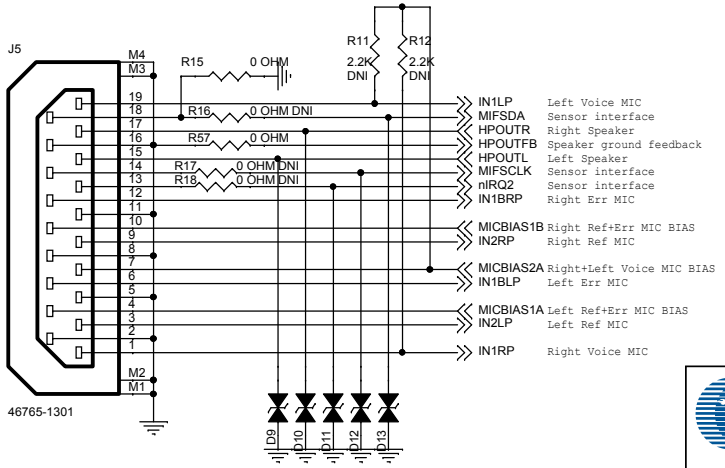

JUMPER

J6 position		
Short 7-8 Short 5-6 Short 3-4	microphones selected (MIC1 + MIC2)	Do not connect the uHDMI headset
Short 11-12 Short 9-10	Line-in selected (J9 jack)	Do not connect the uHDMI headset
Open ALL	Line-in and microphones not selected	uHDMI Headset microphones selected

ZJ6-3-4
SNT-100-BK-G

ZJ6-5-6
SNT-100-BK-G

ZJ6-7-8
SNT-100-BK-G

CYPRESS SEMICONDUCTOR
198 CHAMPION COURT
SAN JOSE, CA 95134
(408) 943-2600

CYPRESS SEMICONDUCTOR ?2017

SCH Title : CYW9BTAUDIO2 - MICs & Audio connectors

Page Title : Title & Table of Contents

Size	Document Number	Drawn By	Approved By	Rev
B	630-90666-01	CLEU	CLEU	2.0

Date: Saturday, August 10, 2019 Sheet 4 of 7

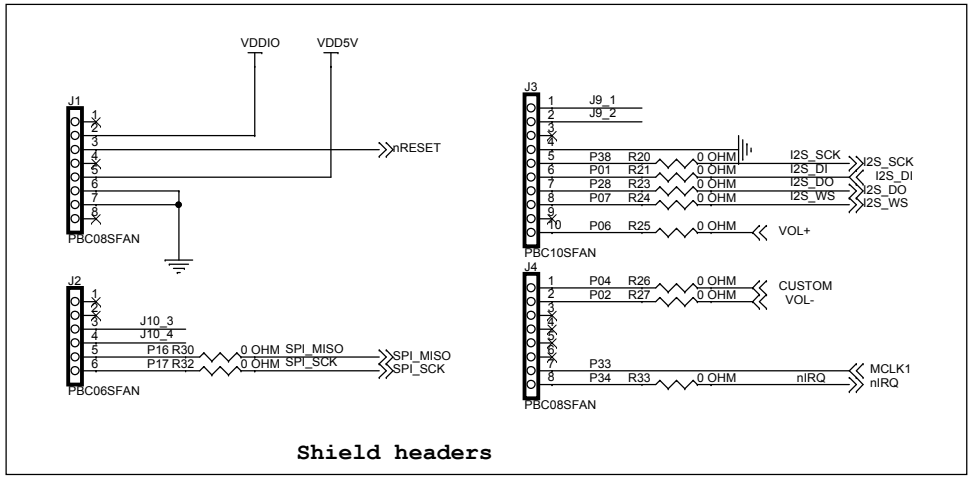

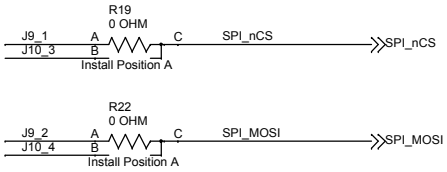

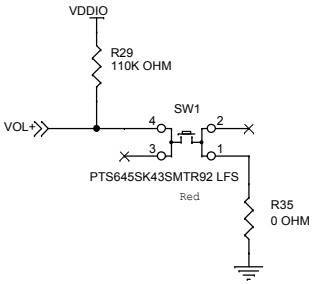

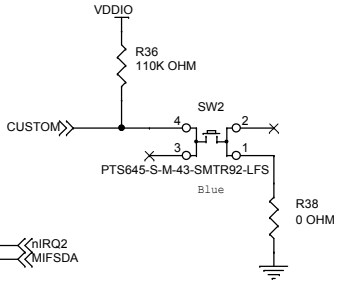

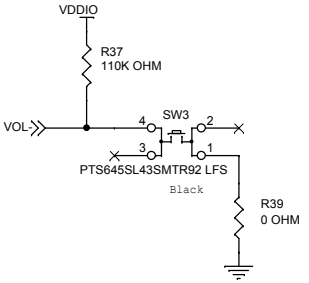

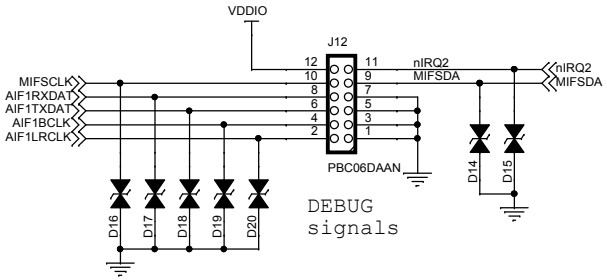

CYPRESS SEMICONDUCTOR
198 CHAMPION COURT
SAN JOSE, CA 95134
(408) 943-2600

CYPRESS SEMICONDUCTOR ?2017

SCH Title : CYW9BTAUDIO2 - Shield Headers & Buttons				
Page Title : Title & Table of Contents				
Size	Document Number	Drawn By	Approved By	Rev
B	630-90666-01	CLEU	CLEU	2.0
Date: Tuesday, August 13, 2019		Sheet 5 of 7		

POWER SOURCE

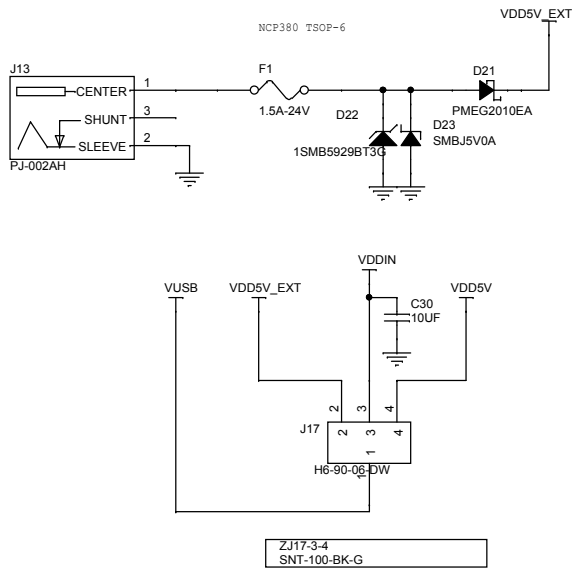

VOLTAGE REGULATORS

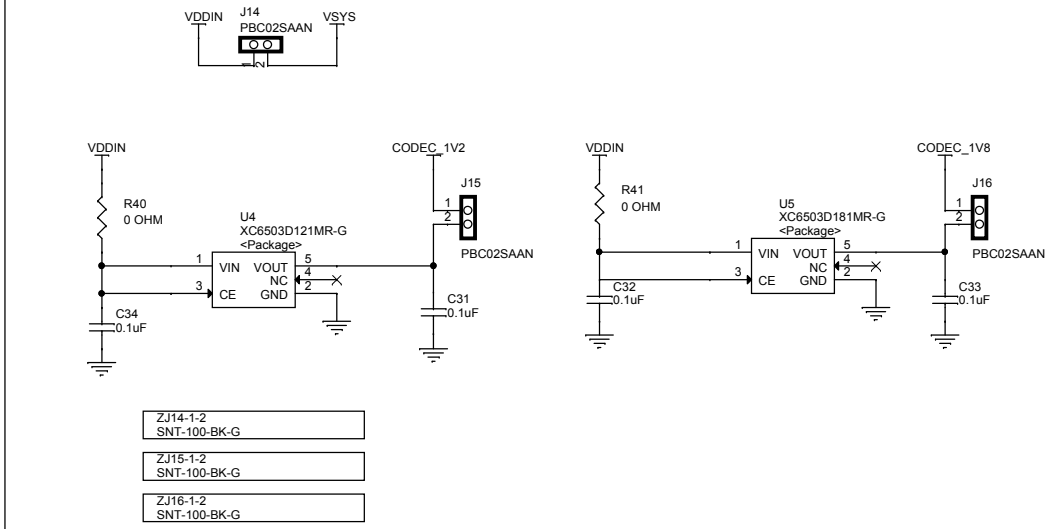

CYPRESS SEMICONDUCTOR
198 CHAMPION COURT
SAN JOSE, CA 95134
(408) 943-2600

CYPRESS SEMICONDUCTOR ?2017				
SCH Title : CYW9BTAUDIO2 - Power				
Page Title : Title & Table of Contents				
Size: B	Document Number: 630-90666-01	Drawn By: CLEU	Approved By: CLEU	Rev: 2.0
Date: Thursday, August 01, 2019		Sheet 6 of 7		

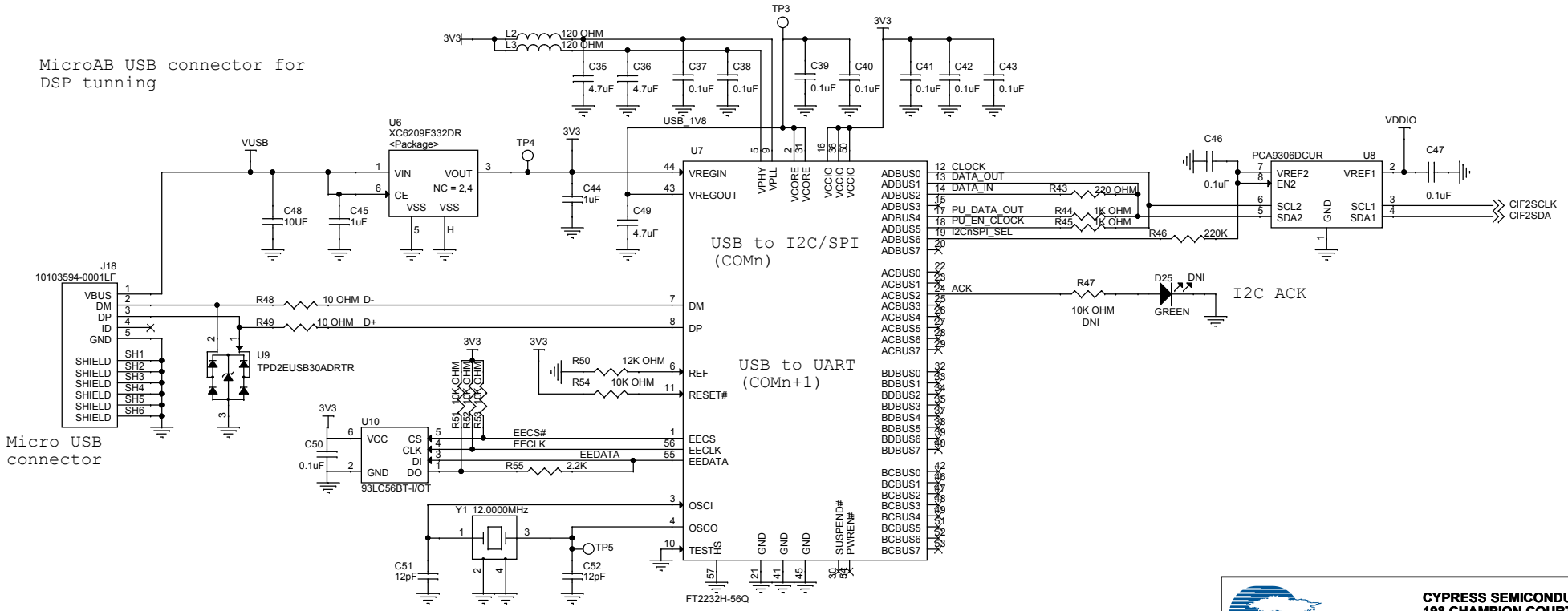

CYPRESS SEMICONDUCTOR	
198 CHAMPION COURT	
SAN JOSE, CA 95134	
(408) 943-2600	
CYPRESS SEMICONDUCTOR ?2017	
SCH Title :	**CYW9BTAUDIO2 - Shield Headers**
Page Title :	**Title & Table of Contents**
Size B / **Document Number** 630-90666-01 / **Drawn By** CLEU / **Approved By** CLEU / **Rev** 2.0	
Date: Thursday, August 01, 2019	**Sheet** 7 of 7