Revision History:

Rev 1.0, (07/10/18)

1) Initial Release

Rev 2.0, (10/16/18)

1) Updated block diagram
2) C12 and C15 changed to 1000pF
3) Removed TP12, TP13, TP14 and TP17
4) Removed CBL1 from the schematic
5) Other schematic cosmetic clean-ups

Rev 2.1, (12/13/18)

1) Updated the entire schematic to Cypress library components

Rev 2.2, (1/4/19)

1) Schematic text changes

Rev 2.3, (1/28/19)

1) DNI analog MIC and all of it's passive components

Rev 2.4, (3/15/19)

1) DNI real time clock and all of it's passive components

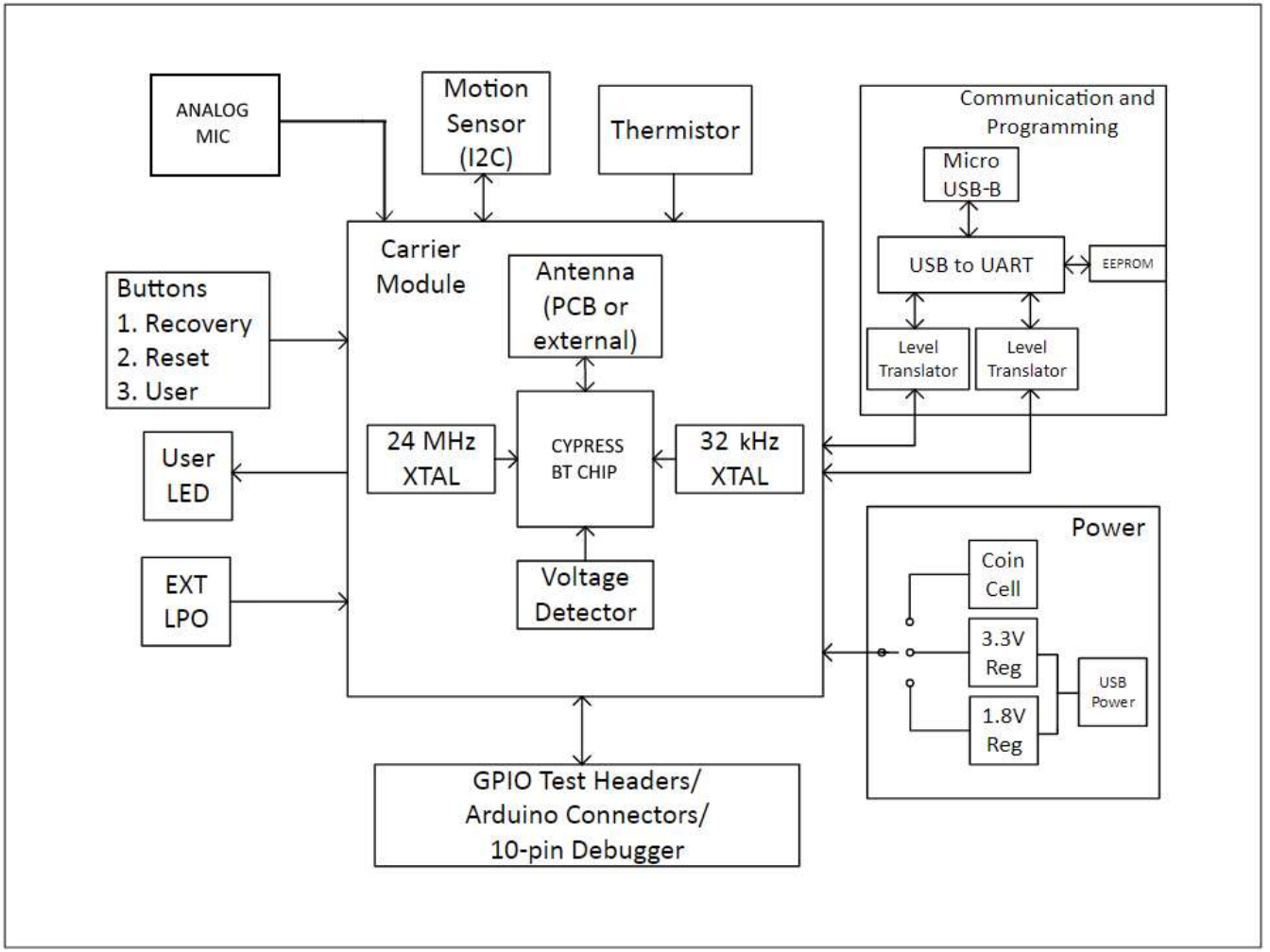

PAGE1: COVER PAGE
PAGE2: CARRIER MODULE
PAGE3: PERIPHERALS & SENSORS
PAGE4: POWER
PAGE5: USB TO UART INTERFACE

Title	CYW9BTWCDEVAL4 - Cover Page	
Size	Document Number: 630-90624-01	Rev: 2.4
Date: Friday, March 15, 2019	Sheet 1 of 5	

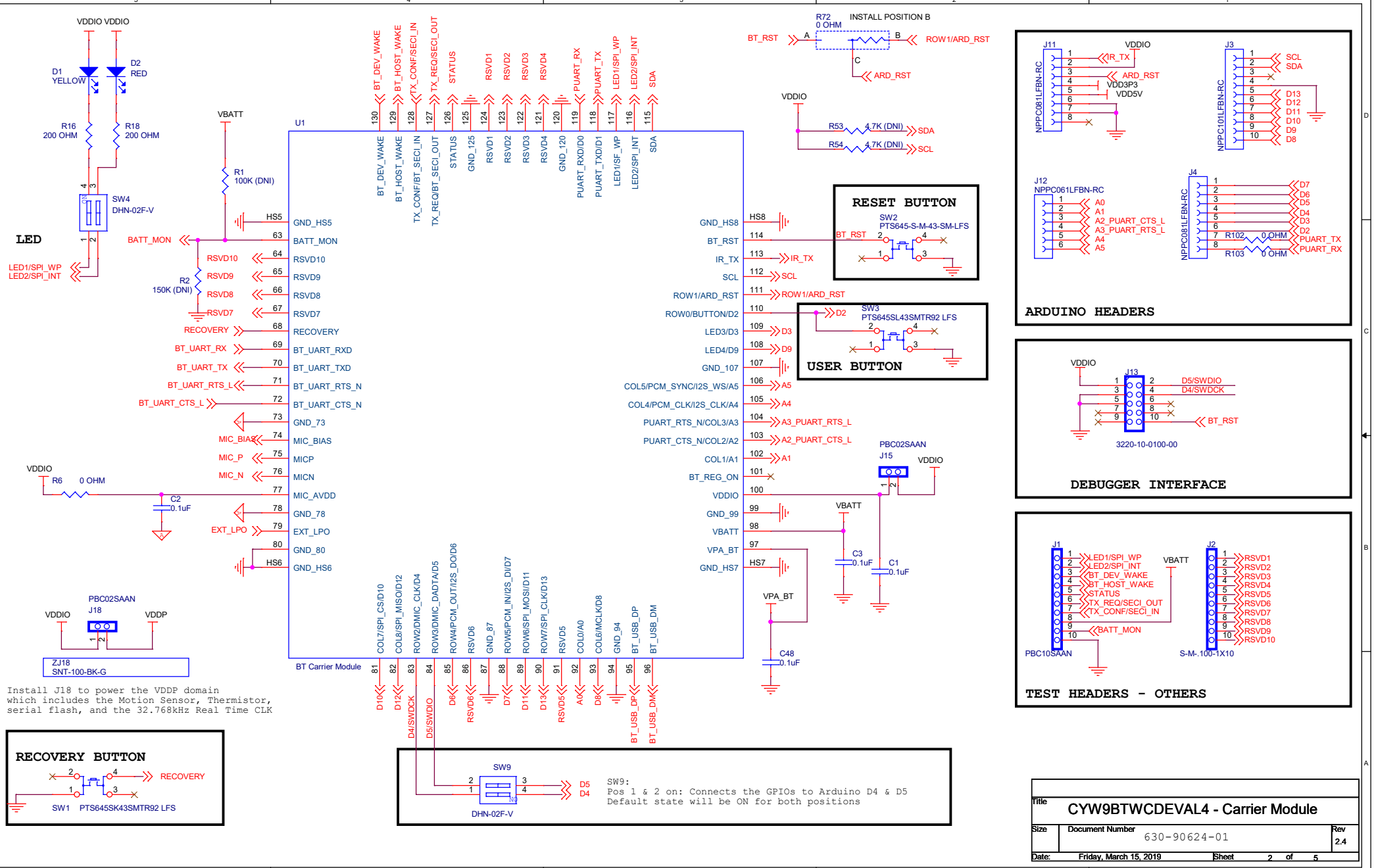

Title	CYW9BTWCDEVAL4 - Carrier Module
Size	Document Number: 630-90624-01
Rev	2.4
Date:	Friday, March 15, 2019
Sheet	2 of 5

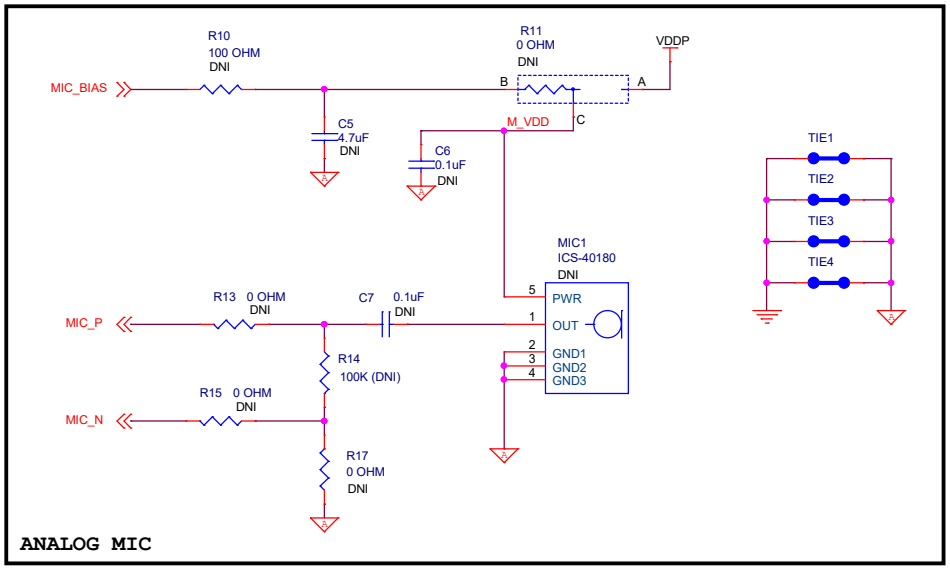

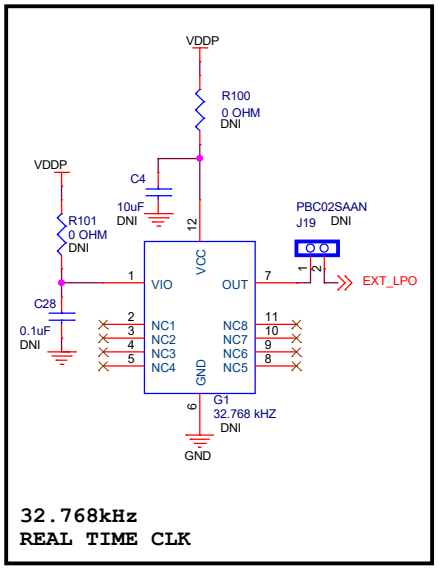

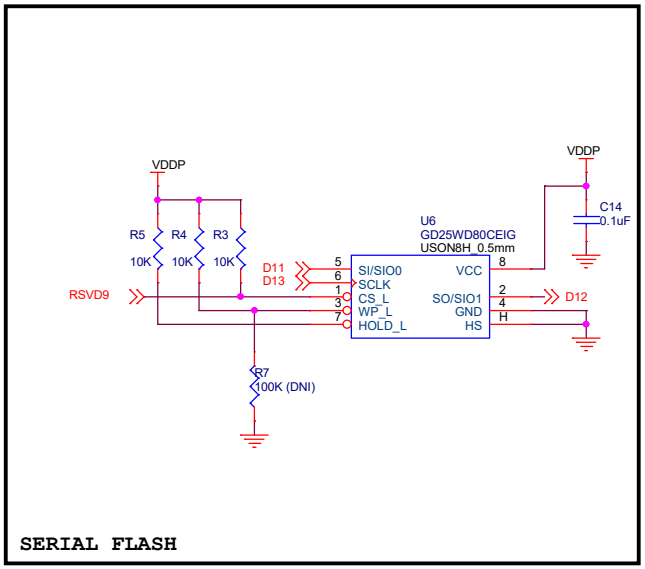

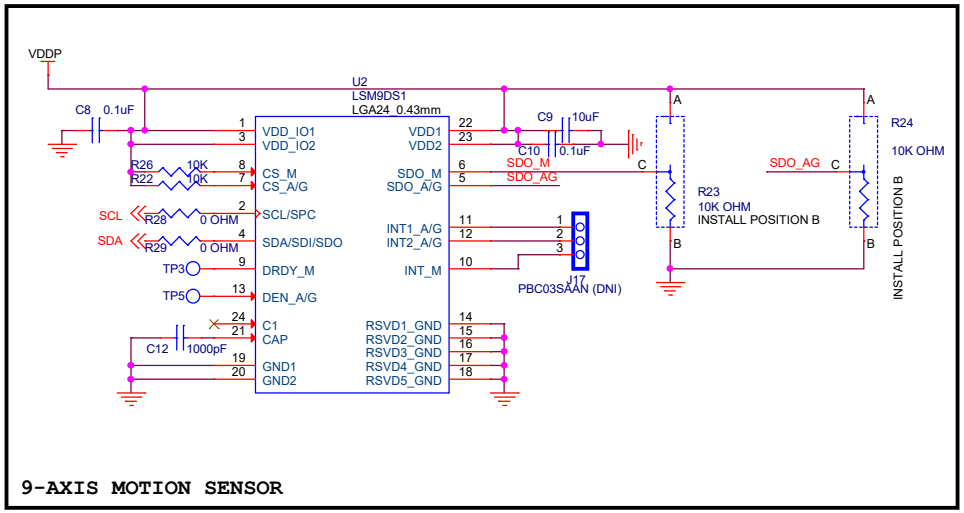

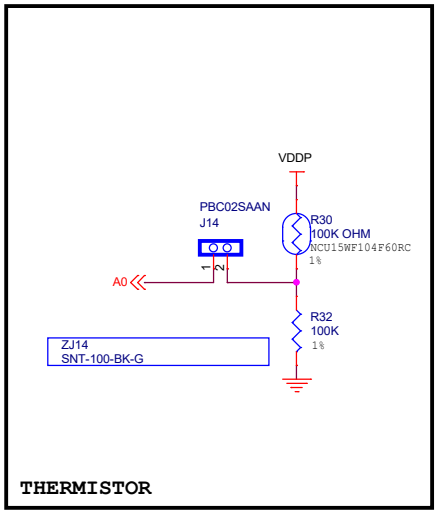

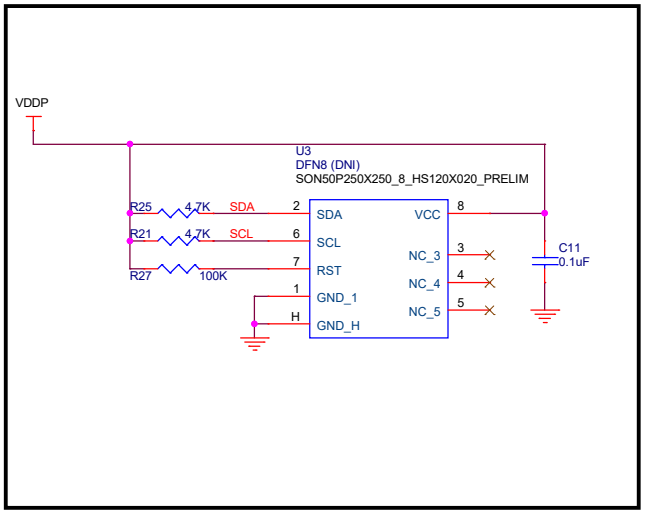

Title	CYW9BTWCDEVAL4 - Peripherals and Sensors	
Size	Document Number: 630-90624-01	Rev: 2.4
Date: Friday, March 15, 2019	Sheet 3 of 5	

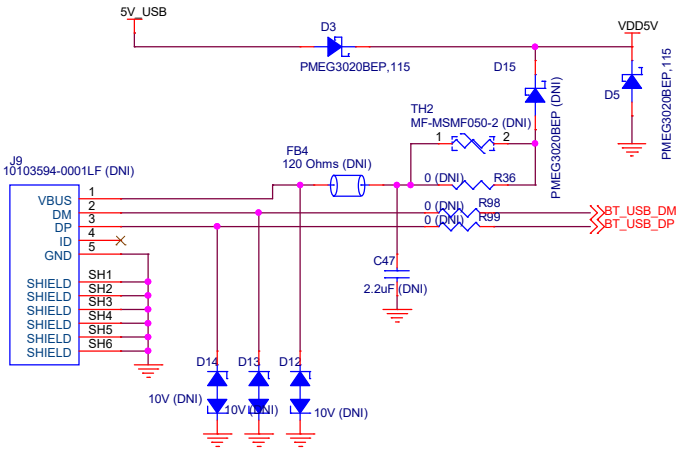

BT USB CONNECTOR

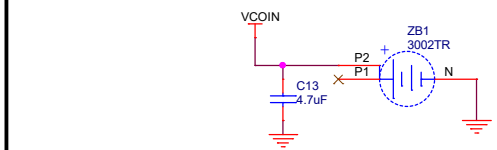

CR2032 Coin Cell

Add solder paste for GND pin of coin cell holder.

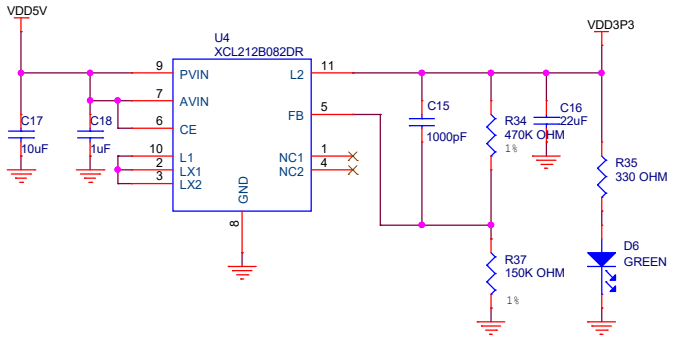

3.3V SUPPLY

VDDIO Supply Options:
Short J7 Pos 2-4: Power VDDIO from VDD3P3
Short J7 Pos 4-6: Power VDDIO from VDD1P8
Short J7 Pos 3-4: Power VDDIO from Coin Cell

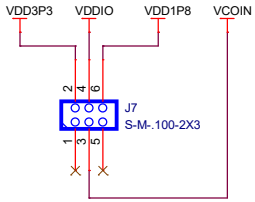

VBAT Supply Options:
Short J8 Pos 2-4: Power VBATT from VDD3P3
Short J8 Pos 4-6: Power VBATT from VDD1P8
Short J8 Pos 3-4: Power VBATT from Coin Cell

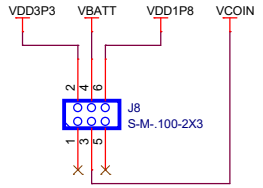

Rubber Feet Stand-offs

MT1	SJ61A4
MT2	SJ61A4
MT3	SJ61A4
MT4	SJ61A4

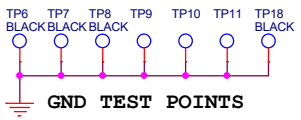

GND TEST POINTS

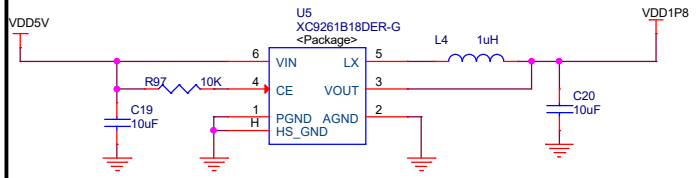

1.8V SUPPLY

VPA_BT Supply Options:
Short J16 Pos 2-4: Power VPA_BT from VDD3P3
Short J16 Pos 4-6: Power VPA_BT from VDD1P8
Short J16 Pos 3-4: Power VPA_BT from Coin Cell
See kit user guide for list of supported operation modes.

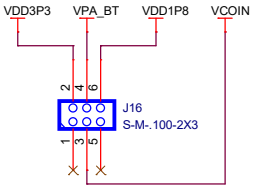

Title	CYW9BTWCDEVAL4 - Power	
Size	Document Number: 630-90624-01	Rev: 2.4
Date: Friday, March 15, 2019	Sheet 4 of 5	

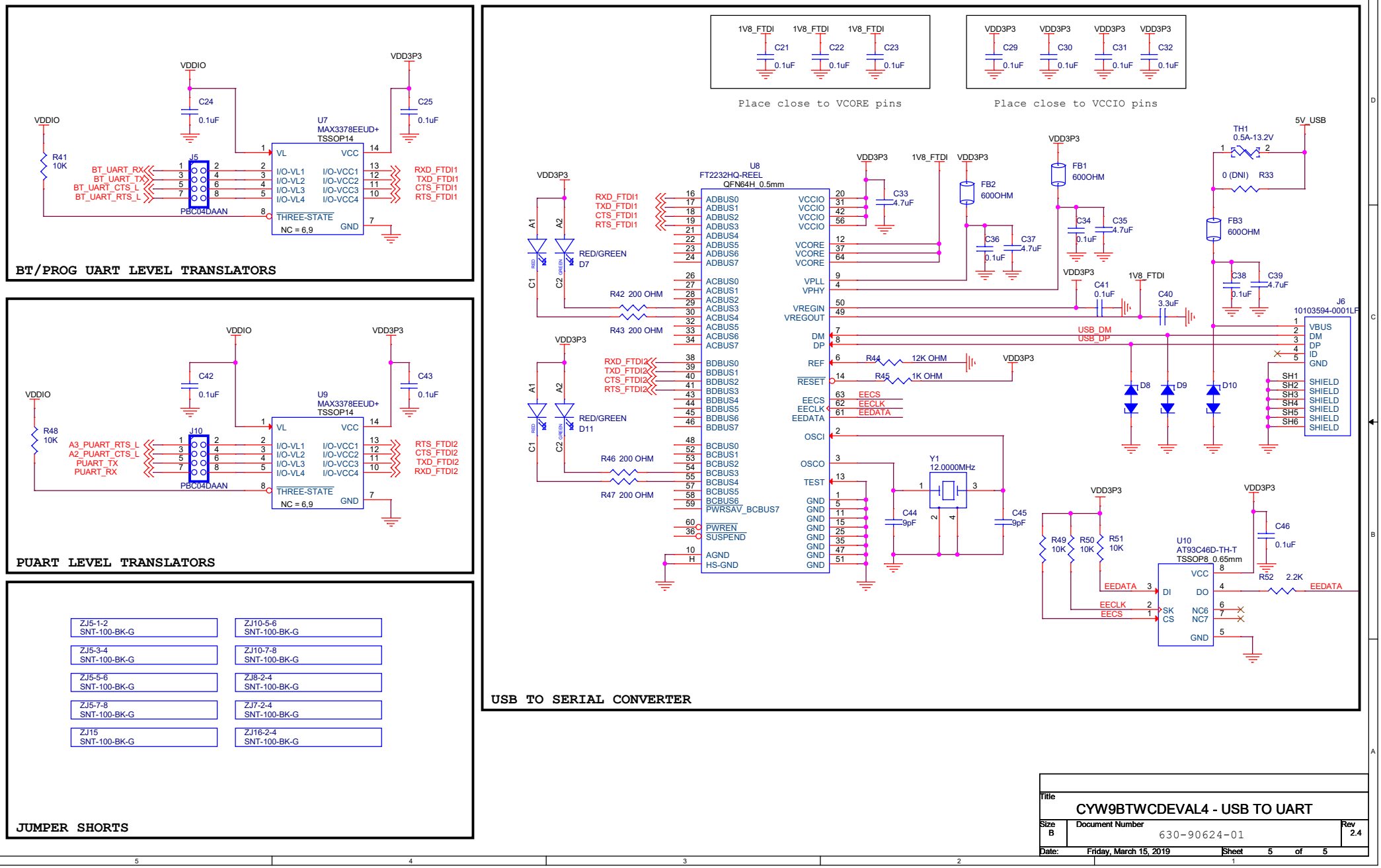

Title	CYW9BTWCDEVAL4 - USB TO UART	
Size B	Document Number 630-90624-01	Rev 2.4
Date: Friday, March 15, 2019	Sheet 5 of 5	