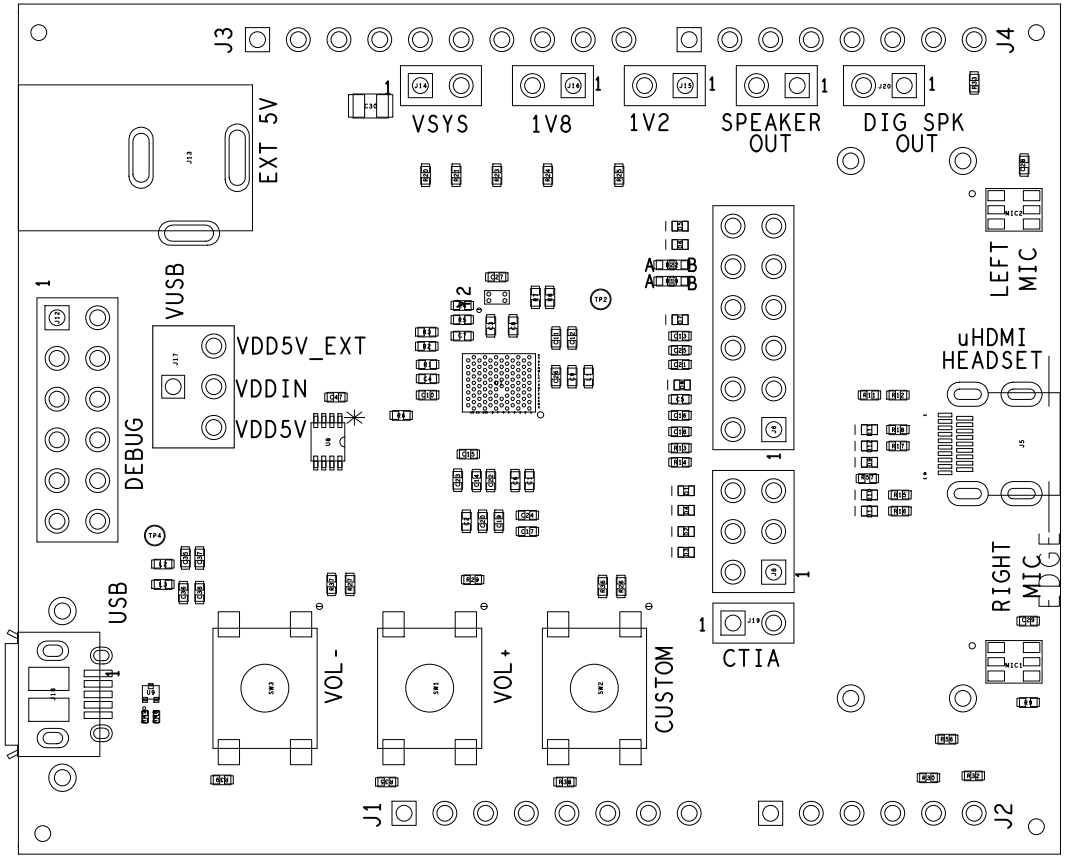

CYPRESS
EMBEDDED IN TOMORROW™
SAN JOSE, CA

THE INFORMATION HEREIN IS PROPRIETARY TO CYPRESS

PROJECT:	CYW9BTAUDIO2		
DRAWN BY:	YJUN		
LAYER:	ASSEMBLY TOP		
DWG NO: 620-90666-01	REV: 2.0	DATE: 08/30/19	

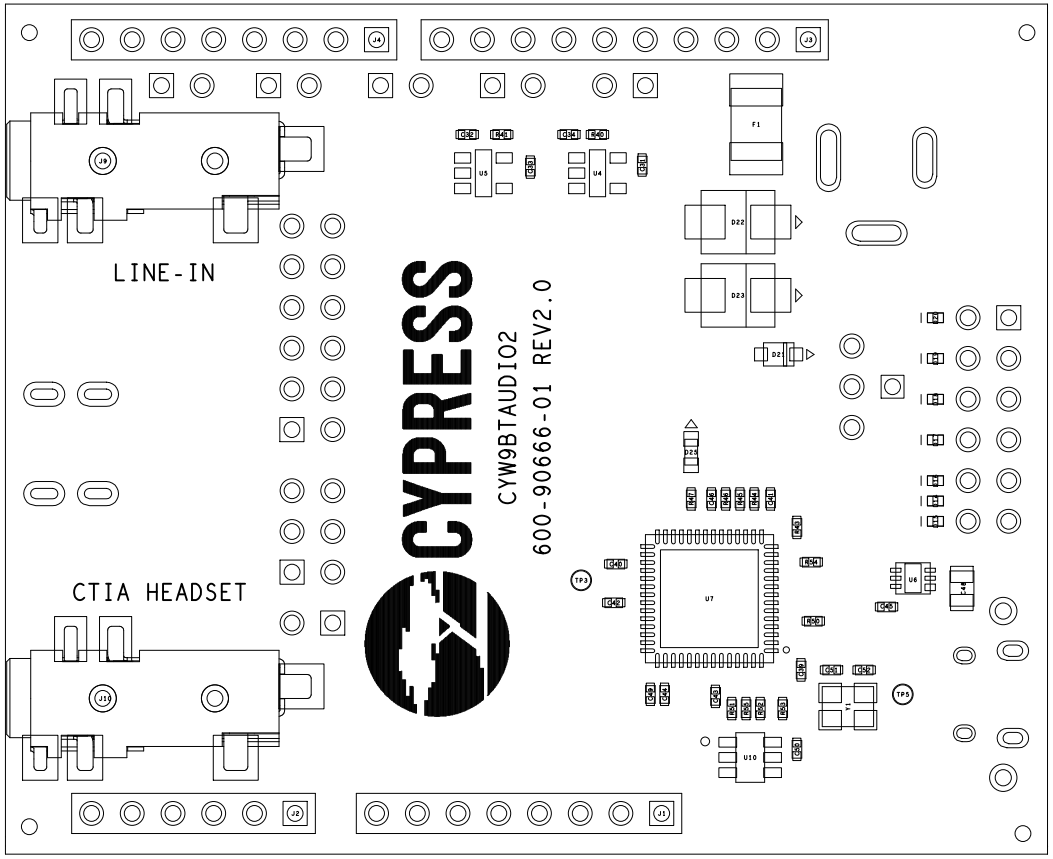

CYPRESS EMBEDDED IN TOMORROW™ SAN JOSE, CA	PROJECT: CYW9BTAUDIO2		
THE INFORMATION HEREIN IS PROPRIETARY TO CYPRESS	DRAWN BY: YJUN		
	LAYER: ASSEMBLY BOTTOM		
	DWG NO: 620-90666-01	REV: 2.0	DATE: 08/30/19