Schematic modified for
CYW9P62S1-43438EVB-01 PSoC 62S1 Wi-Fi BT Pioneer Kit

CYW9-BASE-01 Pioneer Baseboard

CONTENTS

PAGE	DESCRIPTION
01	Title Page
02	Functional Block Diagram
03	Power Supply Block Diagram
04	Power Supply (1)
05	Power Supply (2)
06	KitProg3 Controller
07	KitProg3 Power and Headers
08	Carrier Module Power
09	Carrier Module Signals
10	Peripherals
11	Expansion Headers & Memory
12	microSD card and Accessories
13	Revision History

Drawing Numbers	
PCBA	121-60567-01
PCB	600-60552-01
FAB DRW	610-60552-01
ASSY DRW	620-60552-01
SCH DRW	630-60552-01

CYPRESS SEMICONDUCTOR
198 CHAMPION COURT
SAN JOSE, CA 95134
(408) 943-2600

CYPRESS SEMICONDUCTOR © 2019

SCH Title : CYW9-BASE-01 Pioneer Baseboard

Page Title : Title Page

Size	Document Number	Drawn By	Approved By	Rev
A4	630-60552-01	TARE	RKAD	05

Date: Friday, September 20, 2019 Sheet 1 of 13

CYW9-BASE-01 Architecture Block Diagram

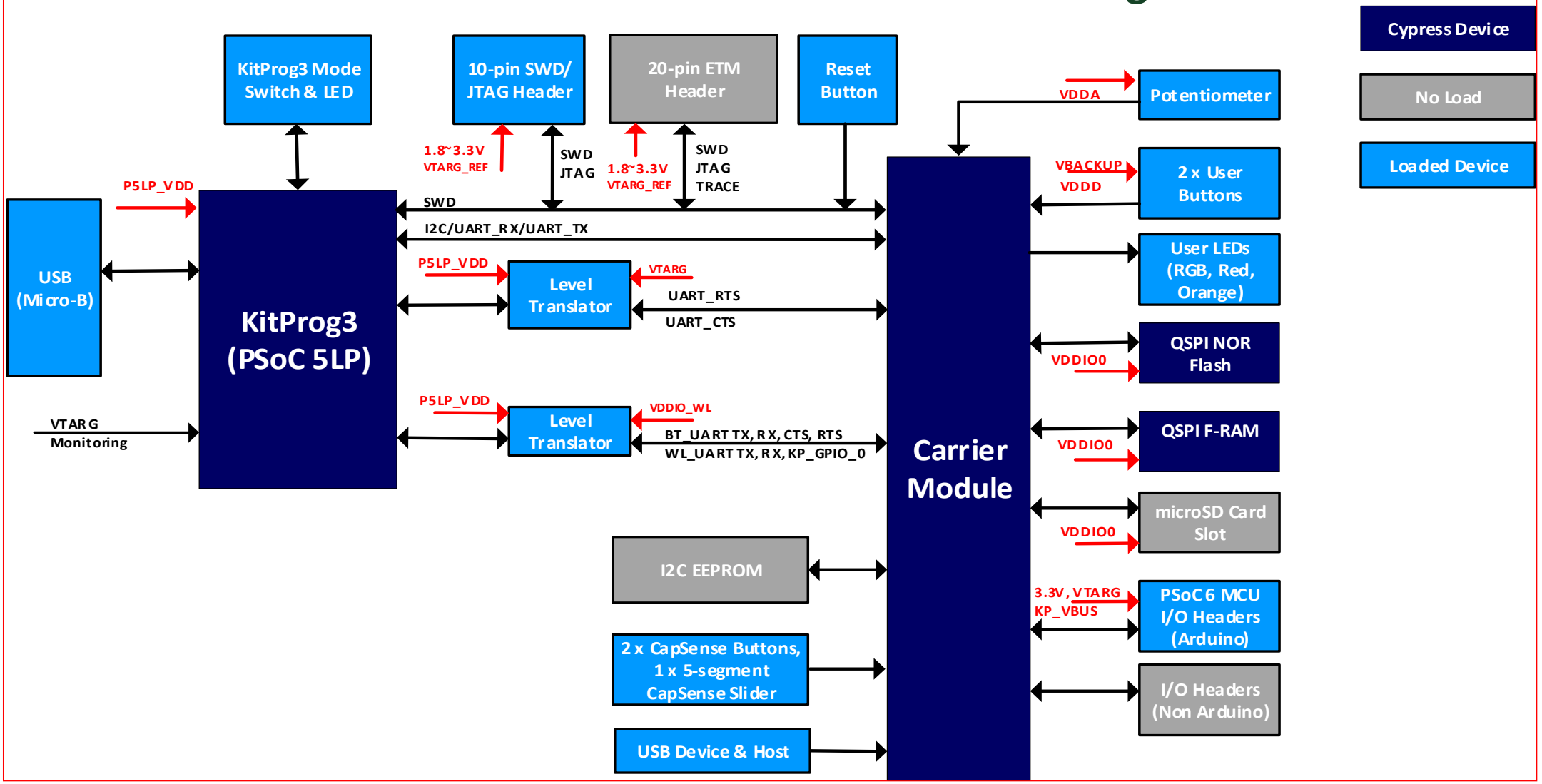

CYPRESS SEMICONDUCTOR
198 CHAMPION COURT
SAN JOSE, CA 95134
(408) 943-2600

CYPRESS SEMICONDUCTOR © 2019

SCH Title : CYW9-BASE-01 Pioneer Baseboard

Page Title : Functional Block Diagram

Size	Document Number	Drawn By	Approved By	Rev
A4	630-60552-01	TARE	RKAD	05

Date: Thursday, October 10, 2019 Sheet 2 of 13

Power Supply Section

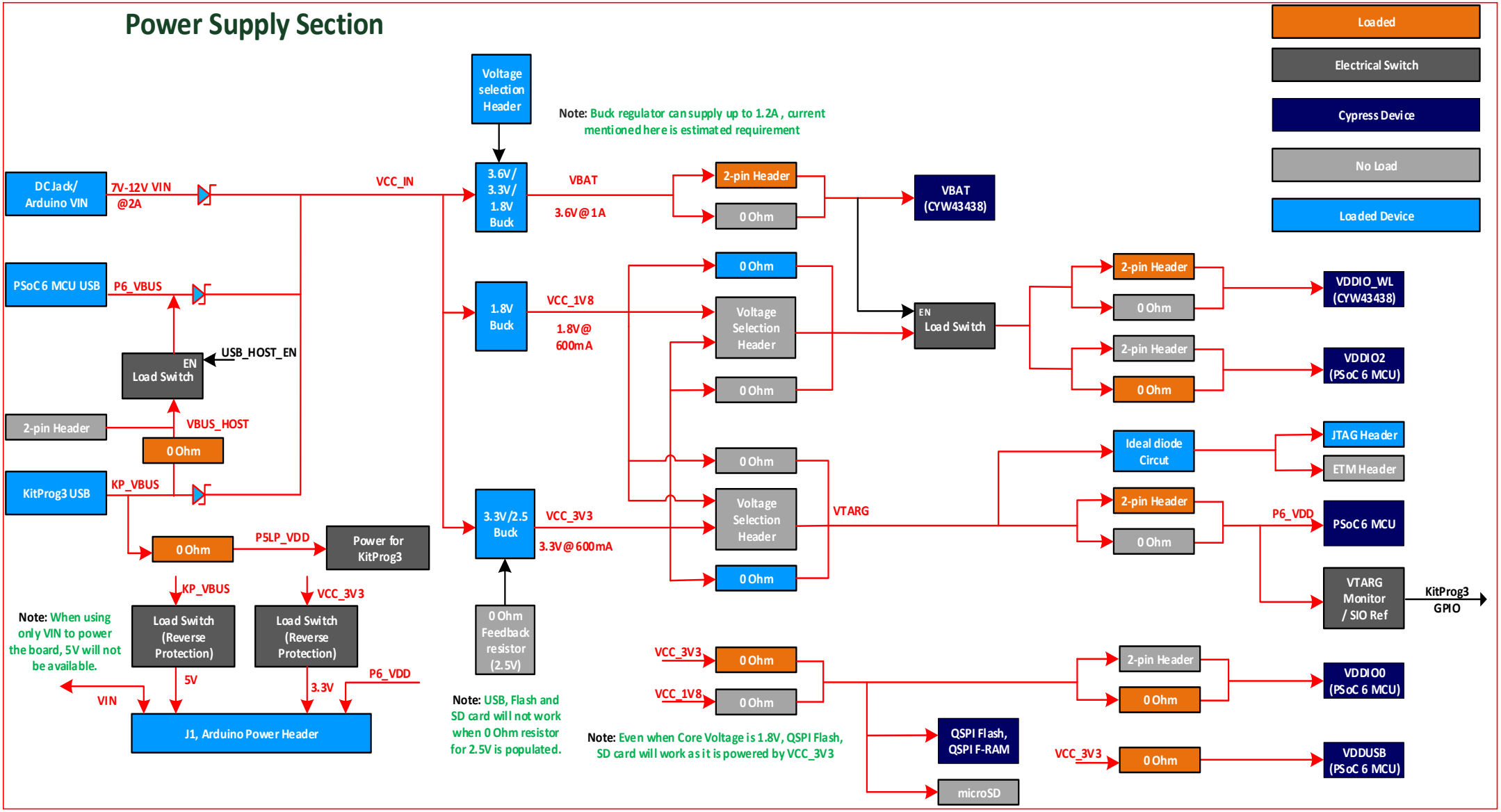

CYPRESS SEMICONDUCTOR
198 CHAMPION COURT
SAN JOSE, CA 95134
(408) 943-2600

CYPRESS SEMICONDUCTOR © 2019

SCH Title :	CYW9-BASE-01 Pioneer Baseboard
Page Title :	Power Supply Block Diagram

Size	Document Number	Drawn By	Approved By	Rev
A4	630-60552-01	TARE	RKAD	05

Date: Thursday, October 10, 2019 Sheet 3 of 13

VIN Header

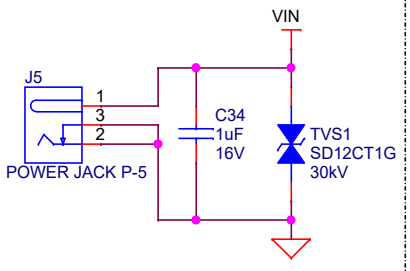

Power Supply 'OR'ing

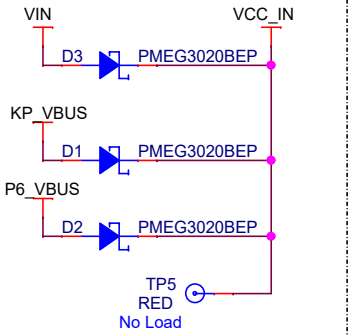

PSoC 6 MCU USB Host/Device Micro-B connector

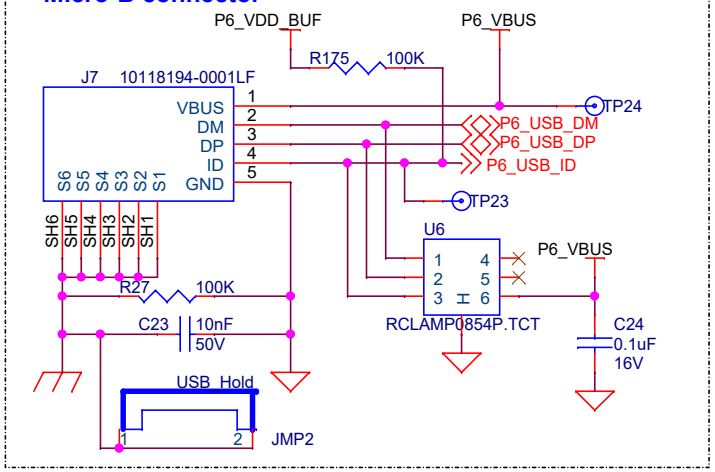

KitProg3 USB Micro-B connector

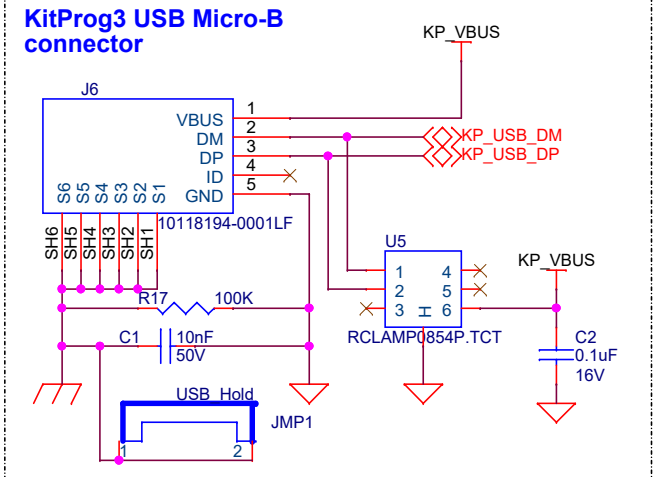

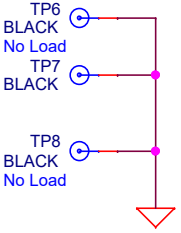

VBAT Voltage Regulator

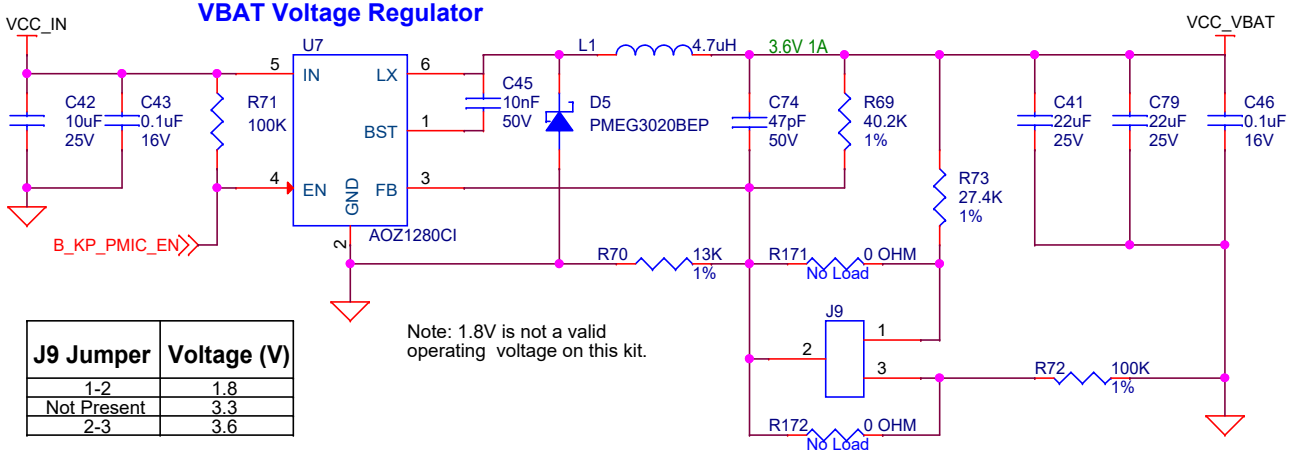

J9 Jumper	Voltage (V)
1-2	1.8
Not Present	3.3
2-3	3.6

Note: 1.8V is not a valid operating voltage on this kit.

Current Measurement

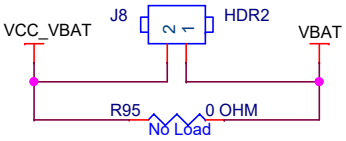

CYPRESS SEMICONDUCTOR
198 CHAMPION COURT
SAN JOSE, CA 95134
(408) 943-2600

CYPRESS SEMICONDUCTOR © 2019

SCH Title : CYW9-BASE-01 Pioneer Baseboard

Page Title : Power Supply (1)

Size	Document Number	Drawn By	Approved By	Rev
A4	630-60552-01	TARE	RKAD	05

Date: Wednesday, September 18, 2019 Sheet 4 of 13

3.3V Voltage Regulator

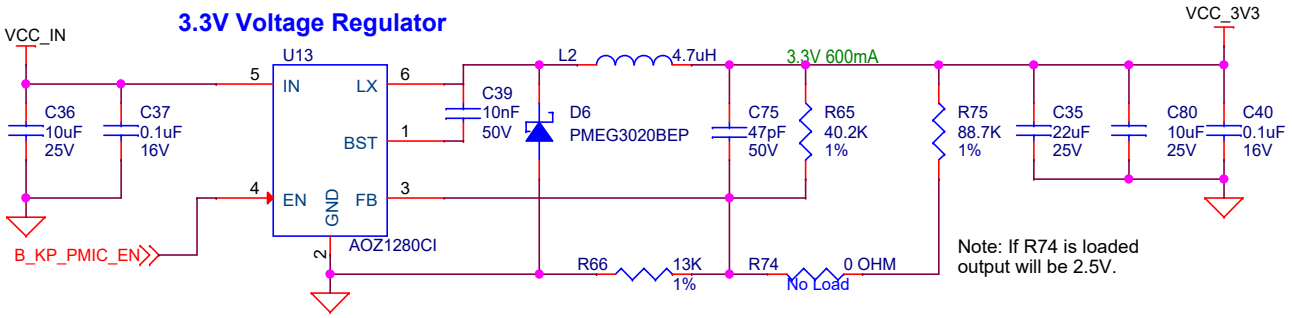

1.8V Voltage Regulator

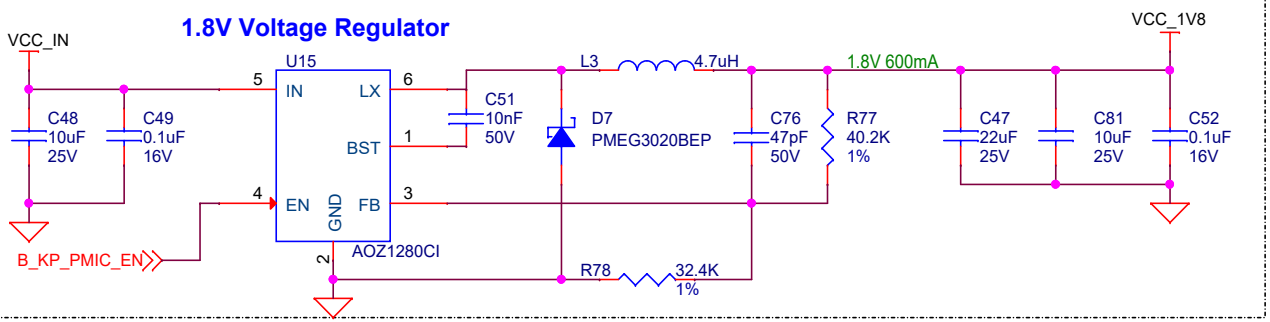

VTARG Voltage Selection Header

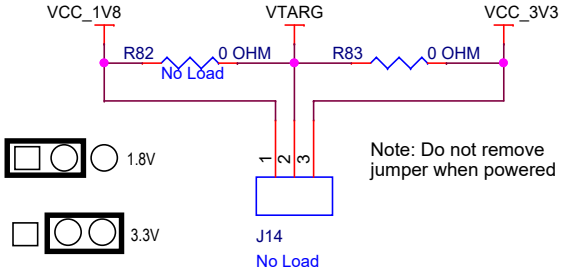

P6_VDD Current Measurement

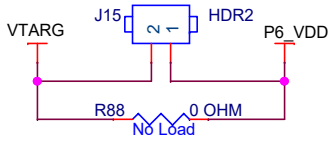

VCC_VDDIO2_IN Voltage Selection Header

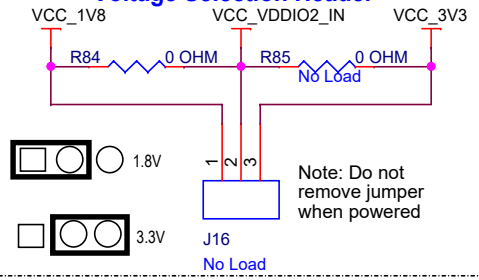

VCC_VDDIO2 Load Switch

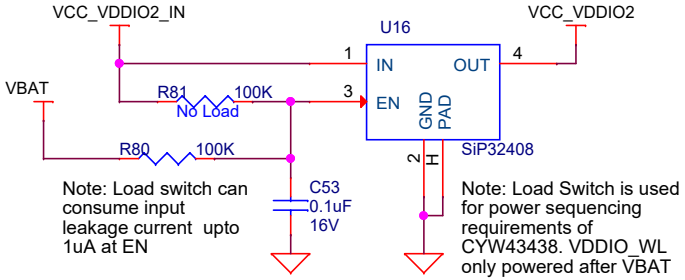

VDDIO_WL & VDDIO2 Current Measurement

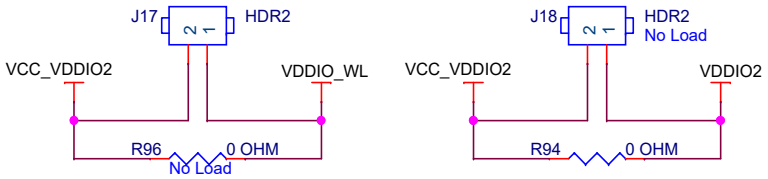

VDDIO0 Voltage Selection

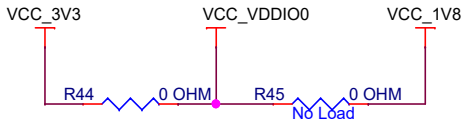

VDDIO0 Current Measurement

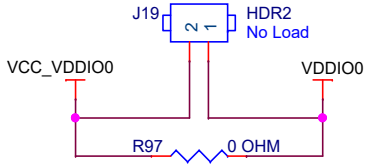

CYPRESS SEMICONDUCTOR
198 CHAMPION COURT
SAN JOSE, CA 95134
(408) 943-2600

CYPRESS SEMICONDUCTOR © 2019

SCH Title : CYW9-BASE-01 Pioneer Baseboard				
Page Title : Power Supply (2)				
Size: A4	Document Number: 630-60552-01	Drawn By: TARE	Approved By: RKAD	Rev: 05
Date: Thursday, September 19, 2019		Sheet 5 of 13		

PSoC 5LP based KitProg3

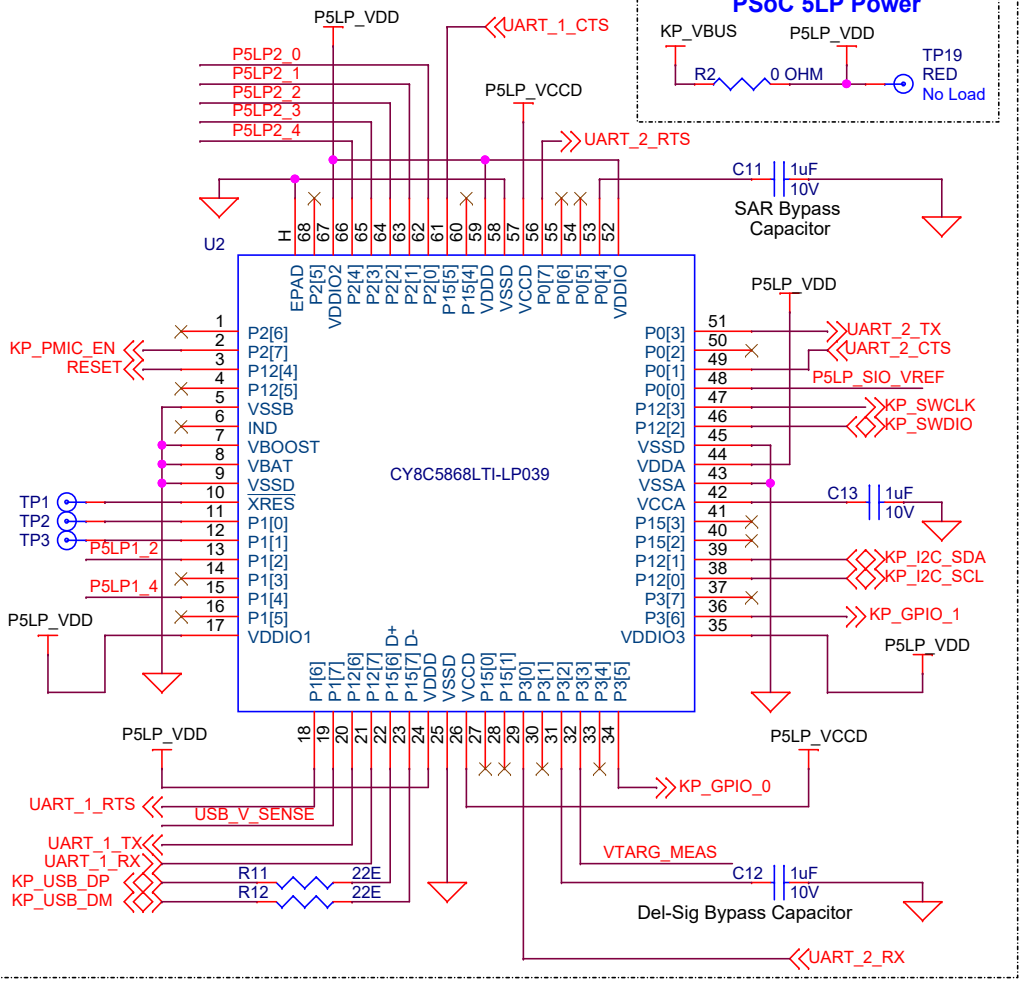

PSoC 5LP Power

Decoupling Capacitors

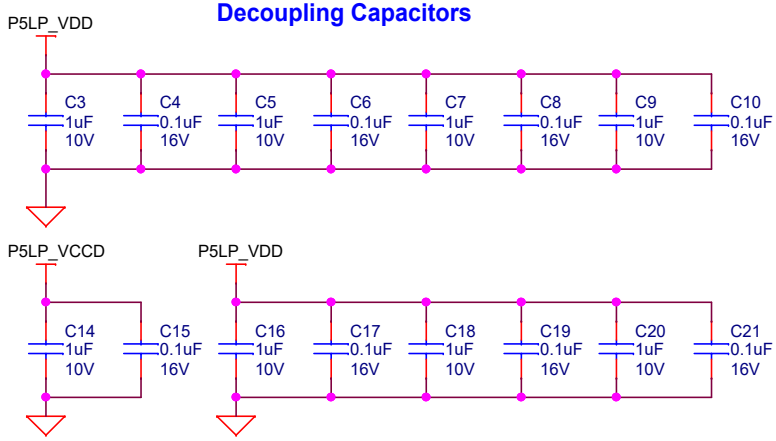

Voltage Monitoring

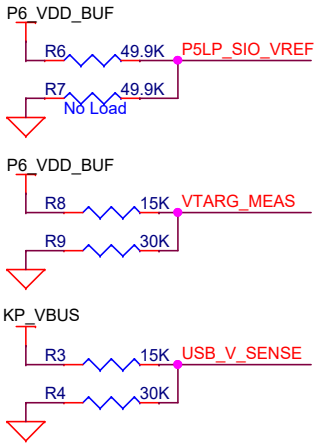

KitProg3 H/W Revision

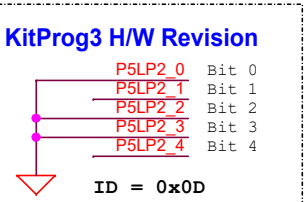

PMIC Enable Buffer

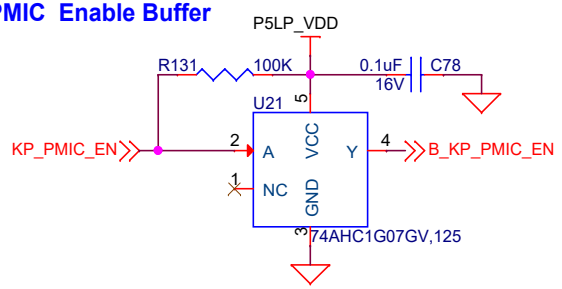

Primary UART H/W Flow Control Level Translator

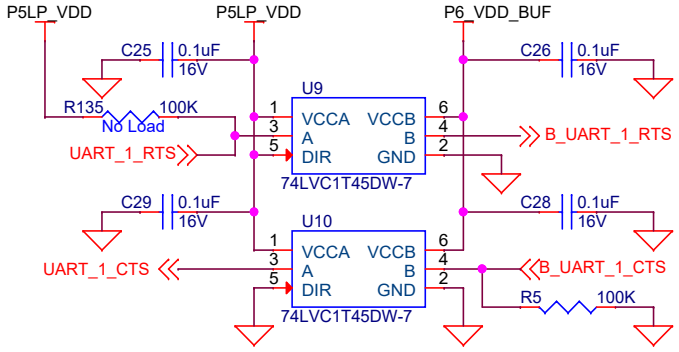

Mode Switch

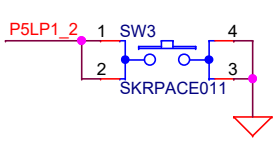

I2C Pull-ups

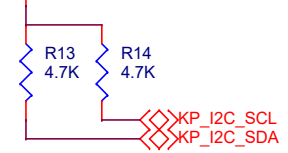

KitProg3 Status LED

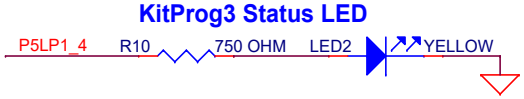

CYPRESS SEMICONDUCTOR
198 CHAMPION COURT
SAN JOSE, CA 95134
(408) 943-2600

CYPRESS SEMICONDUCTOR © 2019

SCH Title : CYW9-BASE-01 Pioneer Baseboard				
Page Title : KitProg3 Controller				
Size A4	Document Number 630-60552-01	Drawn By TARE	Approved By RKAD	Rev 05
Date: Wednesday, September 18, 2019		Sheet 6 of 13		

VTARG Reverse Voltage Protection

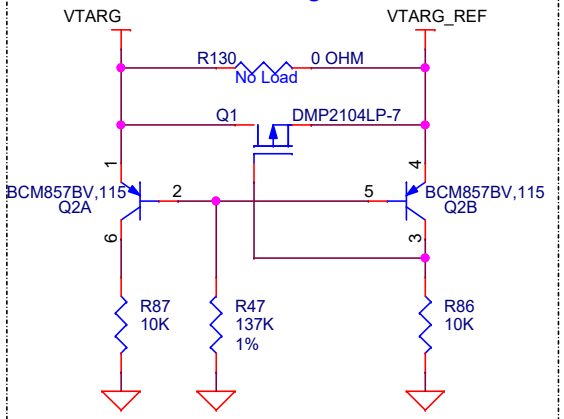

Note: VTARG_REF is only output voltage sense line for external debuggers. PSoC 6 can't be powered using external debugging headers J11 and J12

Note: If R130 is loaded and external power is used, make sure to remove jumper shunt from J14 to prevent reverse voltage to on-board regulator

MCU 10-pin SWD/JTAG Header

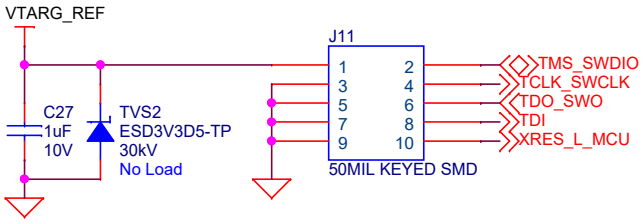

CYW43438 10-pin SWD/JTAG Header

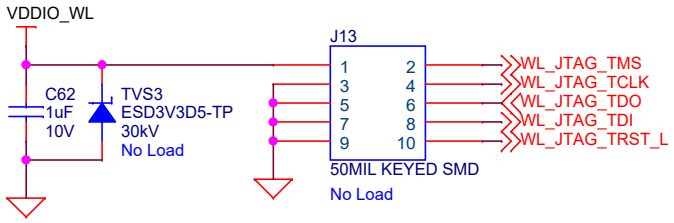

MCU 20-pin ETM Header

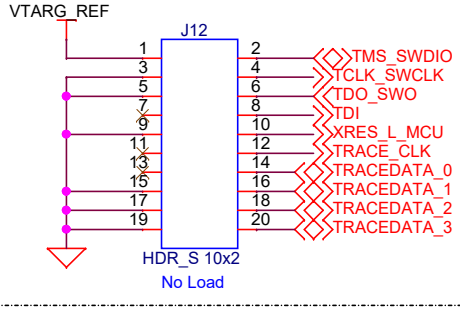

MCU JTAG Pull-ups

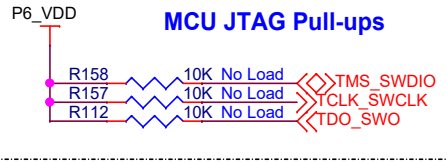

JTAG SEL Selection

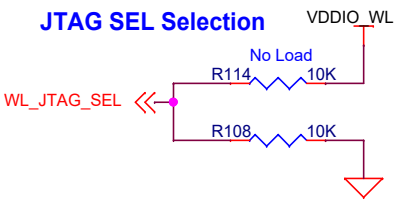

WL JTAG Pull-ups

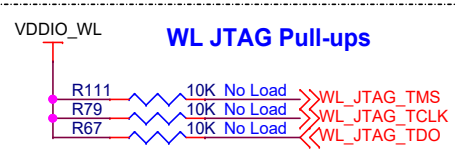

MCU SWD KitProg3 Interface

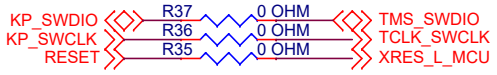

KitProg3 I2C Interface

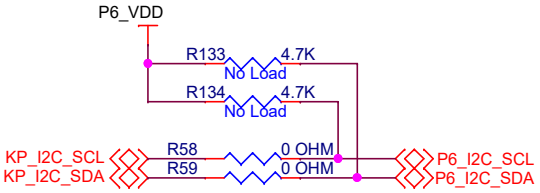

KitProg3 UART Interface

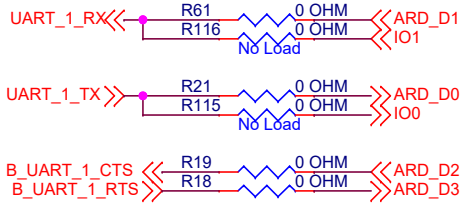

KitProg3 Level Translator for Secondary UART and GPIO

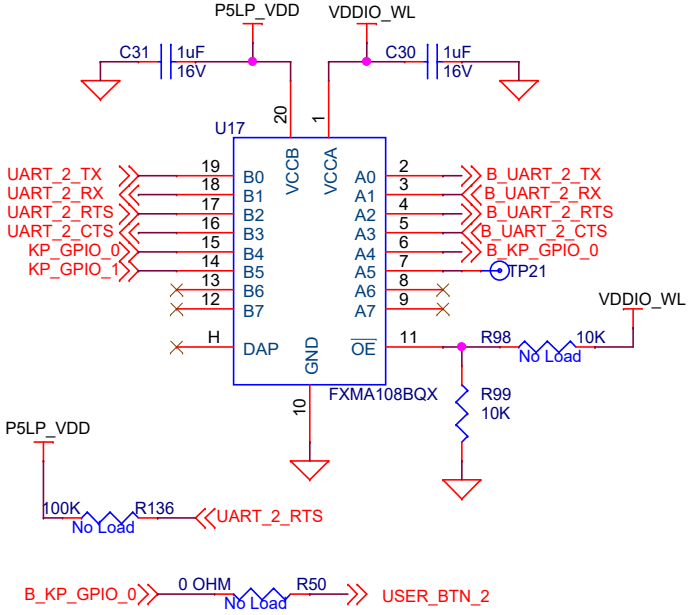

KitProg3 Secondary UART Multiplexing

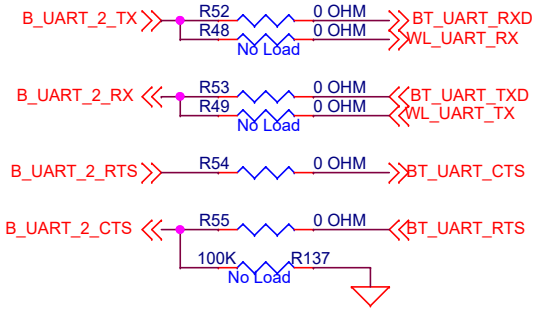

CYPRESS SEMICONDUCTOR
198 CHAMPION COURT
SAN JOSE, CA 95134
(408) 943-2600

CYPRESS SEMICONDUCTOR © 2019

SCH Title : CYW9-BASE-01 Pioneer Baseboard

Page Title : KitProg3 Power and Headers

Size	Document Number	Drawn By	Approved By	Rev
A4	630-60552-01	TARE	RKAD	05

Date: Thursday, September 19, 2019 Sheet 7 of 13

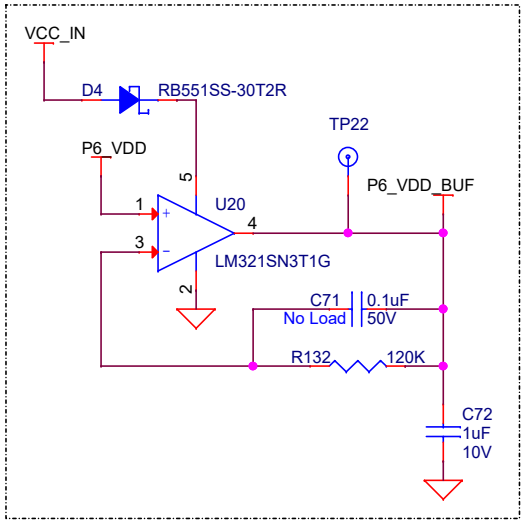

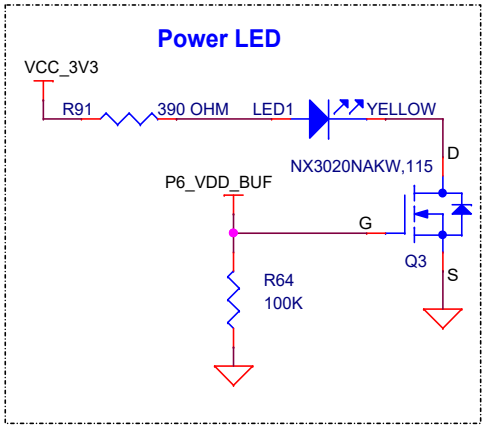

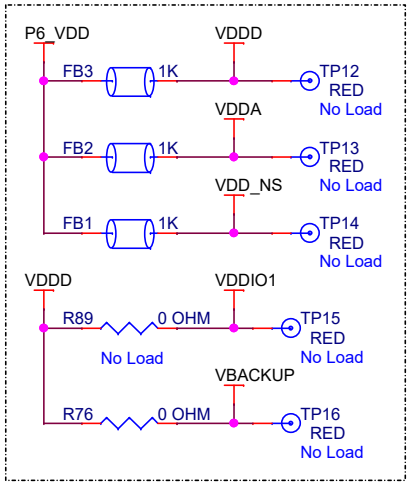

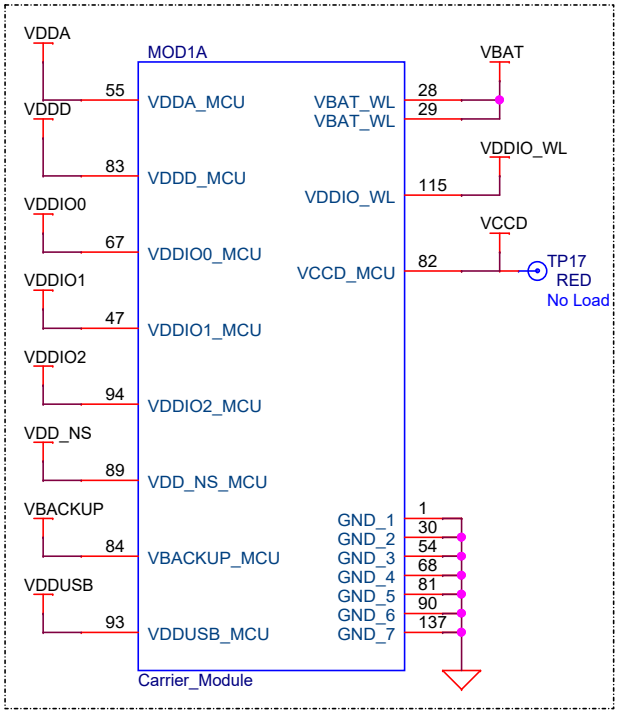

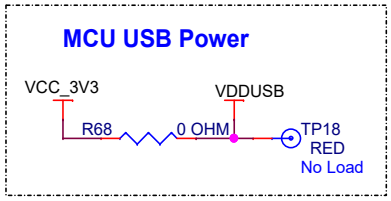

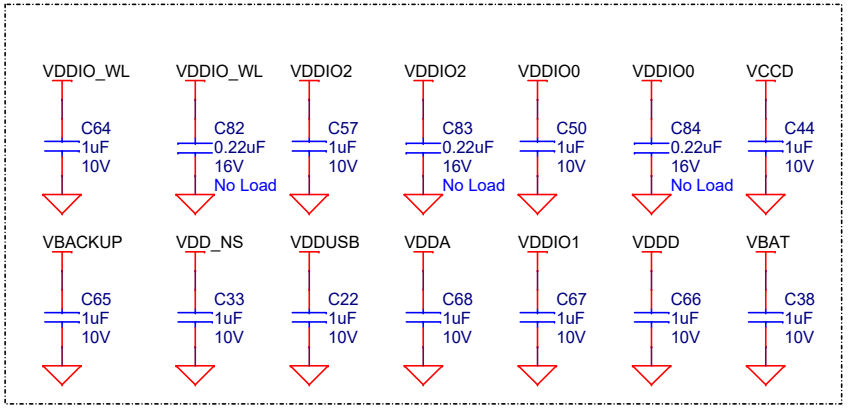

CYPRESS SEMICONDUCTOR
198 CHAMPION COURT
SAN JOSE, CA 95134
(408) 943-2600

CYPRESS SEMICONDUCTOR © 2019

SCH Title : CYW9-BASE-01 Pioneer Baseboard				
Page Title : Carrier Module Power				
Size: A4	Document Number: 630-60552-01	Drawn By: TARE	Approved By: RKAD	Rev: 05
Date: Thursday, October 10, 2019		Sheet 8 of 13		

Carrier Module Signals

MOD1B

VREF

P6_I2C_SCL 136 I2C_SCL
P6_I2C_SDA 133 I2C_SDA
53 ARD_AREF

ARD_A0 52 ARD_A0
ARD_A1 60 ARD_A1
ARD_A2 59 ARD_A2
ARD_A3 58 ARD_A3
ARD_A4 62 ARD_A4
ARD_A5 63 ARD_A5
ARD_A6 61 ARD_A6
ARD_A7 64 ARD_A7

TRACE_CLK 44 ETM_CLK

PAD_A8 46 ARD_A8
PAD_A9 48 ARD_A9
PAD_A10 49 ARD_A10
PAD_A11 45 ARD_A11
A12 50 ARD_A12
A13 56 ARD_A13
A14 57 ARD_A14
A15 51 ARD_A15

ARD_D0 2 ARD_D0
ARD_D1 3 ARD_D1
ARD_D2 4 ARD_D2
ARD_D3 6 ARD_D3
ARD_D4 5 ARD_D4
ARD_D5 9 ARD_D5
ARD_D6 7 ARD_D6
ARD_D7 8 ARD_D7

ARD_D8 23 ARD_D8
ARD_D9 25 ARD_D9
ARD_D10 78 ARD_D10
ARD_D11 76 ARD_D11
ARD_D12 75 ARD_D12
ARD_D13 77 ARD_D13

USER_BTN_1 130 BUTTON_1
USER_BTN_2 125 BUTTON_2

XRES_L_MCU 39 MCU_XRES_L
TDO_SWO 40 MCU_TDO
TDI 43 MCU_TDI
TMS_SWDIO 41 MCU_TMS_SWDIO
TCLK_SWCLK 42 MCU_TCLK_SWCLK

CSX_TX 124 PAD_CS_TX
CSB_0 33 PAD_CSB0
CSB_1 31 PAD_CSB1
CSS_0 36 PAD_CSS0
CSS_1 34 PAD_CSS1
CSS_2 32 PAD_CSS2
CSS_3 38 PAD_CSS3
CSS_4 37 PAD_CSS4
CSD_SHIELD 98 PAD_CAP_SH

FRAM_SSEL 71 FRAM_SS_L
FLASH_SSEL 72 FLASH_SS_L
QSPI_CLK 66 R119 22E QSPI_SCK
QSPI_DATA0 70 R118 22E QSPI_IO0
QSPI_DATA1 74 R121 22E QSPI_IO1
QSPI_DATA2 65 R120 22E QSPI_IO2
QSPI_DATA3 73 R122 22E QSPI_IO3

SD_CMD 79 SD_CMD
SD_CLK 80 SD_CLK
SD_DATA0 88 SD_DAT0
SD_DATA1 86 SD_DAT1
SD_DATA2 85 SD_DAT2
SD_DATA3 87 SD_DAT3
SD_CD_L 97 PAD_SD_CD_L

MCU_USBDP 92 P6_USB_DP
MCU_USBDM 91 P6_USB_DM

USB_VBUS_DET 134 USB_VBUS_DET
USB_INT 135 USB_INT_L
USB_HOST_EN 127 USB_HOST_EN

RGB_R 123 RGB_R_LED_L
RGB_G 132 RGB_G_LED_L
RGB_B 26 RGB_B_LED_L

LED_1 126 O_LED_L
LED_2 69 R_LED_L

MCU_IO_0 129 IO0
MCU_IO_1 131 IO1
MCU_IO_2 128 IO2
MCU_IO_3 24 IO3
MCU_IO_4 35 IO4
MCU_IO_5 95 IO5
MCU_IO_6 96 IO6

Carrier_Module

Reset Button

XRES_L_MCU SW1 EVQ-PE105K

Carrier Module Signals

MOD1C

Note: Not all nets connected to Carrier_Module are actually connected to a Pin. Please refer module schematic for pinout details

100 WL_SDIO_DATA0
101 WL_SDIO_DATA1
102 WL_SDIO_DATA2
104 WL_SDIO_DATA3
103 WL_SDIO_CMD
99 WL_SDIO_CLK

14 WL_HOST_WAKE
15 WL_DEV_WAKE
16 WL_REG_ON

11 WL_UART_TX
12 WL_UART_RX
13 WL_IO_1
10 WL_IO_2

20 WL_JTAG_TCK
19 WL_JTAG_TMS
21 WL_JTAG_TRST_L
18 WL_JTAG_TDI
17 WL_JTAG_TDO
22 WL_JTAG_SEL

WL_UART_TX 11
WL_UART_RX 12
WL_GPIO_1 13
WL_GPIO_2 10

WL_JTAG_TCLK 20
WL_JTAG_TMS 19
WL_JTAG_TRST_L 21
WL_JTAG_TDI 18
WL_JTAG_TDO 17
WL_JTAG_SEL 22

BT_UART_TXD 108 BT_UART_TXD
BT_UART_RXD 106 BT_UART_RXD
BT_UART_CTS 107 BT_UART_CTS
BT_UART_RTS 109 BT_UART_RTS

BT_HOST_WAKE 122
BT_DEV_WAKE 120
BT_REG_ON 121

BT_I2S_CLK 112 BT_I2S_CLK
BT_I2S_WS 111 BT_I2S_WS
BT_I2S_DO 114 BT_I2S_DO
BT_I2S_DI 113 BT_I2S_DI

BT_IO_2 116 BT_GPIO_2
BT_IO_3 117 BT_GPIO_3
BT_IO_4 119 BT_GPIO_4
BT_IO_5 118 BT_GPIO_5

RFU_1 27
RFU_2 105

LPO_IN 110

Carrier_Module

CapSense Multiplexed Pins

PAD_CS_TX R33 2K R145 0 OHM No Load CS_RX_TX IO7
PAD_CSB0 R24 2K R144 0 OHM No Load CS_BTN_0 IO8
PAD_CSB1 R25 2K R143 0 OHM No Load CS_BTN_1 IO9
PAD_CSS0 R28 560 OHM R142 0 OHM No Load CS_SLD_0 IO10
PAD_CSS1 R29 560 OHM R152 0 OHM No Load CS_SLD_1 IO11
PAD_CSS2 R30 560 OHM R153 0 OHM No Load CS_SLD_2 IO12
PAD_CSS3 R31 560 OHM R151 0 OHM No Load CS_SLD_3 IO13
PAD_CSS4 R32 560 OHM R149 0 OHM No Load CS_SLD_4 IO14
PAD_CAP_SH R38 0 OHM R155 0 OHM No Load CS_CAP_SH IO15

TRACE Multiplexed Pins

PAD_A11 R117 0 OHM R129 0 OHM No Load A11 TRACEDATA_0
PAD_A10 R123 0 OHM R128 0 OHM No Load A10 TRACEDATA_1
PAD_A9 R124 0 OHM R127 0 OHM No Load A9 TRACEDATA_2
PAD_A8 R125 0 OHM R126 0 OHM No Load A8 TRACEDATA_3

P6_USB_ID

IO2 R174 0 OHM P6_USB_ID

Card Detect Multiplexing

ARD_D12 R159 0 OHM No Load
PAD_SD_CD_L R161 0 OHM No Load
R160 0 OHM No Load
SD_CD_L IO16

CYPRESS SEMICONDUCTOR
198 CHAMPION COURT
SAN JOSE, CA 95134
(408) 943-2600

CYPRESS SEMICONDUCTOR © 2019

SCH Title : CYW9-BASE-01 Pioneer Baseboard
Page Title : Carrier Module Signals

Size	Document Number	Drawn By	Approved By	Rev
A4	630-60552-01	TARE	RKAD	05

Date: Thursday, October 10, 2019 Sheet 9 of 13

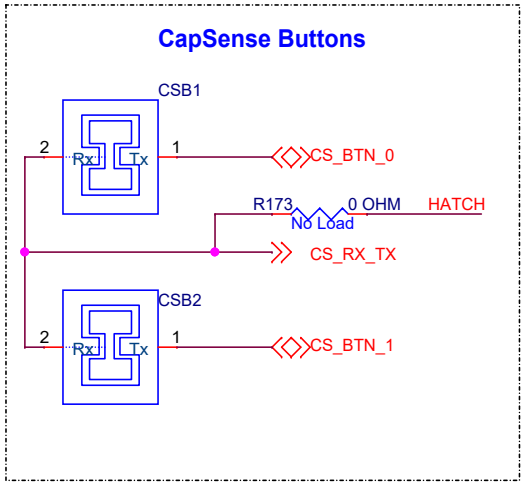

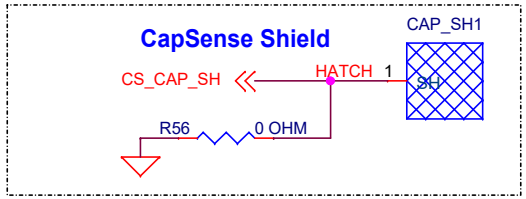

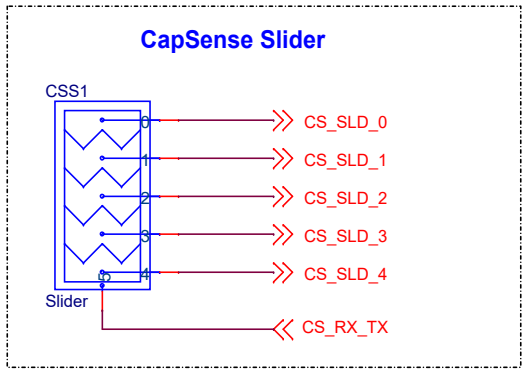

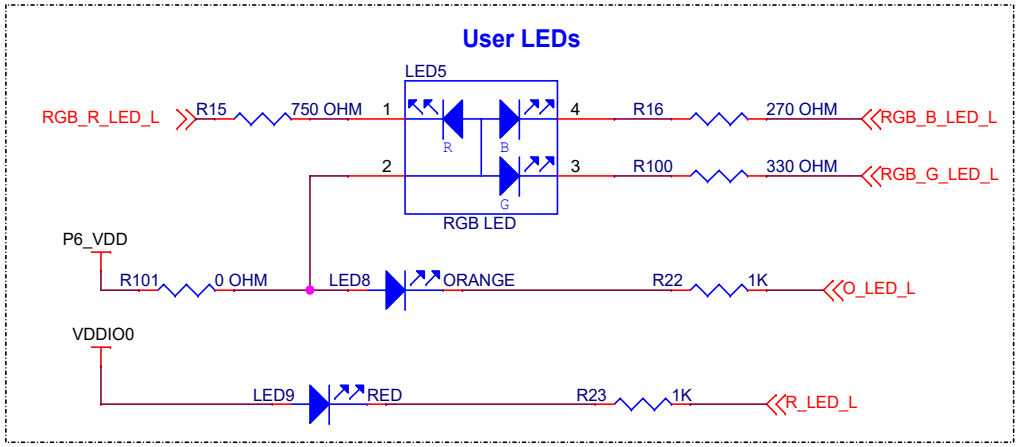

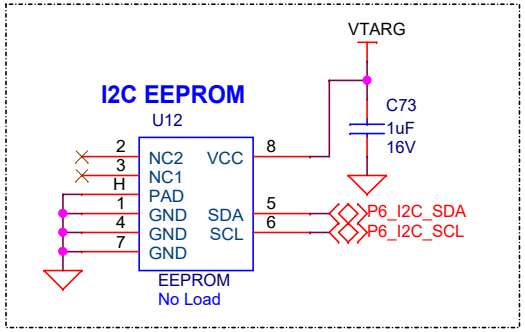

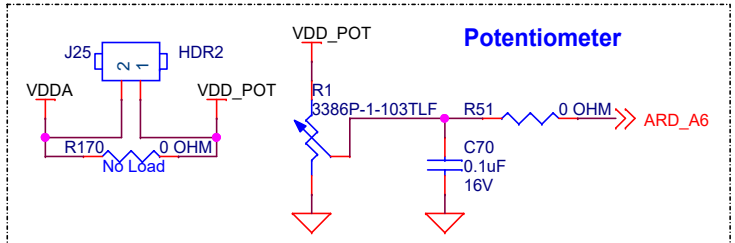

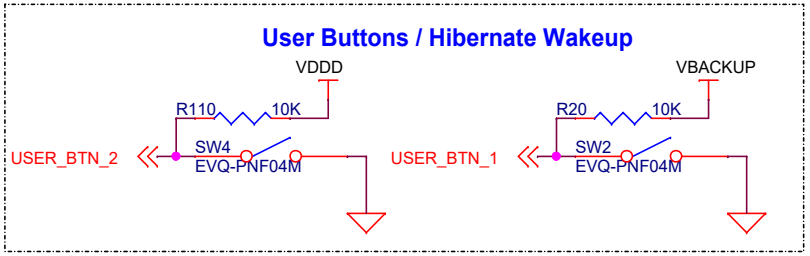

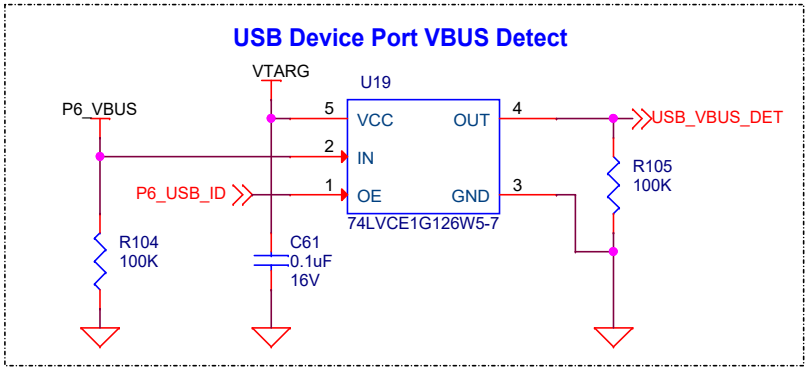

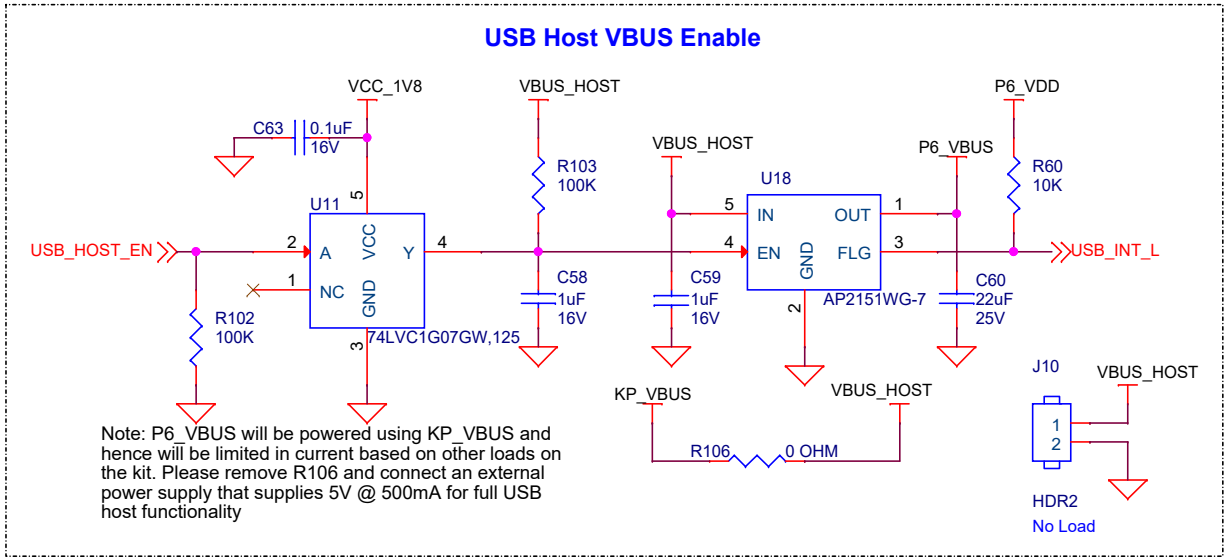

CYPRESS SEMICONDUCTOR
198 CHAMPION COURT
SAN JOSE, CA 95134
(408) 943-2600

CYPRESS SEMICONDUCTOR © 2019

SCH Title : CYW9-BASE-01 Pioneer Baseboard				
Page Title : Peripherals				
Size: A4	Document Number: 630-60552-01	Drawn By: TARE	Approved By: RKAD	Rev: 05
Date: Thursday, October 10, 2019		Sheet 10 of 13		

Arduino and Extended Headers

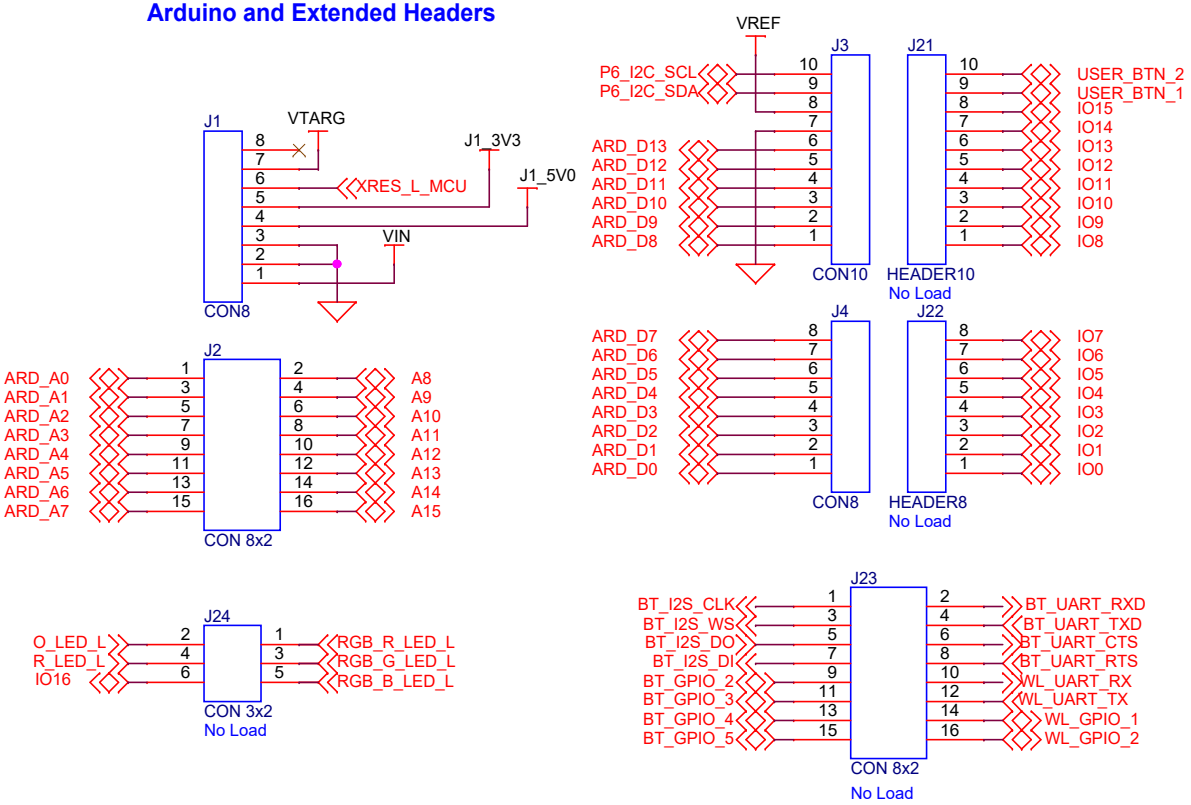

Quad SPI Flash Memory Section

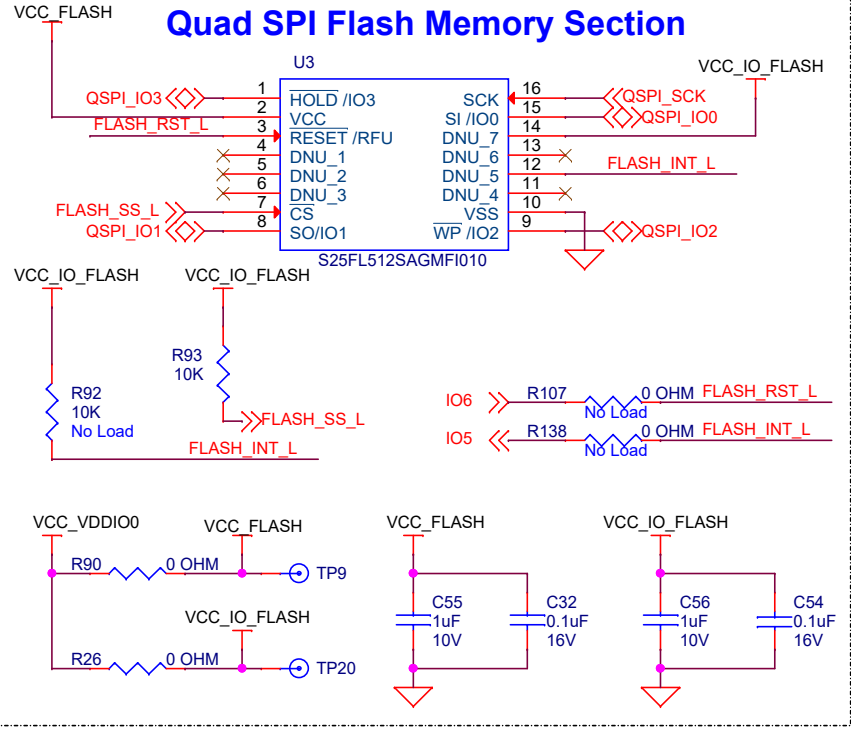

Arduino Header O/P

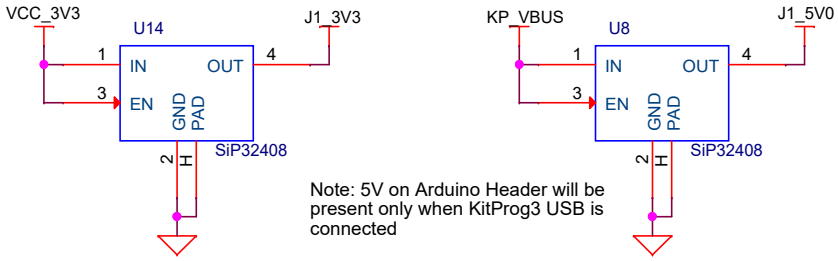

Quad SPI F-RAM

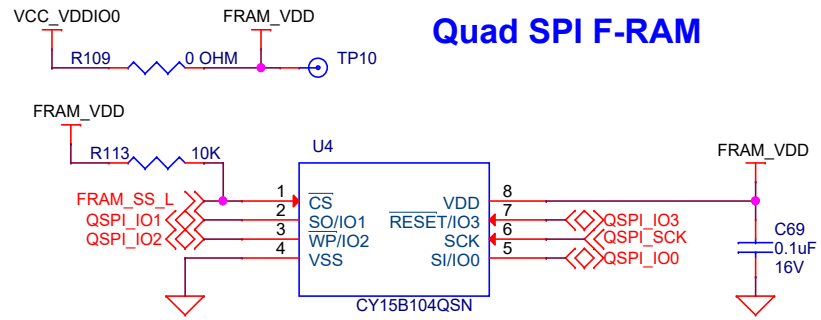

CYPRESS SEMICONDUCTOR
198 CHAMPION COURT
SAN JOSE, CA 95134
(408) 943-2600

CYPRESS SEMICONDUCTOR © 2019

SCH Title : CYW9-BASE-01 Pioneer Baseboard				
Page Title : Expansion Headers & Memory				
Size: A4	Document Number: 630-60552-01	Drawn By: TARE	Approved By: RKAD	Rev: 05
Date: Wednesday, September 18, 2019		Sheet 11 of 13		

microSD Card Section

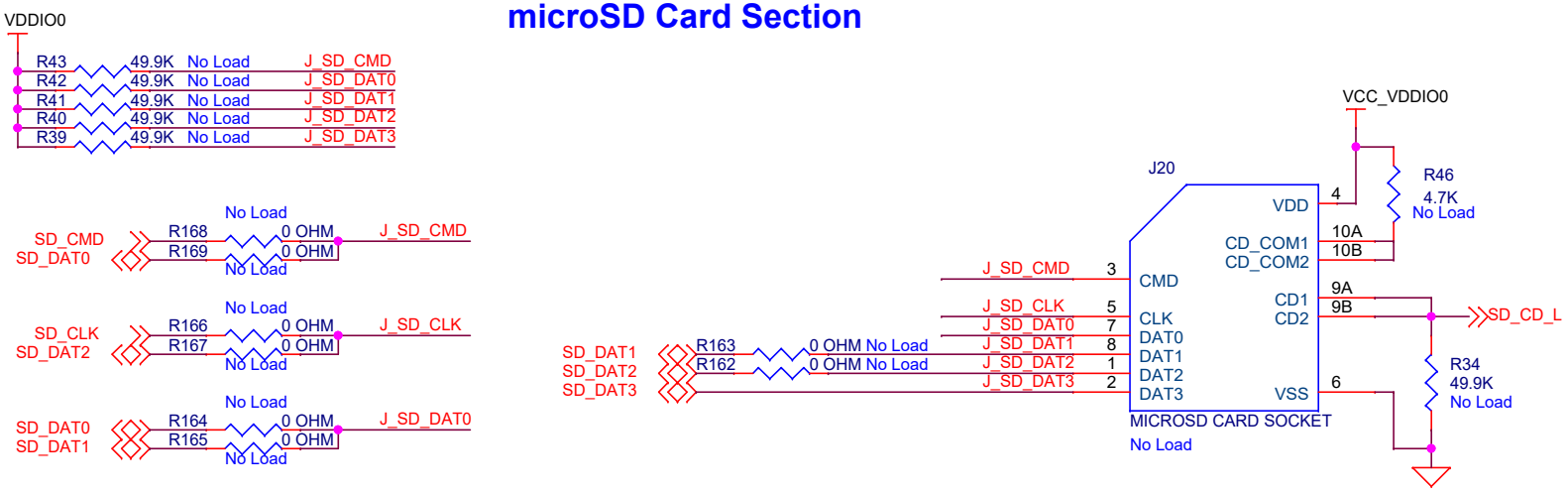

Note: Load R165, R167 and R169 and remove R162, R163, R164, R166 and R168 to change from SDHC to SPI interface for microSD card

Accessories

Cylindrical Bump-ons

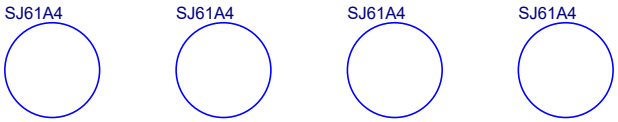

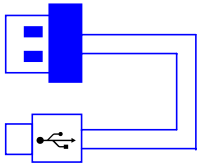

PCBA label

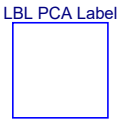

Jumper Shunts

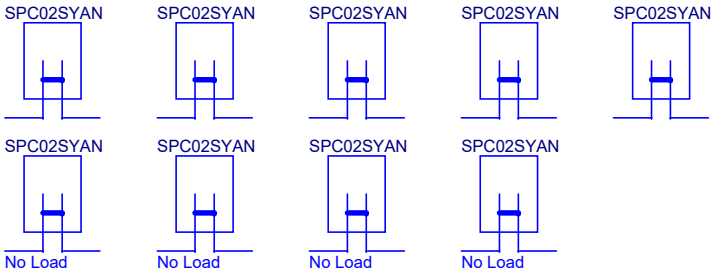

Acrylic Overlay

Overlay

Color: Clear, Transparent
Finish: Matt

Dimensions:
45.21mm - length
36.93mm - height
1mm - thickness

CYPRESS SEMICONDUCTOR
198 CHAMPION COURT
SAN JOSE, CA 95134
(408) 943-2600

CYPRESS SEMICONDUCTOR © 2019

SCH Title :	CYW9-BASE-01 Pioneer Baseboard
Page Title :	microSD card & Accessories

Size	Document Number	Drawn By	Approved By	Rev
A4	630-60552-01	TARE	RKAD	05

Date: Thursday, October 10, 2019 Sheet 12 of 13

REVISION HISTORY

REV	DESCRIPTION OF CHANGE	DATE
01	Initial Internal Release	2019/05/13
02	Internal Release	2019/05/21
03	Internal Release	2019/07/23
04	Internal Release	2019/08/08
05	Initial Release	2019/09/18

CYPRESS SEMICONDUCTOR
198 CHAMPION COURT
SAN JOSE, CA 95134
(408) 943-2600

CYPRESS SEMICONDUCTOR © 2019

SCH Title : CYW9-BASE-01 Pioneer Baseboard

Page Title : Revision History

Size	Document Number	Drawn By	Approved By	Rev
A4	630-60552-01	TARE	RKAD	05

Date: Thursday, October 10, 2019 Sheet 13 of 13