CYUSBS232 USB-UART LP BOARD
REV 03

PAGE NO	TITLE
01	TITLE PAGE
02	CY7C65213 DEVICE CONNECTION

PCBA NUMBER : 121-60077-01
PCB NUMBER : 600-60096-01
FAB DRAWING NUMBER : 610-60095-01
ASSEMBLY DRAWING NUMBER : 620-60096-01

CYPRESS PERFORM

CYPRESS SEMICONDUCTOR © 2013		
Title: CYUSBS232 USB-UART LP BOARD		
Size: A	Document Number: 630-60096-01	Rev: 03
TITLE PAGE		
Date: Wednesday, August 28, 2013	Sheet 1 of 2	

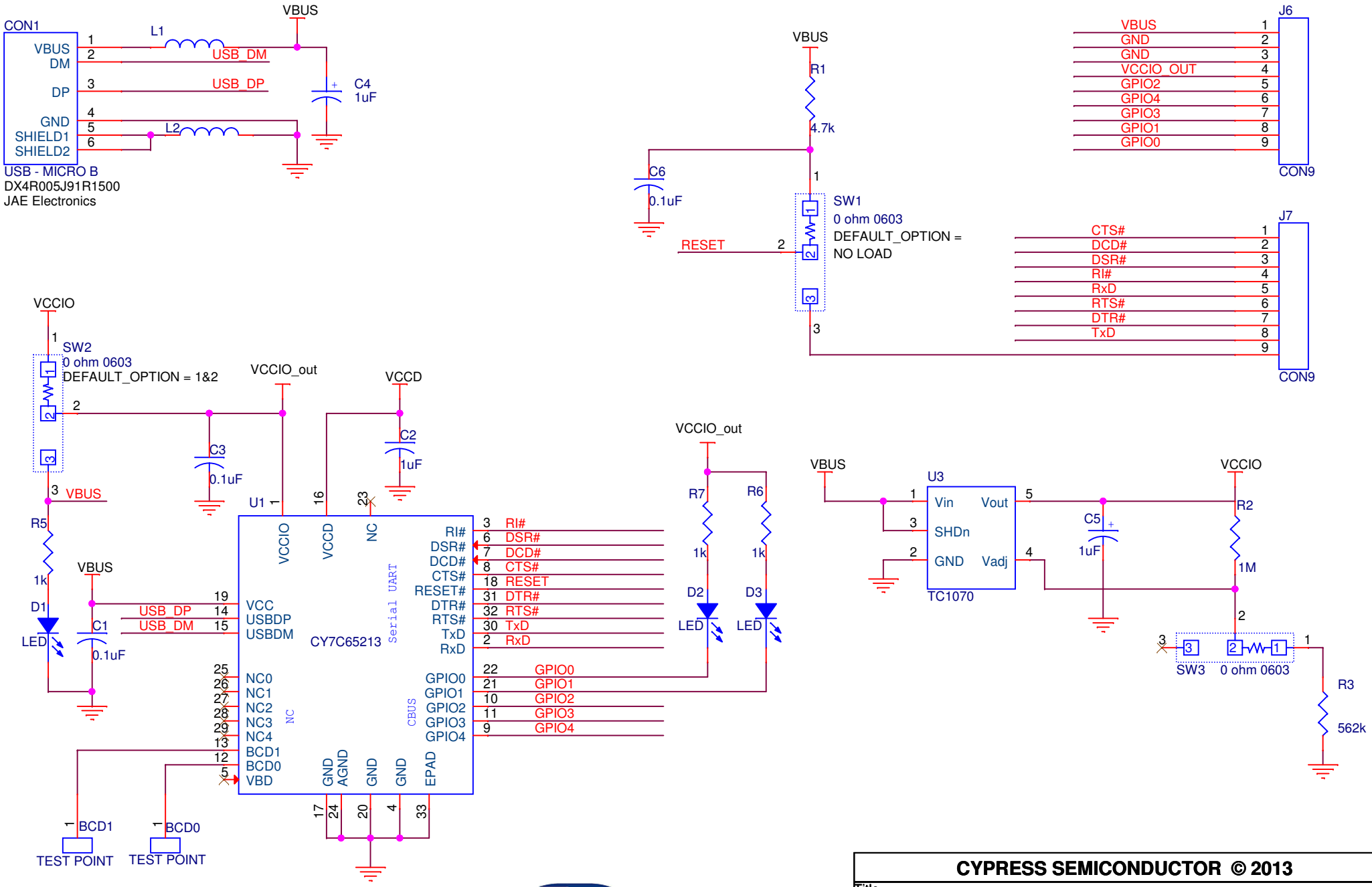

CYPRESS SEMICONDUCTOR © 2013

Title	CYUSBS232 USB-UART LP BOARD	
Size A	Document Number 630-60096-01	Rev 03
CY7C65213 DEVICE CONNECTION		
Date: Wednesday, August 28, 2013	Sheet 2 of 2	