BT Module

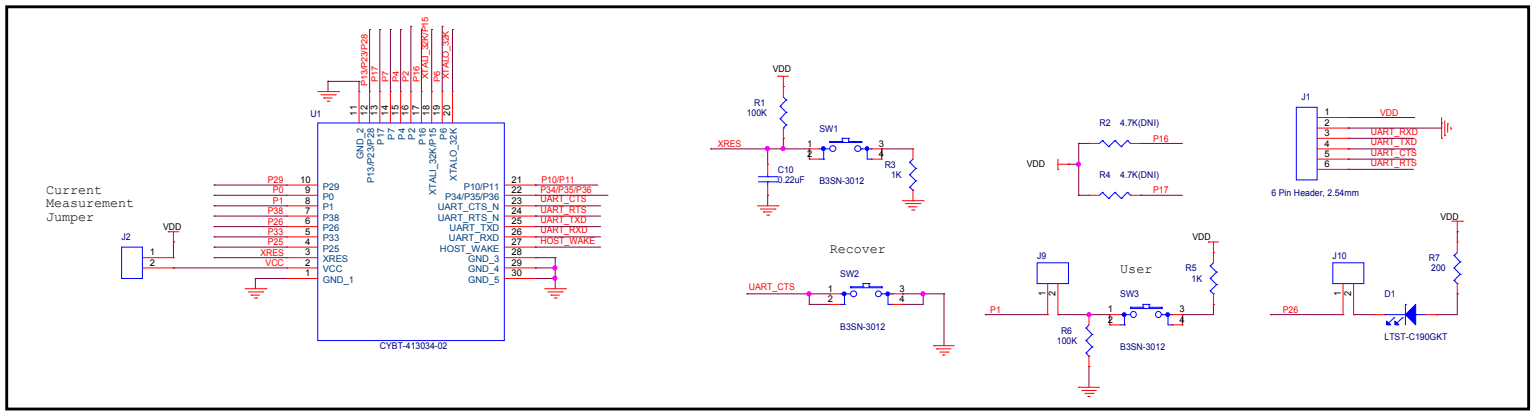

USB to Serial

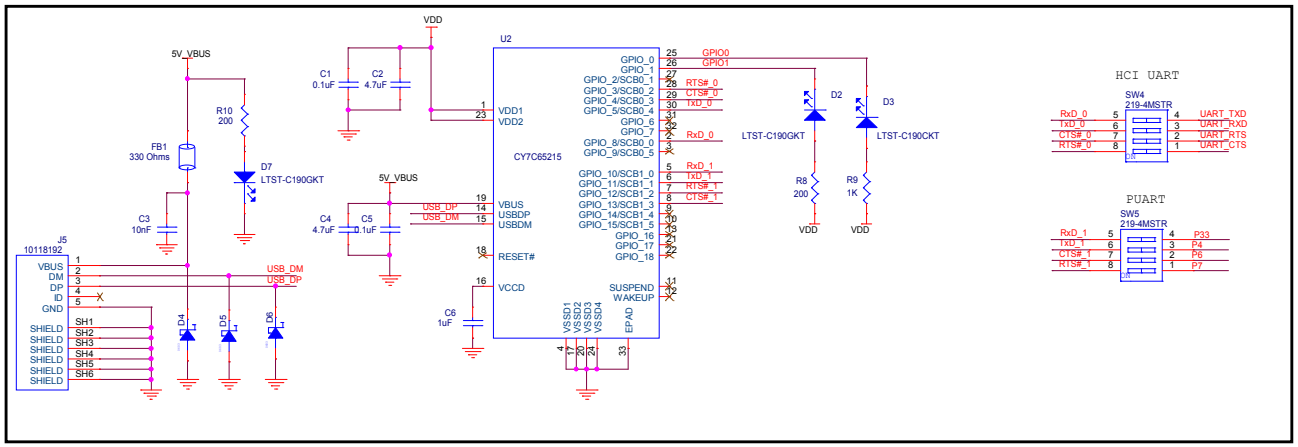

Arduino Connector

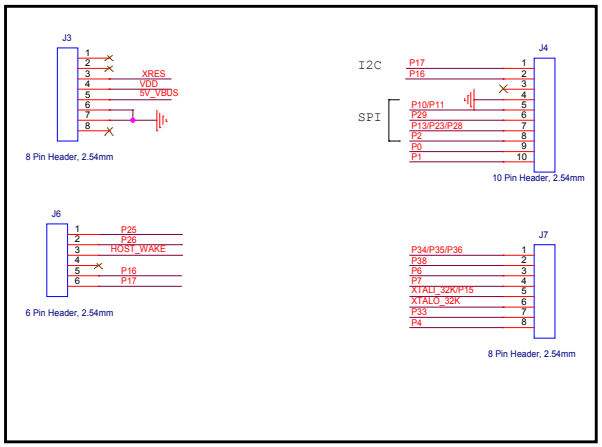

POWER

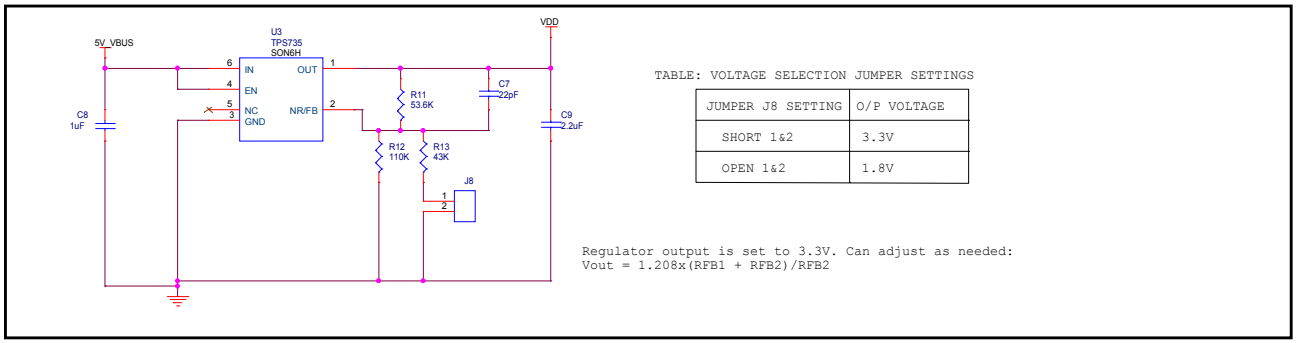

TABLE: VOLTAGE SELECTION JUMPER SETTINGS

JUMPER J8 SETTING	O/P VOLTAGE
SHORT 1&2	3.3V
OPEN 1&2	1.8V

Regulator output is set to 3.3V. Can adjust as needed:
Vout = 1.208x(RFB1 + RFB2)/RFB2

Cypress Semiconductor		
Title: CYBT-413034-EVAL		
Size: C	Document Number: 630-20119-01	Rev: 1.0
Date: Thursday, April 19, 2018	Sheet 1 of 1	