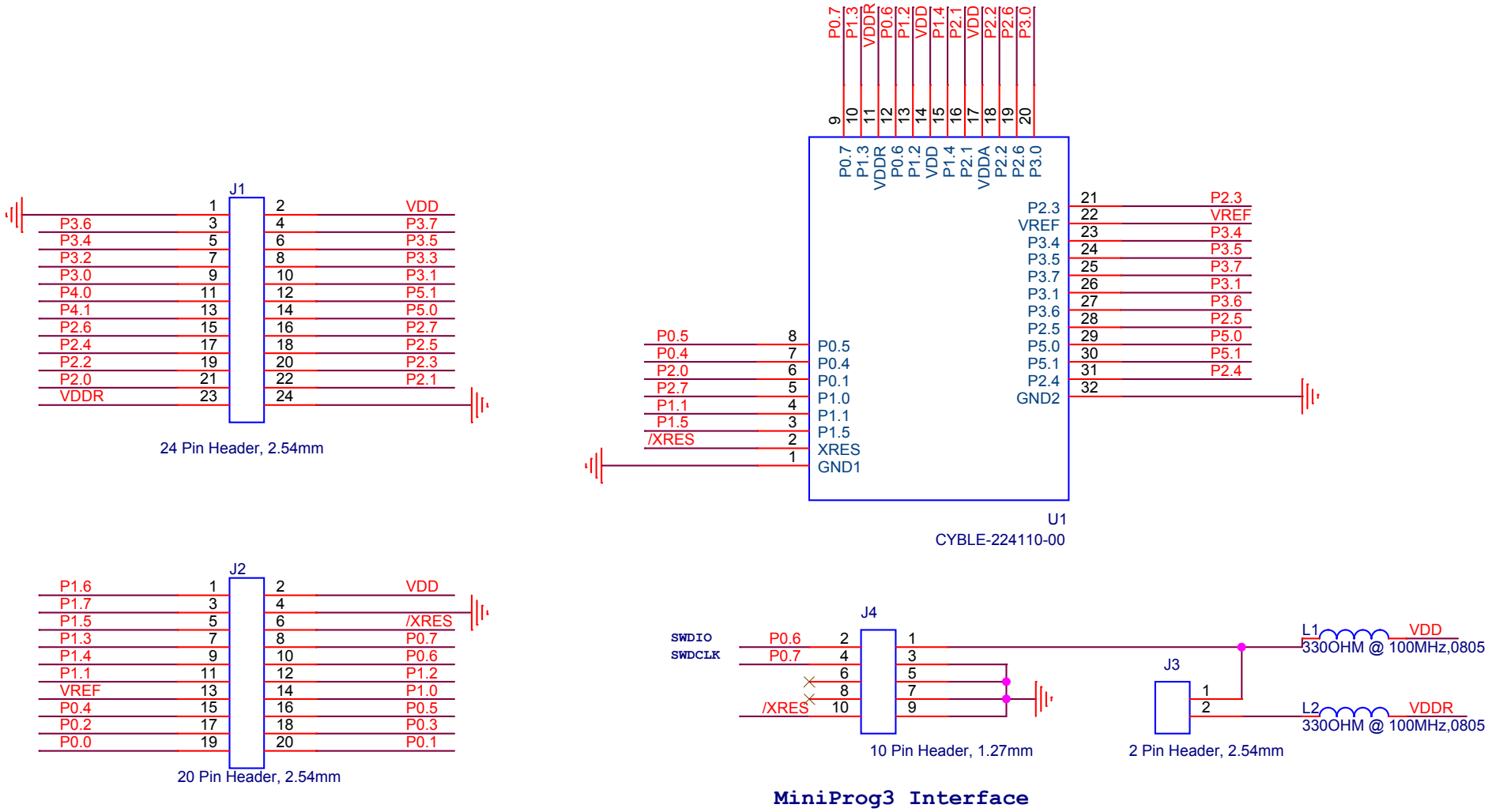

PCB: 600-20088-01
FAB DRW: 610-20088-01
ASSY DRW: 620-20088-01

CYPRESS SEMICONDUCTOR 2015		
Title: CYBLE-224110-EVAL		
Size: A	Document Number: 630-20088-01	Rev: 1.1
Date: Friday, November 13, 2015	Sheet 1 of 1	