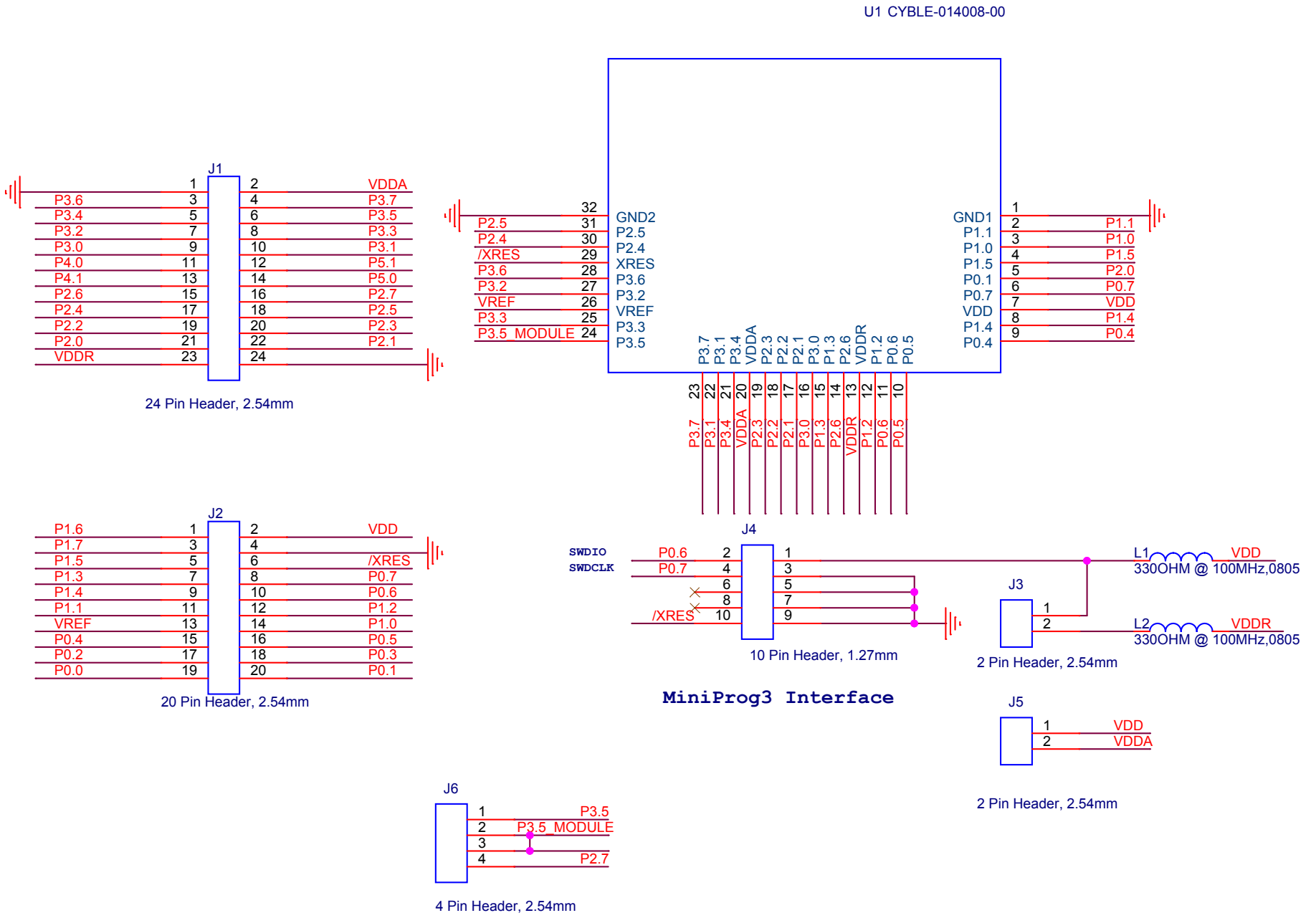

PCB: 600-20083-01
FAB DRW: 610-20083-01
ASSY DRW: 620-20083-01

CYPRESS SEMICONDUCTOR 2015		
Title: CYBLE-014008-EVAL		
Size: A	Document Number: 630-20083-01	Rev: 1.1
Date: Tuesday, August 18, 2015	Sheet 1 of 1	