CY8CPROTO-062S2-43439 PSoC™ 62S2 Wi-Fi Bluetooth® prototyping kit

CONTENTS

PAGE	DESCRIPTION
01	Title & Table of Contents
02	Block Diagram
03	KitProg3
04	PSoC™ 6 Module Power
05	PSoC™ 6 Module Signals
06	On-board Accessories-1
07	On-board Accessories-2
08	Accessories
09	Revision History

Drawing Numbers	
PCBA	121-60650-01
PCB	600-60650-01
FAB DRW	610-60650-01
ASSY DRW	620-60650-01
SCH DRW	630-60650-01

Legal Disclaimer :
The information given in this document shall in no event be regarded as a guarantee of conditions or characteristics. With respect to any examples or hints given herein, any typical values stated herein and/or any information regarding the application of the device, Infineon Technologies hereby disclaims any and all warranties and liabilities of any kind, including without limitation, warranties of non-infringement of intellectual property rights of any third party.

SCH Title : PSoC™ 62S2 Wi-Fi Bluetooth® prototyping kit				
Page Title: Title Page				
Size	Document Number	Drawn By	Approved By	Rev
A4	630-60650-01	SAMANTH	RKAD	01
Date: Thursday, February 02, 2023		Sheet 1 of 9		

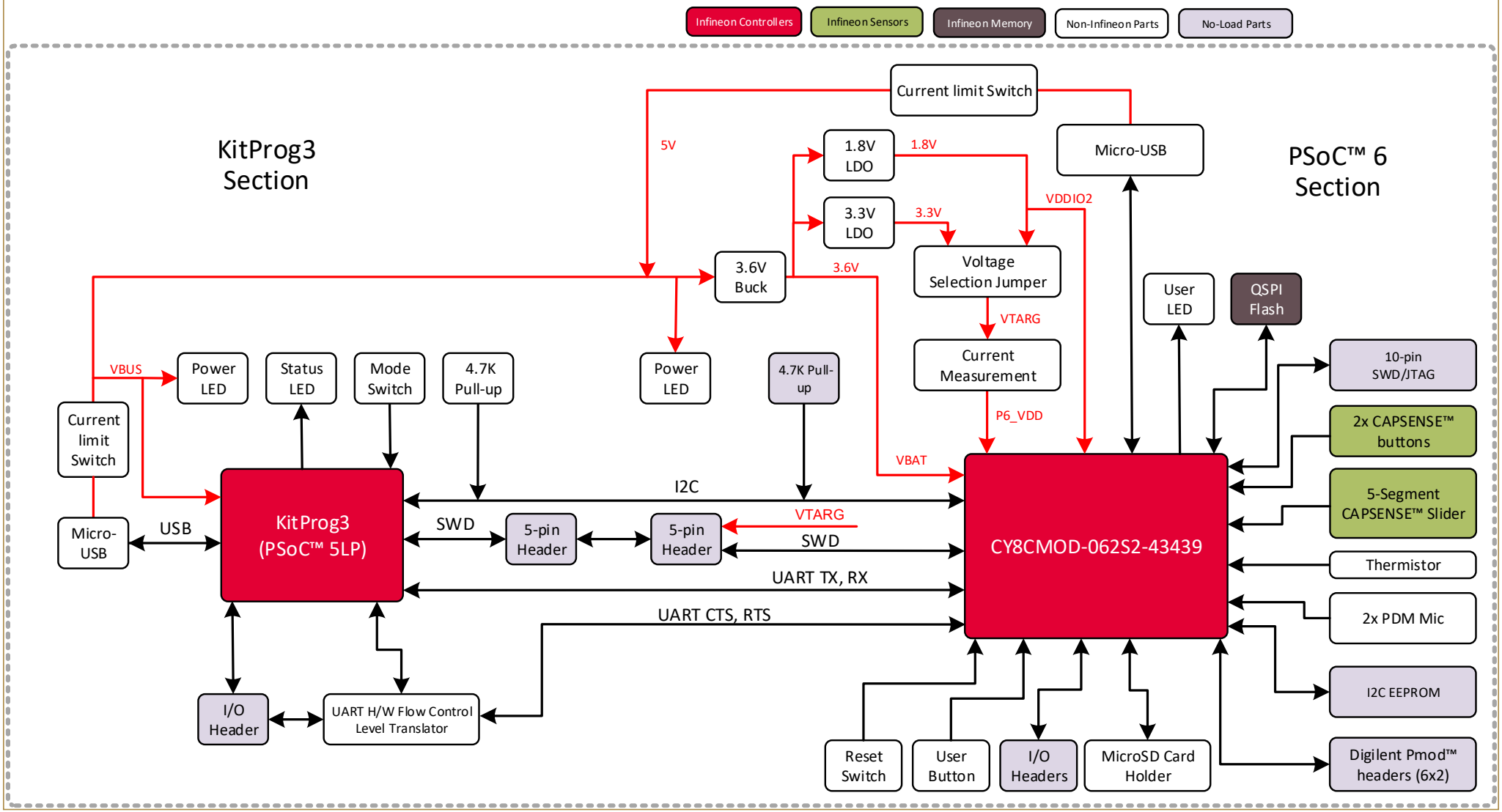

Legal Disclaimer :
The information given in this document shall in no event be regarded as a guarantee of conditions or characteristics. With respect to any examples or hints given herein, any typical values stated herein and/or any information regarding the application of the device, Infineon Technologies hereby disclaims any and all warranties and liabilities of any kind, including without limitation, warranties of non-infringement of intellectual property rights of any third party.

SCH Title : PSoC™ 62S2 Wi-Fi Bluetooth® prototyping kit				
Page Title: Block Diagram				
Size	Document Number	Drawn By	Approved By	Rev
A4	630-60650-01	SAMANTH	RKAD	01
Date: Wednesday, February 01, 2023		Sheet 2 of 9		

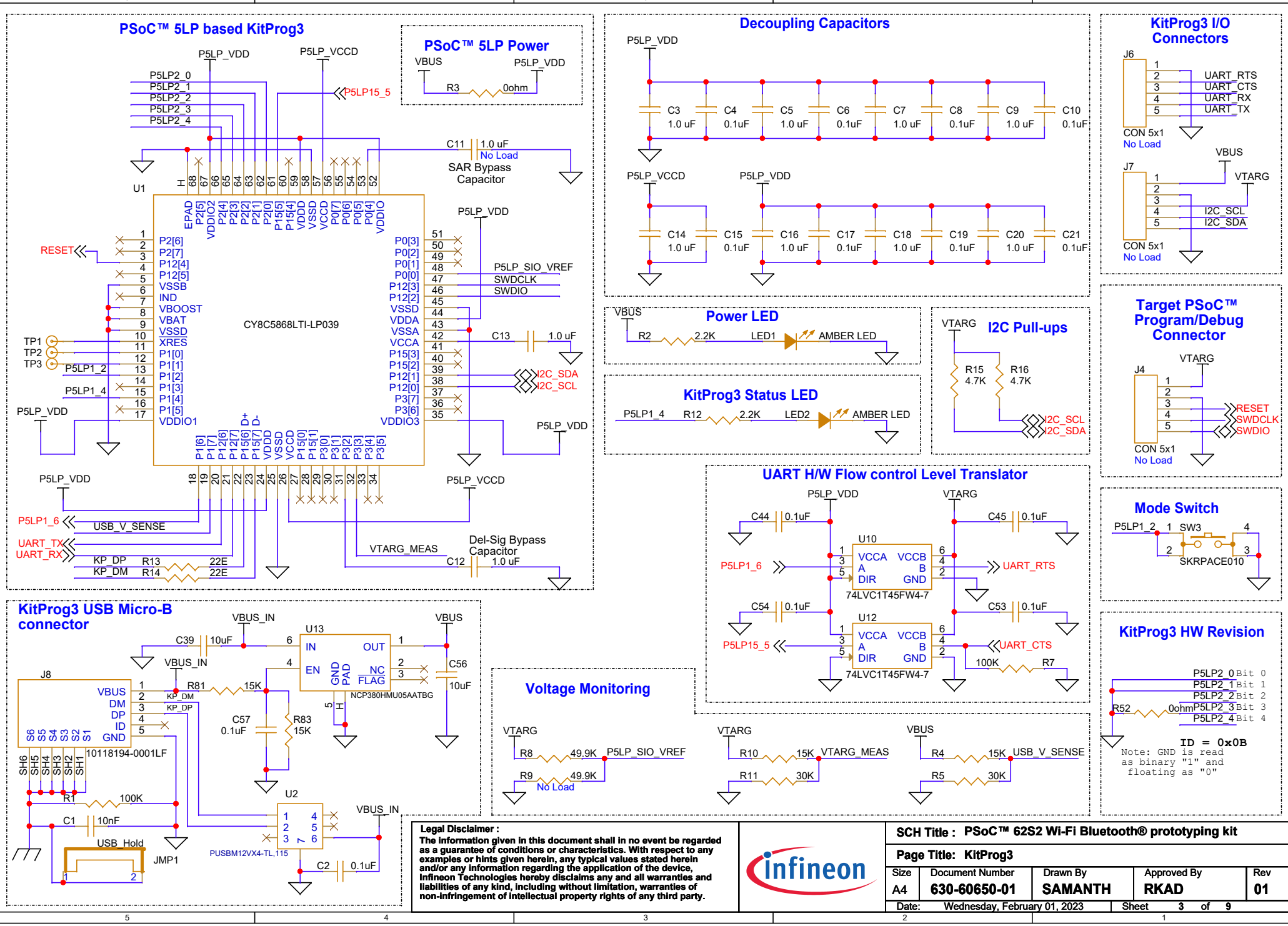

Legal Disclaimer :
The information given in this document shall in no event be regarded as a guarantee of conditions or characteristics. With respect to any examples or hints given herein, any typical values stated herein and/or any information regarding the application of the device, Infineon Technologies hereby disclaims any and all warranties and liabilities of any kind, including without limitation, warranties of non-infringement of intellectual property rights of any third party.

SCH Title : PSoC™ 62S2 Wi-Fi Bluetooth® prototyping kit				
Page Title: KitProg3				
Size	Document Number	Drawn By	Approved By	Rev
A4	630-60650-01	SAMANTH	RKAD	01
Date: Wednesday, February 01, 2023		Sheet 3 of 9		

PSoC™ 6 USB Device Micro-B connector

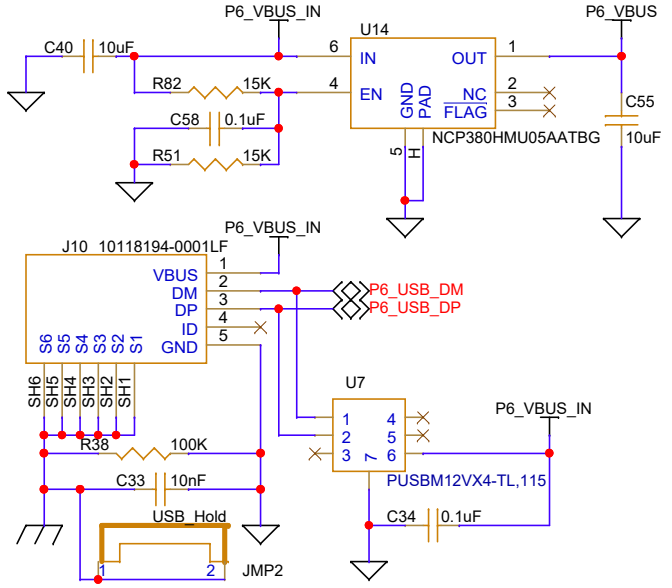

VBAT Voltage Regulator

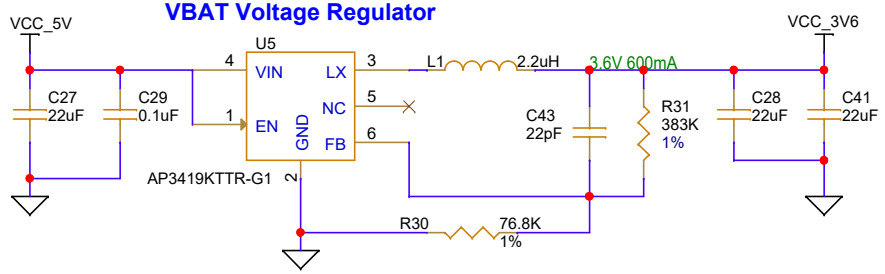

Voltage Selection

Note: Do not remove jumper when powered

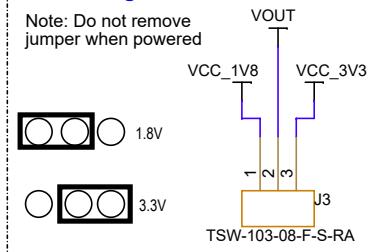

Module I/O Voltage Regulator

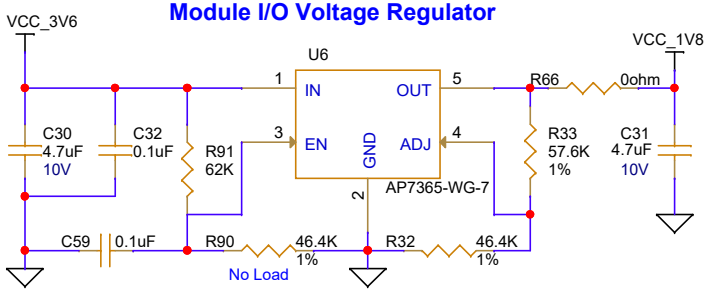

Input Supply Header

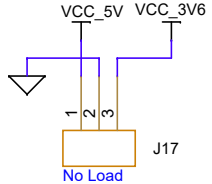

Note: Remove L1 to disable on-board supply.

Reverse Voltage Protection

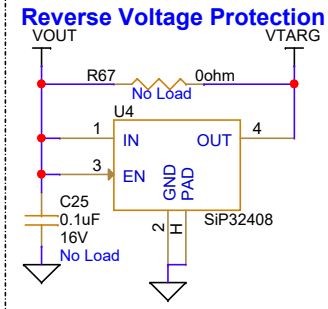

Module Power

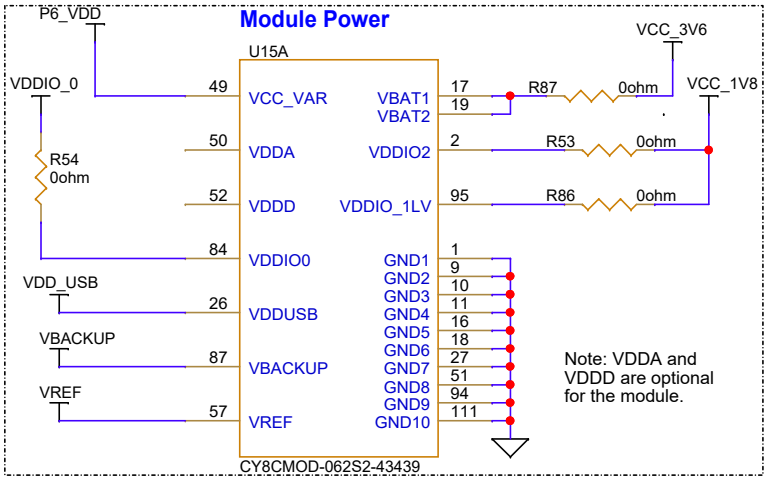

Note: VDDA and VDDD are optional for the module.

Module Variable Voltage Regulator

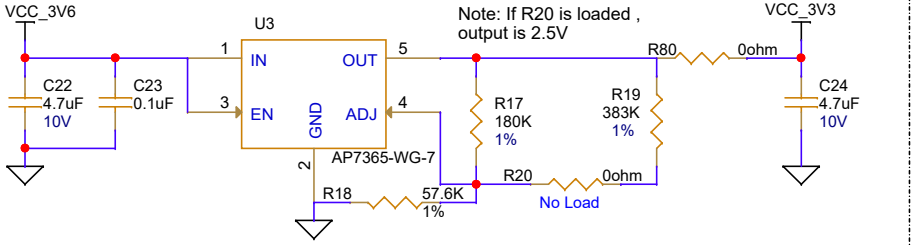

Note: If R20 is loaded , output is 2.5V

Current Measurement



Note: Remove R65 to measure PSoC™ 6 current across VTARG and P6_VDD

Decoupling Capacitors

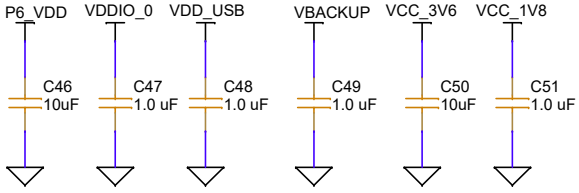

Backup Voltage



Module Power LED

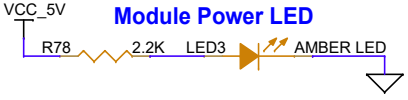

Input Supply

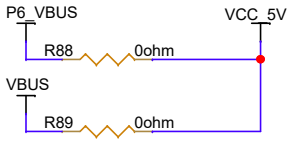

Module USB Voltage

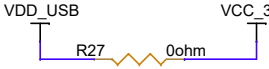

Legal Disclaimer :
The information given in this document shall in no event be regarded as a guarantee of conditions or characteristics. With respect to any examples or hints given herein, any typical values stated herein and/or any information regarding the application of the device, Infineon Technologies hereby disclaims any and all warranties and liabilities of any kind, including without limitation, warranties of non-infringement of intellectual property rights of any third party.

SCH Title : PSoC™ 62S2 Wi-Fi Bluetooth® prototyping kit				
Page Title: PSoC™ 6 Module Power				
Size	Document Number	Drawn By	Approved By	Rev
A4	630-60650-01	SAMANTH	RKAD	01
Date: Thursday, February 02, 2023		Sheet 4 of 9		

CY8CMOD-062S2-43439 Module Signals

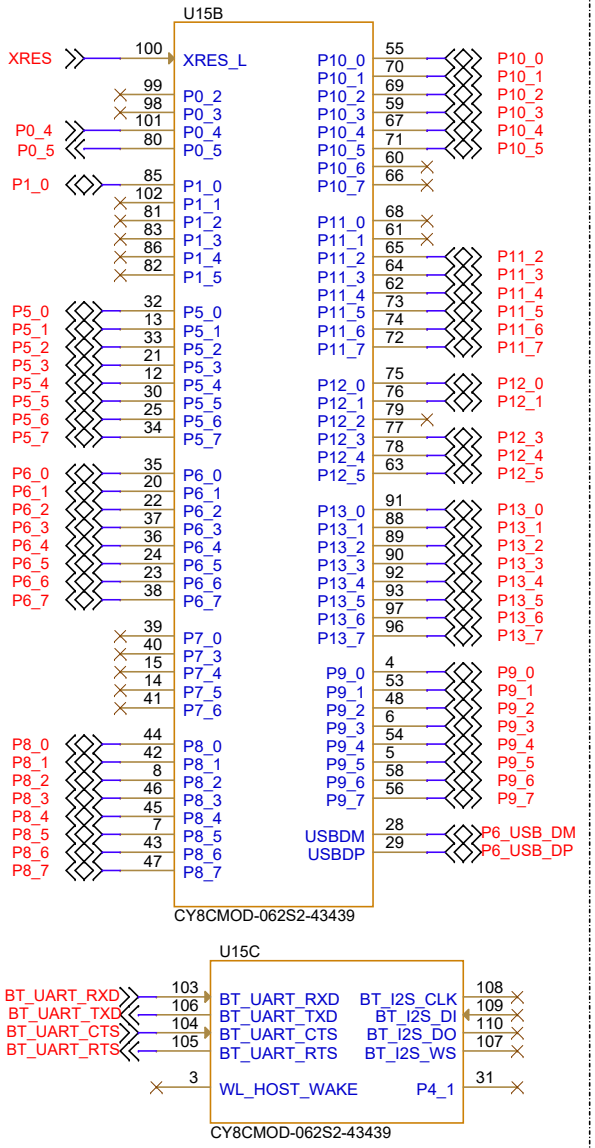

PSoC™ 6 I/O Headers

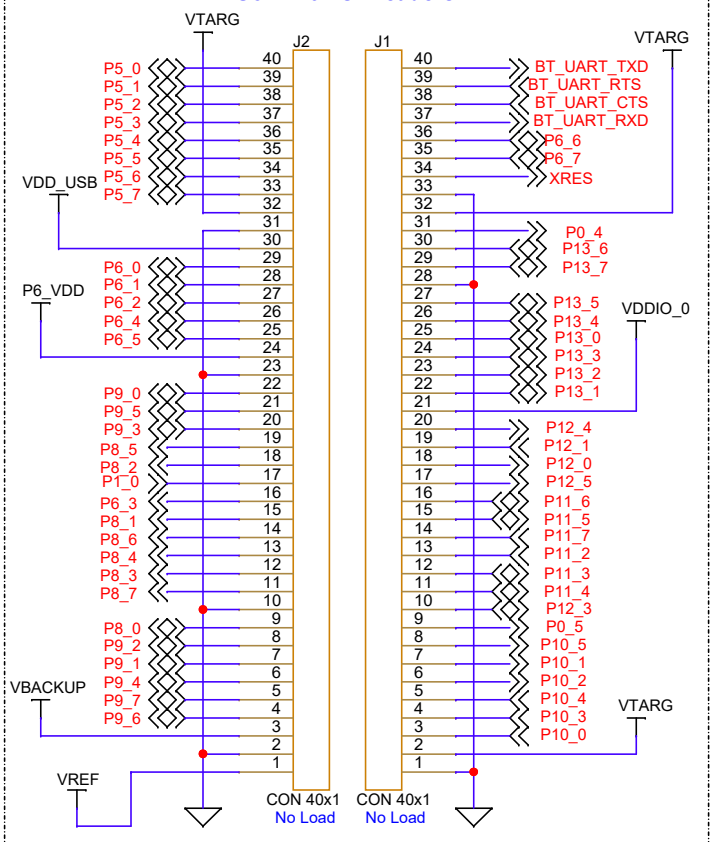

User Button / Hibernate Wakeup

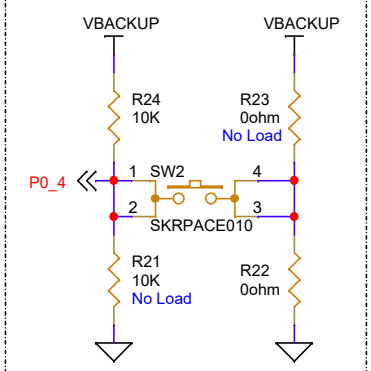

Reset Button

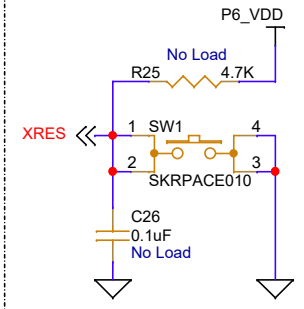

UART with H/W flow control

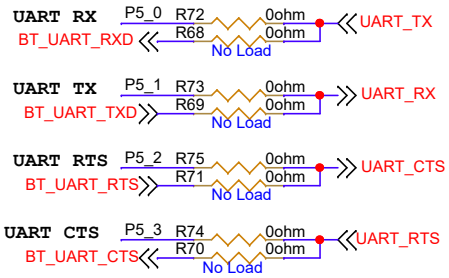

Note: BT UART will only work when Power Selection Jumper is at 1.8V position. 3.3V will damage the device

JTAG Header

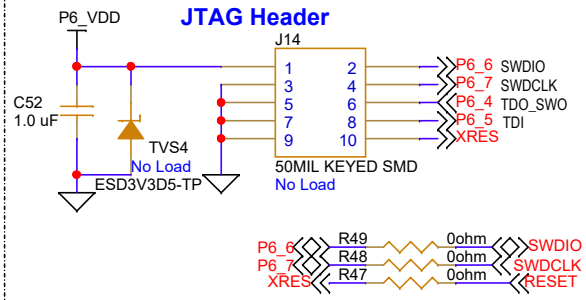

Note: Maximum voltage on P6_VDD is 3.6V. Supplying 5V through the JTAG header will permanently damage the device

User LED

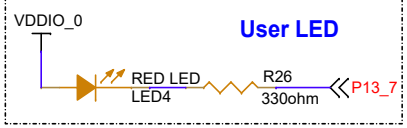

I2C EEPROM

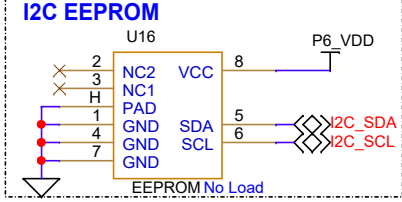

I2C

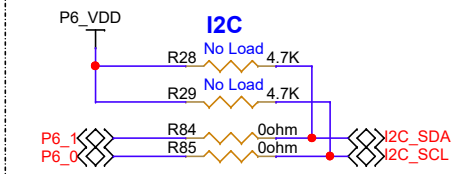

VDDIO_0 Voltage Selection

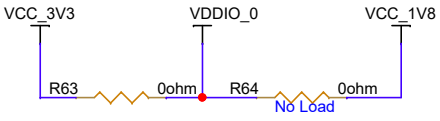

Legal Disclaimer :
The information given in this document shall in no event be regarded as a guarantee of conditions or characteristics. With respect to any examples or hints given herein, any typical values stated herein and/or any information regarding the application of the device, Infineon Technologies hereby disclaims any and all warranties and liabilities of any kind, including without limitation, warranties of non-infringement of intellectual property rights of any third party.

SCH Title : PSoC™ 62S2 Wi-Fi Bluetooth® prototyping kit				
Page Title: PSoC™ 6 Module Signals				
Size	Document Number	Drawn By	Approved By	Rev
A4	630-60650-01	SAMANTH	RKAD	01
Date: Thursday, February 02, 2023		Sheet 5 of 9		

Thermistor and PDM Mic Section

THERM_OUT R36 0ohm P10_1

THERM_OUT R37 0ohm P10_2

Header

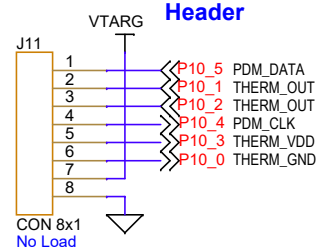

Thermistor

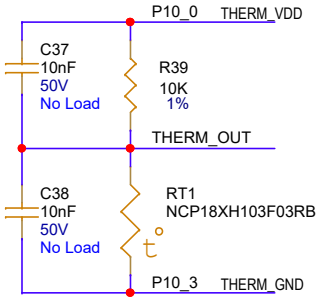

PDM Mic

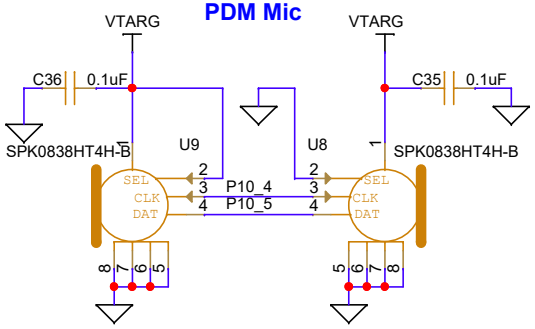

Quad SPI Flash Memory and microSD Card Section

Quad SPI Flash (SMIF)

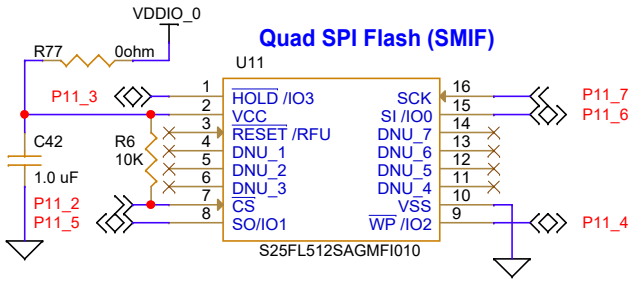

Header

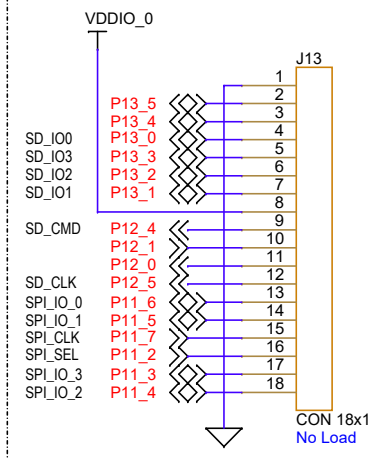

microSD Card

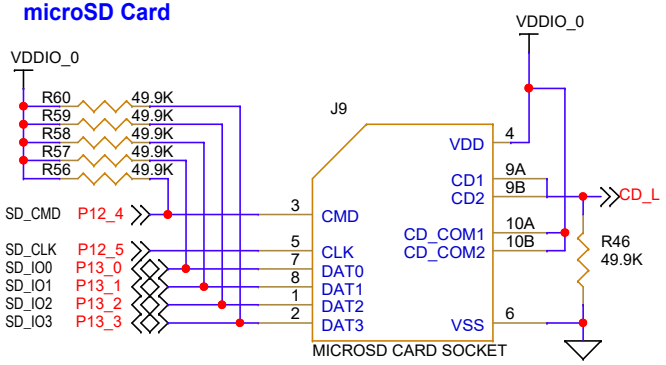

Card Detect Multiplexing

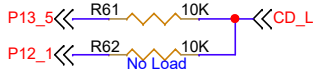

Legal Disclaimer :
The information given in this document shall in no event be regarded as a guarantee of conditions or characteristics. With respect to any examples or hints given herein, any typical values stated herein and/or any information regarding the application of the device, Infineon Technologies hereby disclaims any and all warranties and liabilities of any kind, including without limitation, warranties of non-infringement of intellectual property rights of any third party.

SCH Title : PSoC™ 62S2 Wi-Fi Bluetooth® prototyping kit				
Page Title : On-board Accessories-1				
Size	Document Number	Drawn By	Approved By	Rev
A4	630-60650-01	SAMANTH	RKAD	01
Date: Wednesday, February 01, 2023		Sheet 6 of 9		

CAPSENSE™ Section

Shield

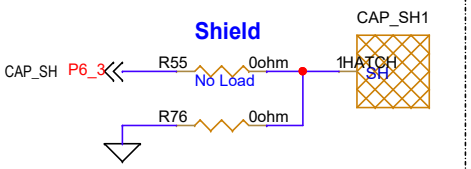

CAPSENSE™ Buttons

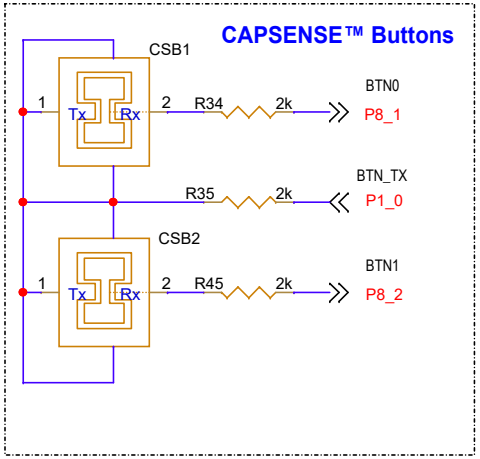

Header

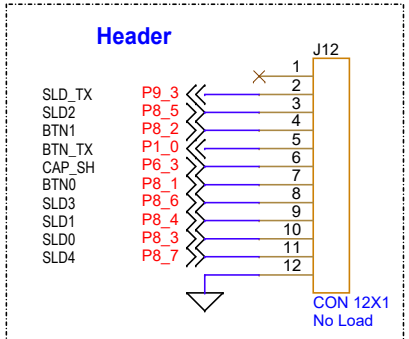

CAPSENSE™ Slider

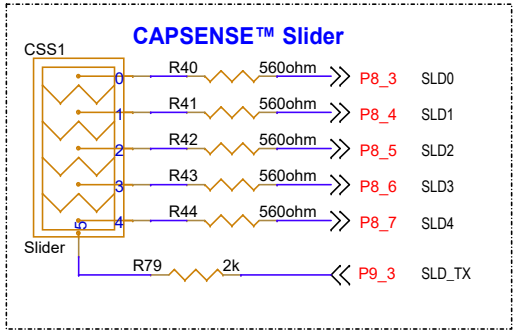

Digilent Pmod™ headers Section

Pmod SPI

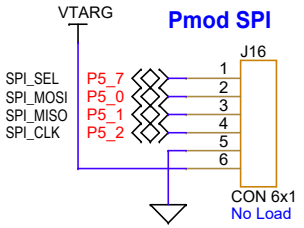

Pmod I2S2

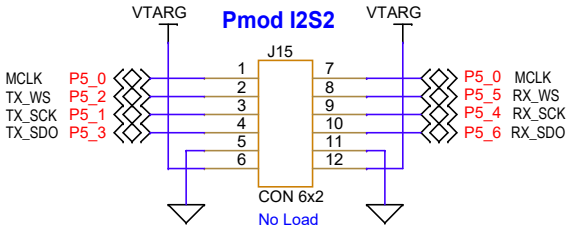

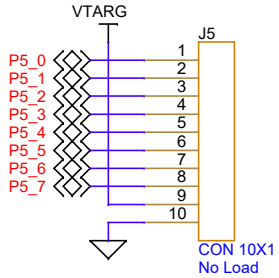

Note: Pmod I2S will only work when VTARG is 3.3V

Legal Disclaimer :
The information given in this document shall in no event be regarded as a guarantee of conditions or characteristics. With respect to any examples or hints given herein, any typical values stated herein and/or any information regarding the application of the device, Infineon Technologies hereby disclaims any and all warranties and liabilities of any kind, including without limitation, warranties of non-infringement of intellectual property rights of any third party.

SCH Title : PSoC™ 62S2 Wi-Fi Bluetooth® prototyping kit				
Page Title: On-board Accessories-2				
Size	Document Number	Drawn By	Approved By	Rev
A4	630-60650-01	SAMANTH	RKAD	01
Date: Wednesday, February 01, 2023		Sheet 7 of 9		

Accessories

PCBA label

LBL PCA Label



Cylindrical Bump-ons

RBS-40 RBS-40 RBS-40 RBS-40



Jumper Shunt

SPC02SYAN



Acrylic Overlay

Acrylic Overlay

Color: Clear, Transparent
Finish: Matt

L = 89.26mm
W = 20.62mm
Thickness = 1mm

ACC13

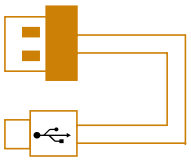

MicroUSB Cable

Legal Disclaimer :
The information given in this document shall in no event be regarded as a guarantee of conditions or characteristics. With respect to any examples or hints given herein, any typical values stated herein and/or any information regarding the application of the device, Infineon Technologies hereby disclaims any and all warranties and liabilities of any kind, including without limitation, warranties of non-infringement of intellectual property rights of any third party.

SCH Title : PSoC™ 62S2 Wi-Fi Bluetooth® prototyping kit				
Page Title: Accessories				
Size	Document Number	Drawn By	Approved By	Rev
A4	630-60650-01	SAMANTH	RKAD	01
Date: Wednesday, February 01, 2023		Sheet 8 of 9		

REVISION HISTORY

REV	DESCRIPTION OF CHANGE	DATE
01	Initial release	2022/10/27

Legal Disclaimer :
The information given in this document shall in no event be regarded as a guarantee of conditions or characteristics. With respect to any examples or hints given herein, any typical values stated herein and/or any information regarding the application of the device, Infineon Technologies hereby disclaims any and all warranties and liabilities of any kind, including without limitation, warranties of non-infringement of intellectual property rights of any third party.

SCH Title : PSoC™ 62S2 Wi-Fi Bluetooth® prototyping kit				
Page Title: Revision History				
Size	Document Number	Drawn By	Approved By	Rev
A4	630-60650-01	SAMANTH	RKAD	01
Date: Wednesday, February 01, 2023		Sheet 9 of 9		