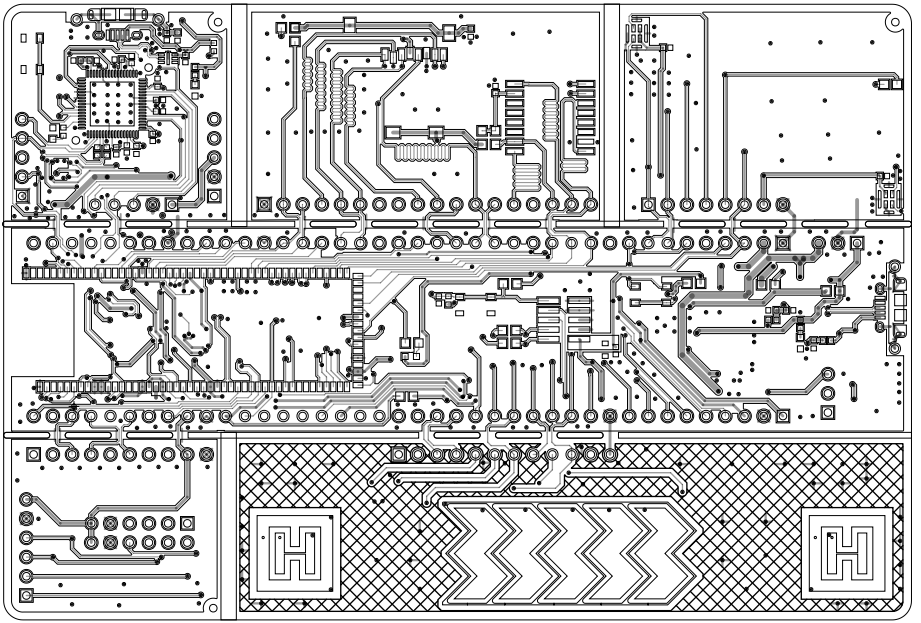

Infineon Technologies AG
Am Campeon 1-15
85579 NEUBIBERG - GERMANY

PROJECT:	PSoC 62S2 Wi-Fi Bluetooth prototyping kit		
DRAWN BY:	PRAO		
LAYER:	TOP SIDE		
DWG NO:	610-60650-01	REV: 02	DATE: 03/21/23

ART FILM – BOTTOM

Infineon Technologies AG Am Campeon 1-15 85579 NEUBIBERG - GERMANY	PROJECT: PSoC 6252 Wi-Fi Bluetooth prototyping kit		
	DRAWN BY: PRAO		
	LAYER: BOTTOM SIDE		
	DWG NO: 610-60650-01	REV: 02	DATE: 03\21\23

ART FILM – BOTTOM

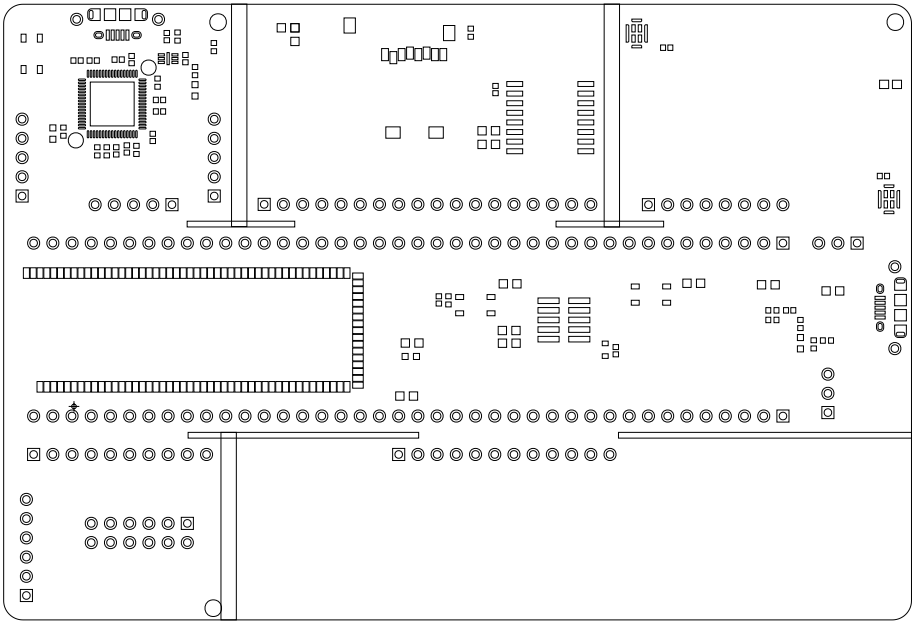

Infineon Technologies AG
Am Campeon 1-15
85579 NEUBIBERG - GERMANY

PROJECT:	PSoC 62S2 Wi-Fi Bluetooth prototyping kit		
DRAWN BY:	PRAO		
LAYER:	SOLDERMASK TOP		
DWG NO:	610-60650-01	REV: 02	DATE: 03/21/23

Infineon Technologies AG
Am Campeon 1-15
85579 NEUBIBERG - GERMANY

PROJECT:	PSoC 6252 Wi-Fi Bluetooth prototyping kit
DRAWN BY:	PRAO
LAYER:	SOLDERMASK BOTTOM
DWG NO:	610-60650-01
REV:	02
DATE:	03/21/23

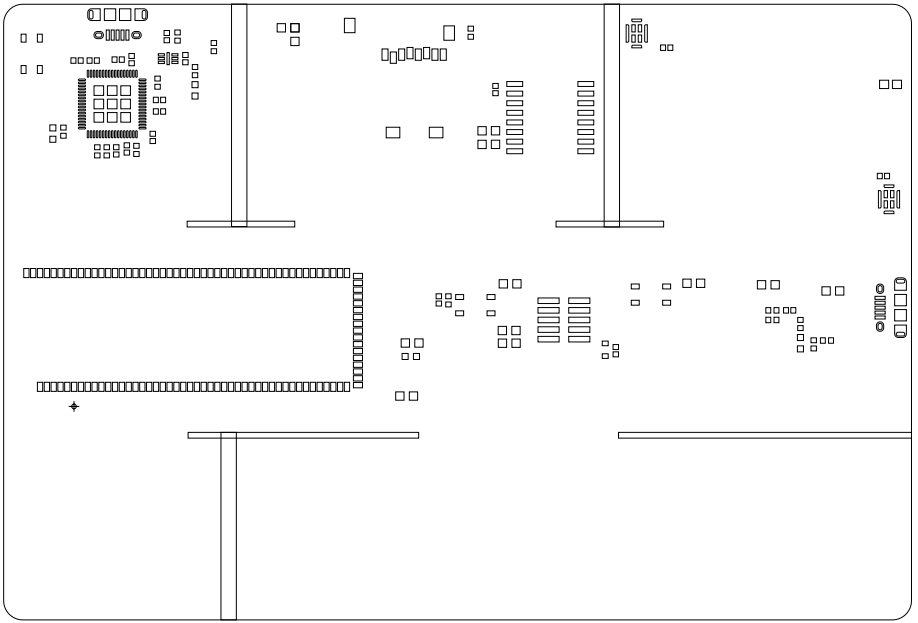

Infineon Technologies AG
Am Campeon 1-15
85579 NEUBIBERG - GERMANY

PROJECT:	PSoC 62S2 Wi-Fi Bluetooth prototyping kit		
DRAWN BY:	PRAO		
LAYER:	SOLDERPASTE TOP		
DWG NO:	610-60650-01	REV: 02	DATE: 03/21/23

PROJECT: PSoC 6252 Wi-Fi Bluetooth prototyping kit			Infineon Technologies AG Am Campeon 1-15 85579 NEUBIBERG - GERMANY
DRAWN BY: PRAO			
LAYER: SOLDERPASTE BOTTOM			
DWG NO: 610-60650-01	REV: 02	DATE: 03\21\23	

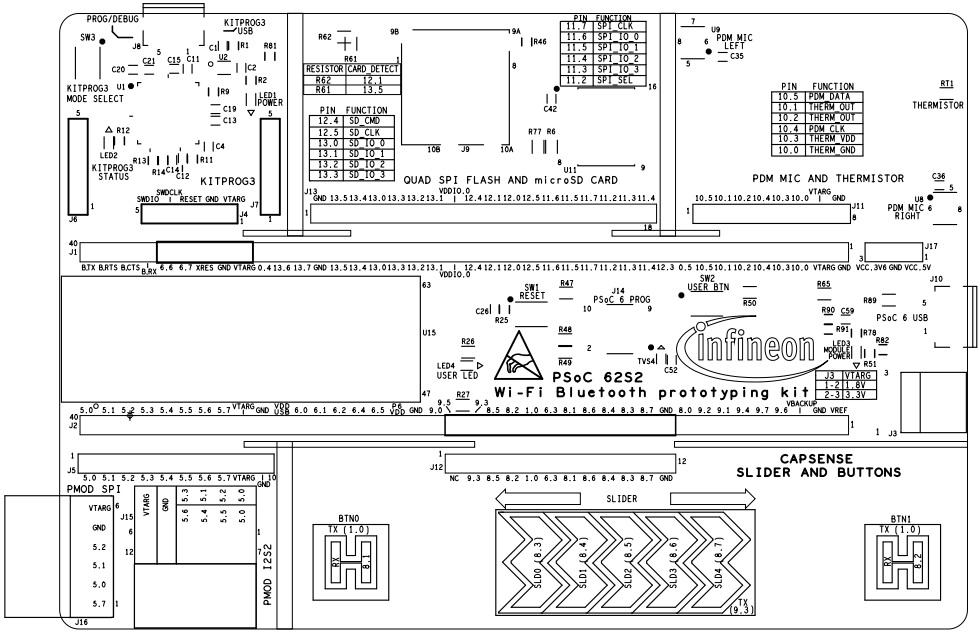

Infineon Technologies AG
Am Campeon 1-15
85579 NEUBIBERG - GERMANY

PROJECT:	PSoC 62S2 Wi-Fi Bluetooth prototyping kit		
DRAWN BY:	PRAO		
LAYER:	SILKSCREEN TOP		
DWG NO:	610-60650-01	REV: 02	DATE: 03/21/23

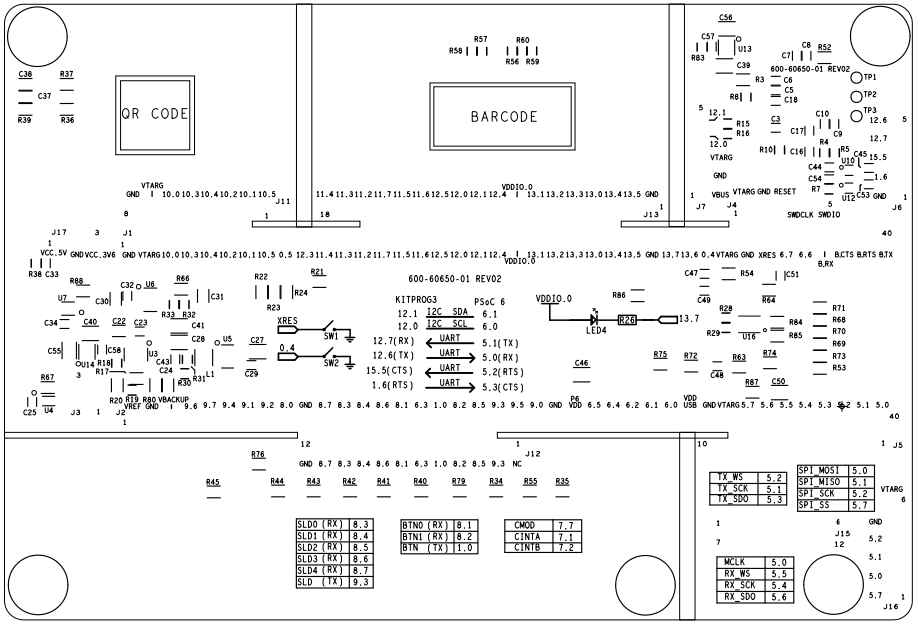

PROJECT: PSoC 6S2 Wi-Fi Bluetooth prototyping kit			
DRAWN BY: PRAO			
LAYER: SILKSCREEN BOTTOM			
DWG NO: 610-60650-01	REV: 02	DATE: 03\21\23	

Infineon Technologies AG
Am Campeon 1-15
85579 NEUBIBERG - GERMANY