CY8CPROTO-041TP PSOC™ 4100T Plus CAPSENSE™ Prototyping Kit

CONTENTS

PAGE	DESCRIPTION
01	Title, Table of Contents & Drawing Numbers
02	Functional Block Diagram
03	Power Supply Block Diagram
04	USB Interface and Power Supply
05	KitProg3 Interface
06	PSOC™ 4100T Plus Device Interface
07	Capacitive sensor's and onboard Peripherals
08	Accessories
09	Revision History

Drawing Numbers

PCBA	121-60708-01
PCB	600-60708-01
FAB DRW	610-60708-01
ASSY DRW	620-60708-01
SCH DRW	630-60708-01

Legal Disclaimer :
The information given in this document shall in no event be regarded as a guarantee of conditions or characteristics. With respect to any examples or hints given herein, any typical values stated herein and/or any information regarding the application of the device, Infineon Technologies hereby disclaims any and all warranties and liabilities of any kind, including without limitation, warranties of non-infringement of intellectual property rights of any third party.

SCH Title : PSOC™ 4100T Plus CAPSENSE™ Prototyping Kit

Page Title: Title Page

Size	Document Number	Drawn By	Approved By	Rev
A4	630-60708-01	Vamsi	Ronak	04

Date: Wednesday, December 11, 2024 Sheet 1 of 9

Functional Block Diagram

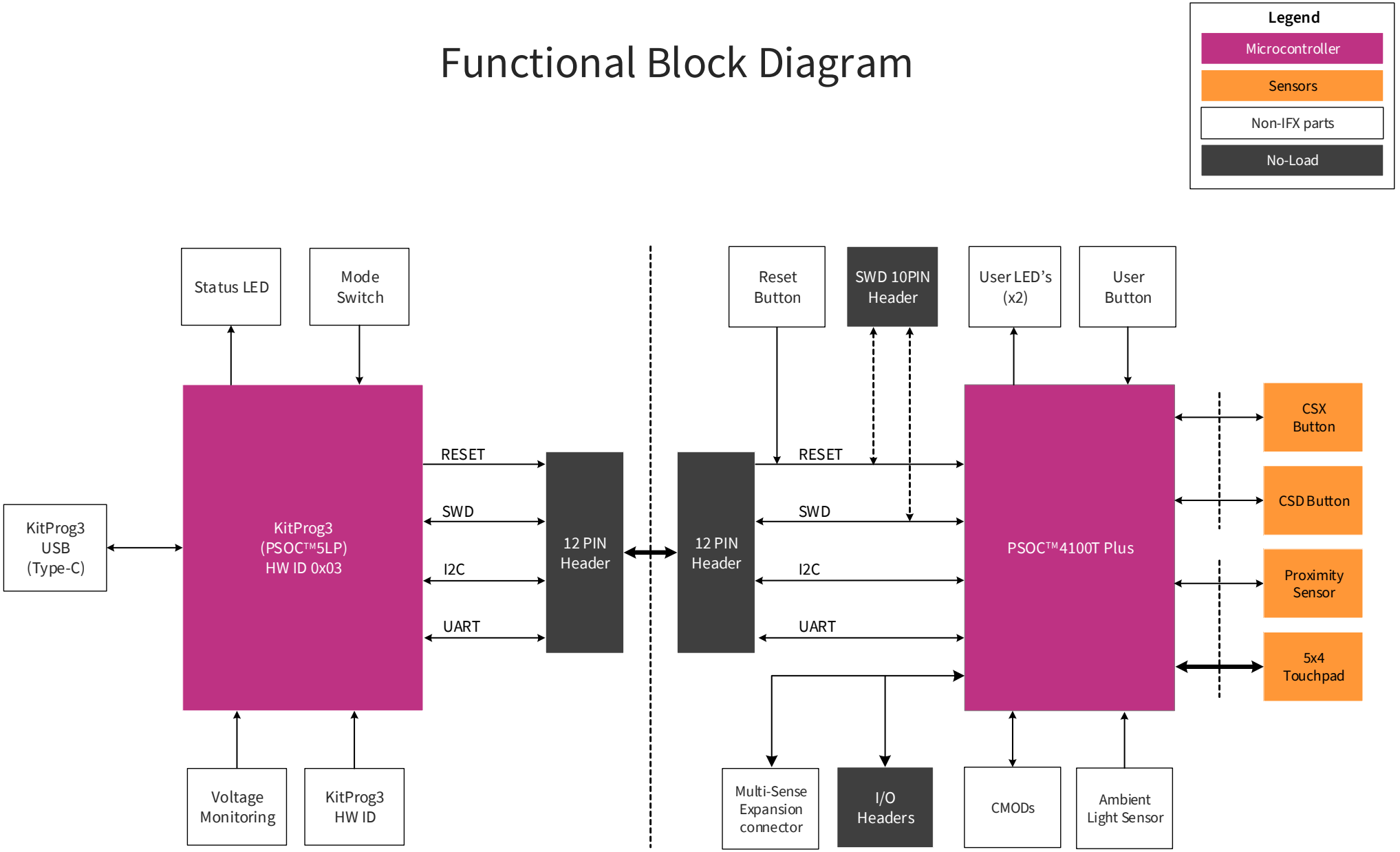

Legal Disclaimer :
The information given in this document shall in no event be regarded as a guarantee of conditions or characteristics. With respect to any examples or hints given herein, any typical values stated herein and/or any information regarding the application of the device, Infineon Technologies hereby disclaims any and all warranties and liabilities of any kind, including without limitation, warranties of non-infringement of intellectual property rights of any third party.

SCH Title : PSOC™ 4100T Plus CAPSENSE™ Prototyping Kit

Page Title: Functional Block Diagram

Size	Document Number	Drawn By	Approved By	Rev
A4	630-60708-01	Vamsi	Ronak	04

Date: Wednesday, December 11, 2024 Sheet 2 of 9

Power Block Diagram

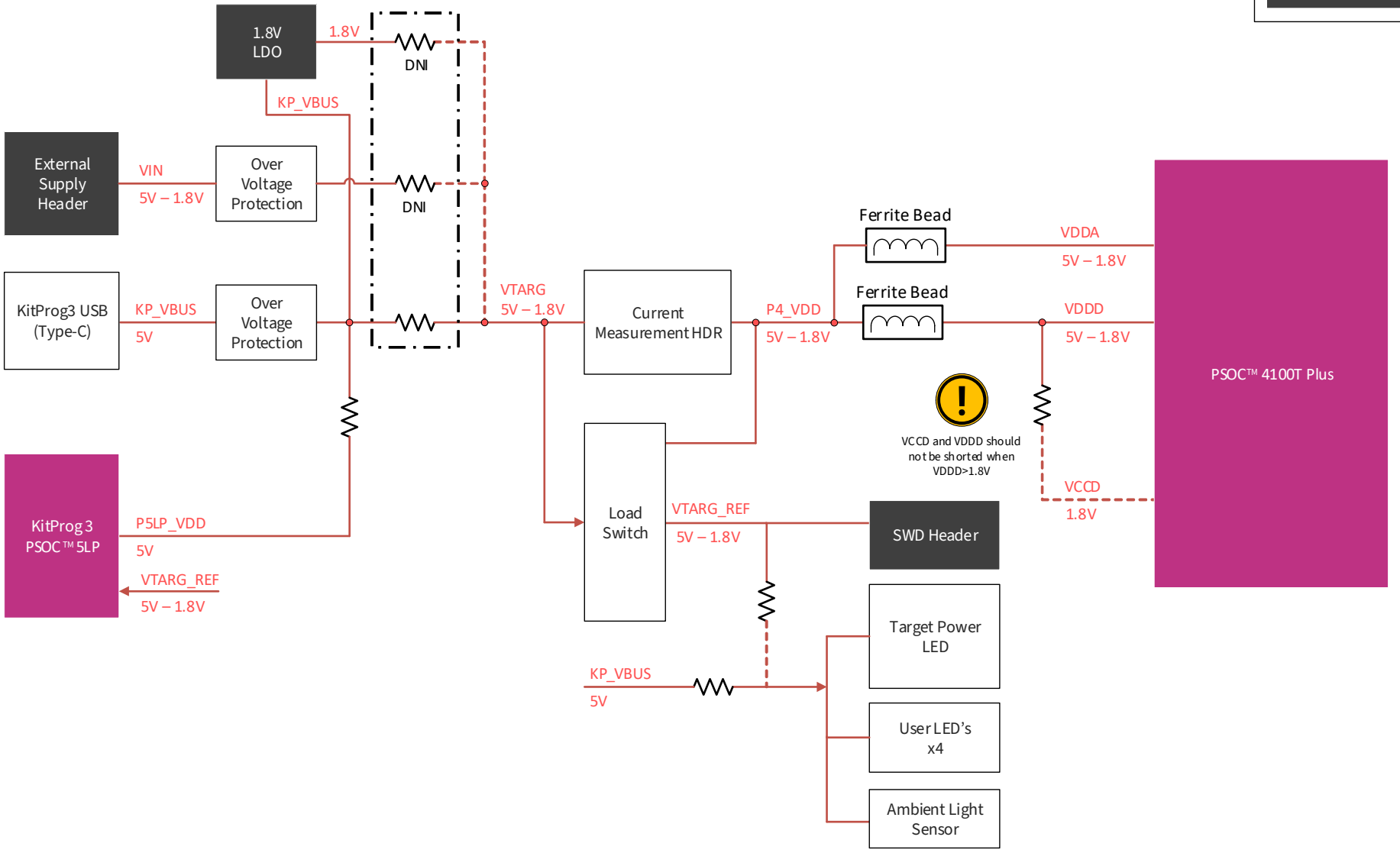

Legal Disclaimer :
The information given in this document shall in no event be regarded as a guarantee of conditions or characteristics. With respect to any examples or hints given herein, any typical values stated herein and/or any information regarding the application of the device, Infineon Technologies hereby disclaims any and all warranties and liabilities of any kind, including without limitation, warranties of non-infringement of intellectual property rights of any third party.

SCH Title :	**PSOC™ 4100T Plus CAPSENSE™ Prototyping Kit**			
Page Title:	**Power supply Block Diagram**			
Size	Document Number	Drawn By	Approved By	Rev
A4	**630-60708-01**	**Vamsi**	**Ronak**	**04**
Date:	Wednesday, December 11, 2024	Sheet	**3** of **9**	

USB Power Supply and Interface

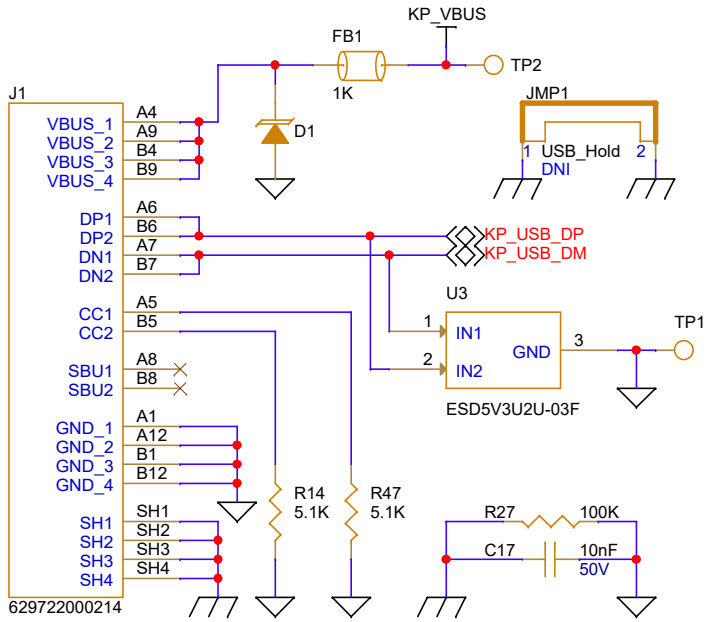

VTARG Reference Voltage (1.8V to 5V based on VTARG)

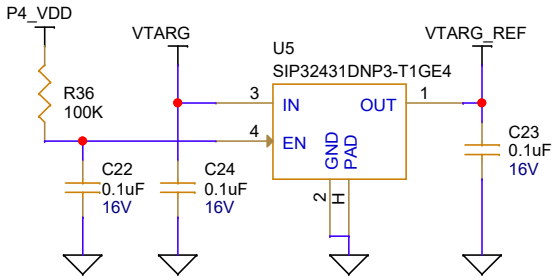

Voltage supply for Peripherals

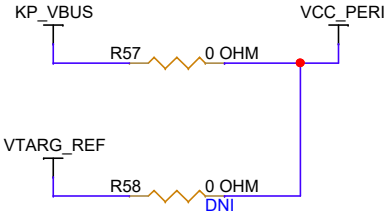

Note:
Unmount the R57 and mount R58 to select VTARG_REF as peripheral supply voltage

1.8V Voltage regulator

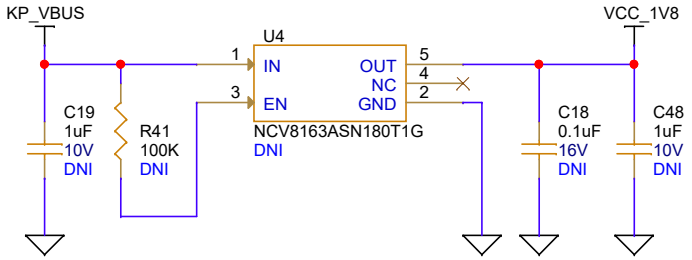

Power LED

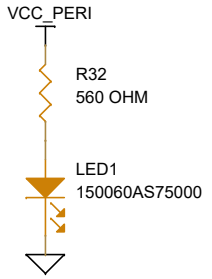

Target Voltage Supply

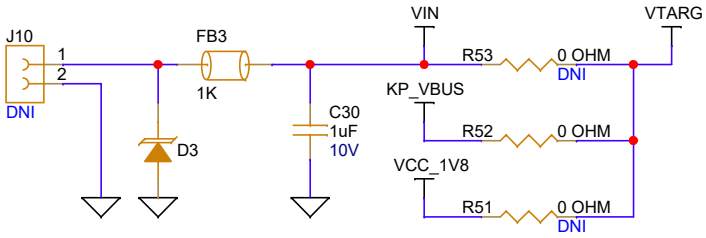

Note:
External supply should be minimum of 1.8V to maximum of 5V. For external supply of 1.8V, populate resistor R67 to short VDDD and VCCD

Note:
1. Unmount the R52 and mount R53 to select external supply as Target voltage

2. Unmount the R52 and mount R51 to select 1.8V supply from onboard LDO as Target voltage

Current Measurement Header

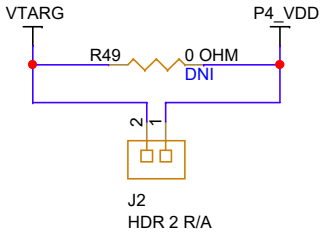

Note:
This header is used for mesuring current consumed by the PSoC™ 4100T Plus MCU

Legal Disclaimer :
The information given in this document shall in no event be regarded as a guarantee of conditions or characteristics. With respect to any examples or hints given herein, any typical values stated herein and/or any information regarding the application of the device, Infineon Technologies hereby disclaims any and all warranties and liabilities of any kind, including without limitation, warranties of non-infringement of intellectual property rights of any third party.

SCH Title : PSOC™ 4100T Plus CAPSENSE™ Prototyping Kit

Page Title: USB Interface and Power Supply

Size	Document Number	Drawn By	Approved By	Rev
A4	630-60708-01	Vamsi	Ronak	04

Date: Wednesday, December 18, 2024 Sheet 4 of 9

PSOC™ 5LP based KitProg3

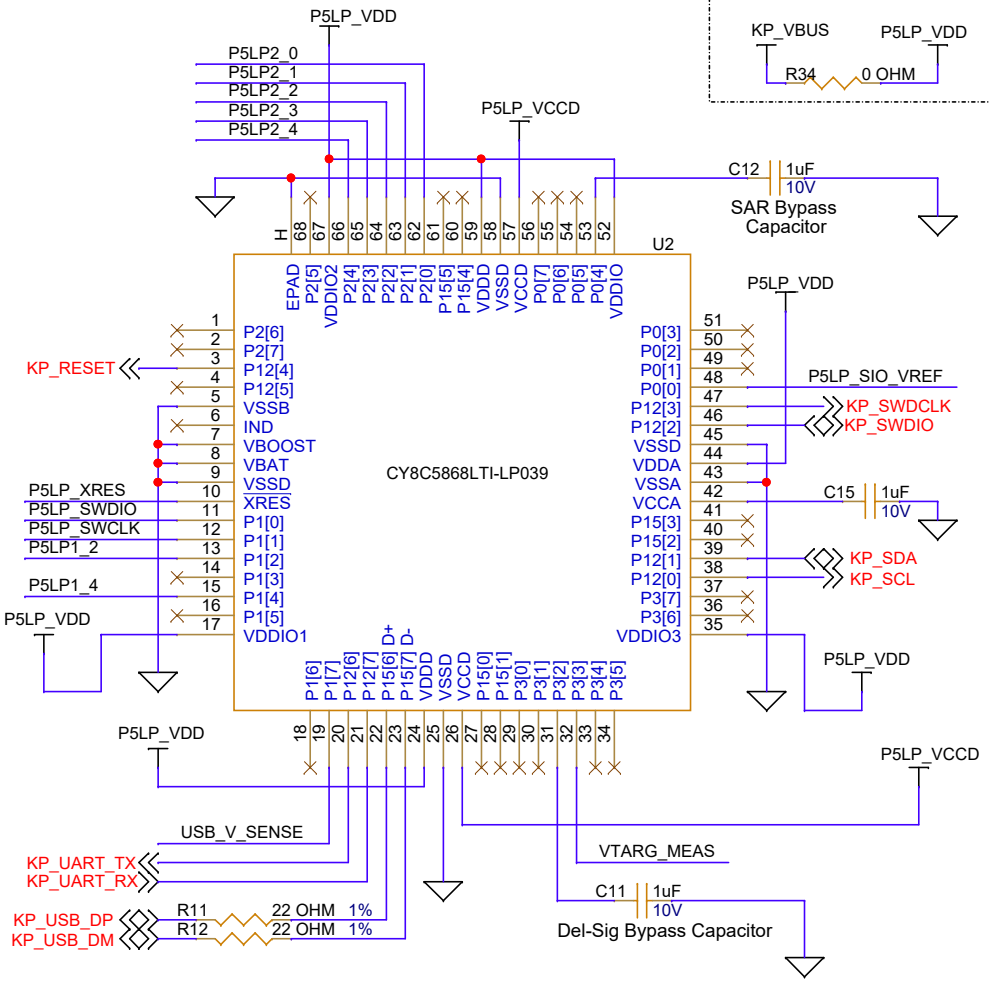

PSOC™ 5LP Power

Decoupling Capacitors

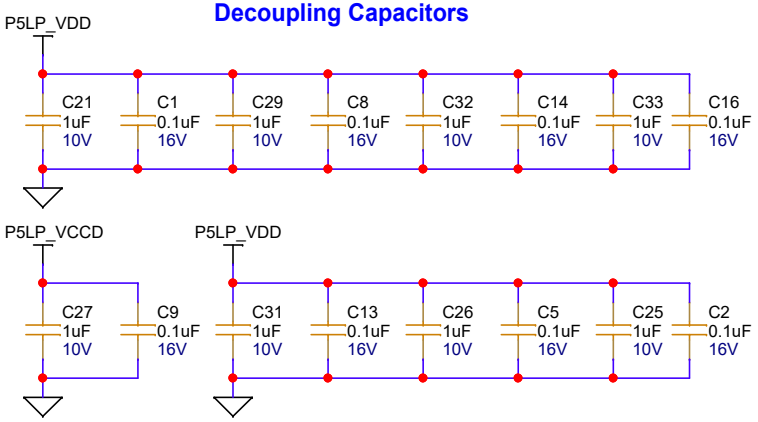

Voltage Monitoring

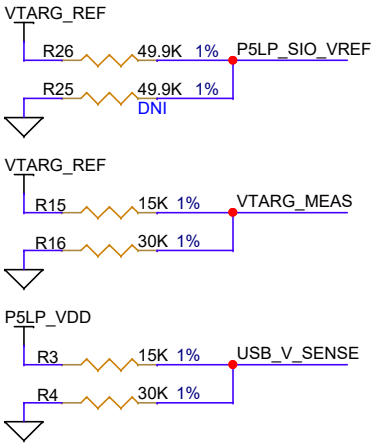

PSOC™ 5LP Programming Header

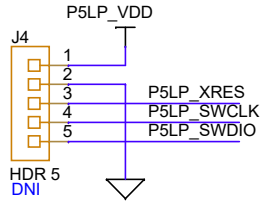

Note:
This is used for programing on board PSoC5LP with KitProg3 firmware

KitProg3 breakout header

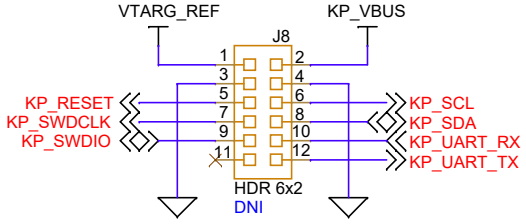

KitProg3 H/W Revision

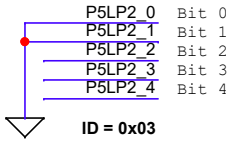

ID = 0x03

Note:
GND is read as binary "1" and floating as "0"

KitProg3 Mode Switch

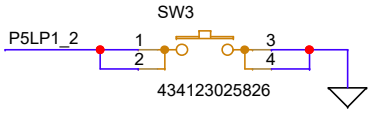

KitProg3 Status LED

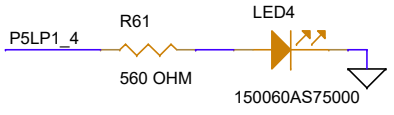

KitProg3 UART RX Pull Up

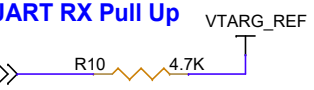

Legal Disclaimer :
The information given in this document shall in no event be regarded as a guarantee of conditions or characteristics. With respect to any examples or hints given herein, any typical values stated herein and/or any information regarding the application of the device, Infineon Technologies hereby disclaims any and all warranties and liabilities of any kind, including without limitation, warranties of non-infringement of intellectual property rights of any third party.

SCH Title : **PSOC™ 4100T Plus CAPSENSE™ Prototyping Kit**

Page Title: **KitProg3 Interface**

Size	Document Number	Drawn By	Approved By	Rev
A4	630-60708-01	Vamsi	Ronak	04

Date: Wednesday, December 18, 2024 Sheet 5 of 9

PSOC™ 4100T Plus Device I/O's

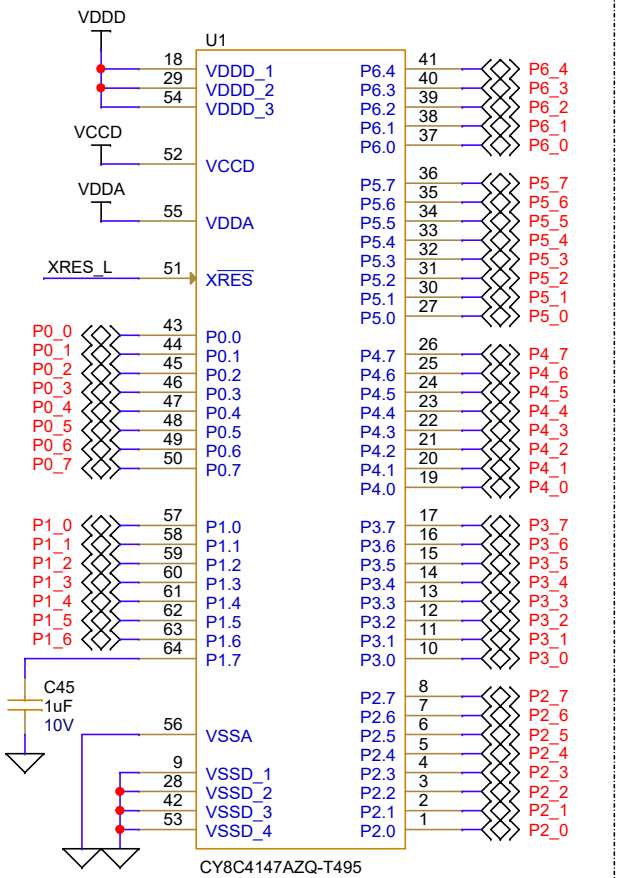

PSOC™ 4100T Plus Device Power

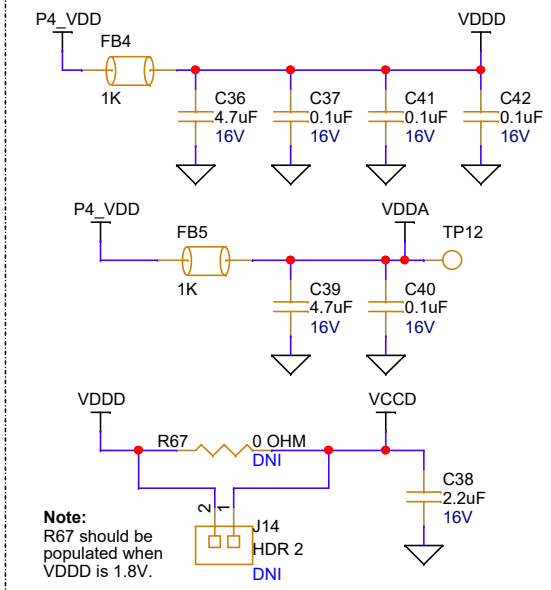

KitProg3 I2C Interface

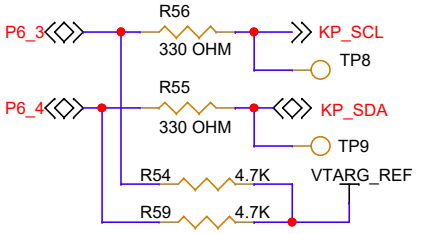

KitProg3 UART Interface

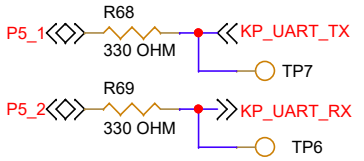

PSOC™ 4100T Plus Device I/O breakout header

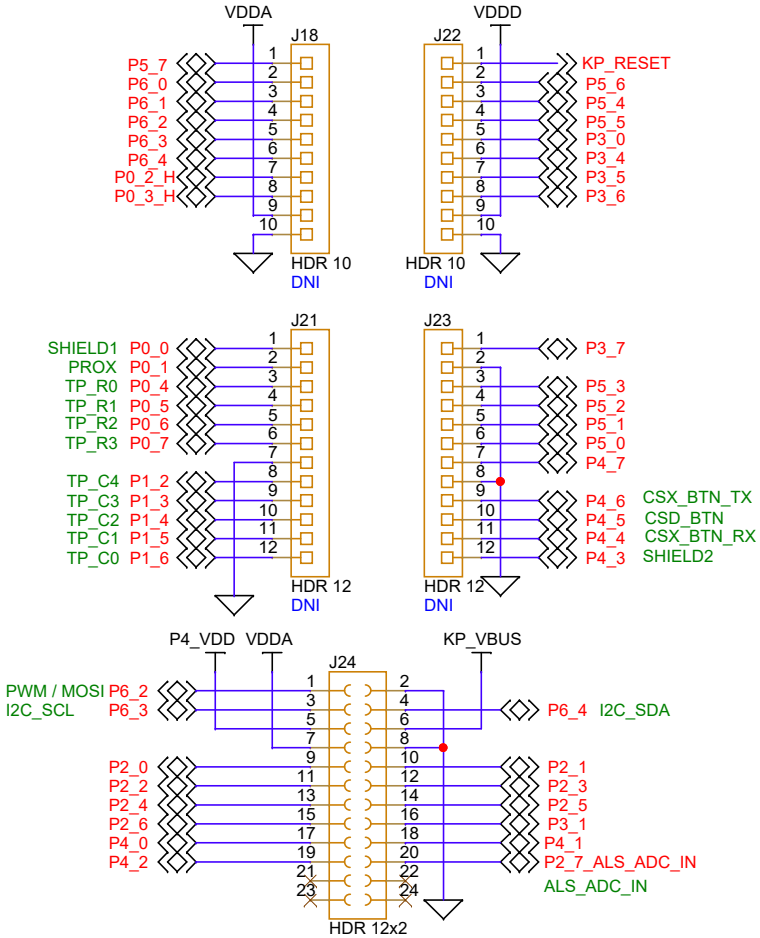

PSOC™ 4100T Plus Device breakout header

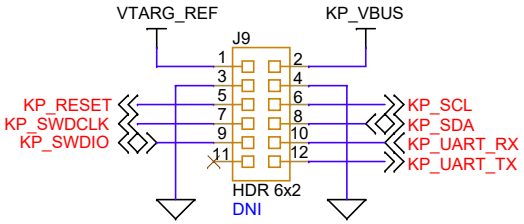

PSOC™ 4100T Plus Device SWD interface

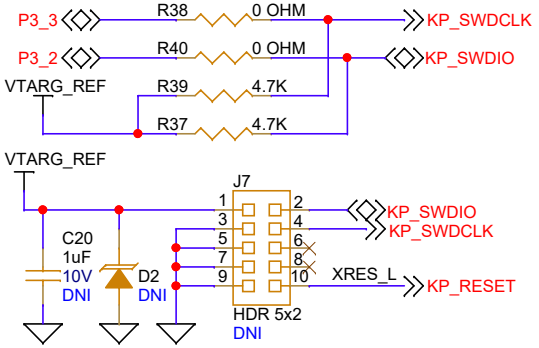

Reset Button

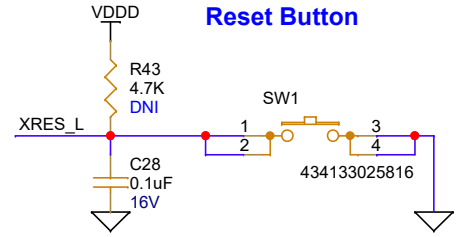

Legal Disclaimer :
The information given in this document shall in no event be regarded as a guarantee of conditions or characteristics. With respect to any examples or hints given herein, any typical values stated herein and/or any information regarding the application of the device, Infineon Technologies hereby disclaims any and all warranties and liabilities of any kind, including without limitation, warranties of non-infringement of intellectual property rights of any third party.

SCH Title : PSOC™ 4100T Plus CAPSENSE™ Prototyping Kit				
Page Title: PSoC™ 4100T Plus Device Interface				
Size	Document Number	Drawn By	Approved By	Rev
A4	630-60708-01	Vamsi	Ronak	04
Date:	Wednesday, December 11, 2024	Sheet	6 of 9	

CAPSENSE™ Shield

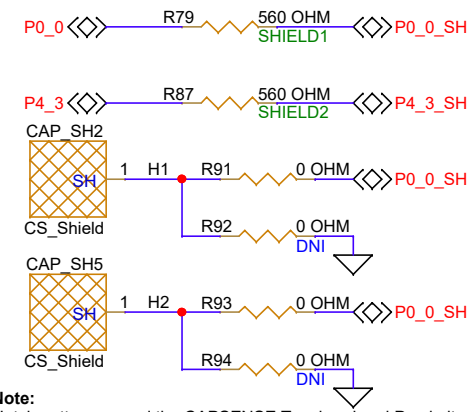

Note:
Hatch pattern around the CAPSENSE Touchpad and Proximity sensor on top and bottom of PCB and connected to IO supported to connect the hatch to driven shield or ground.

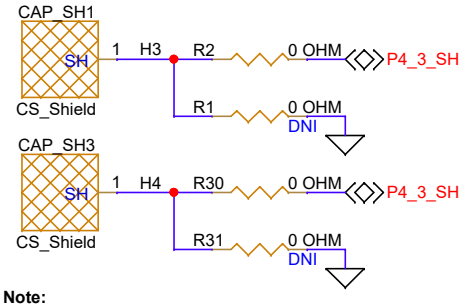

Note:
Hatch pattern around the CAPSENSE Button on top and bottom plain of PCB and connected to driven shield by default as R2, and R30 are mounted. if both hatches to be connected to GND mount R1 and R31.

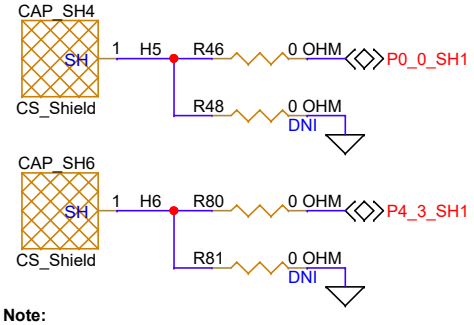

Note:
Hatch pattern around the CAPSENSE sensor lines on main PCB and connected to driven shield by default as R46 is mounted. if this hatch to be connected to GND mount R48.

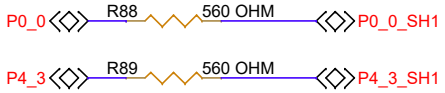

CAPSENSE™ 4x5 TouchPad

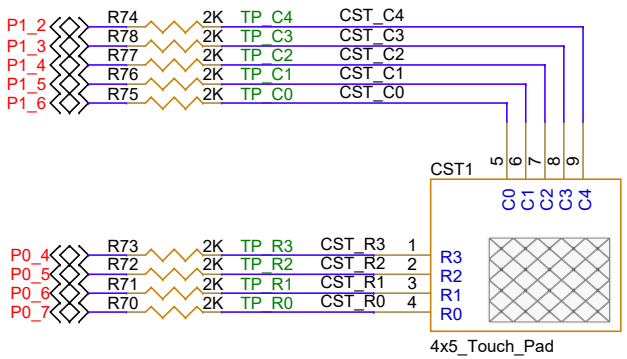

CAPSENSE™ CSX Button

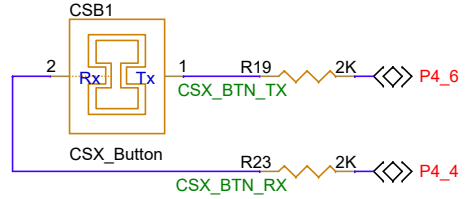

CAPSENSE™ CSD Button

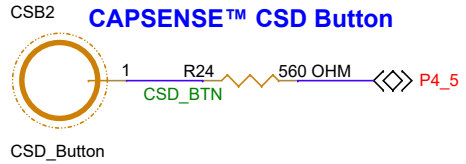

CAPSENSE™ Proximity Sensor

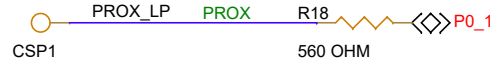

CMOD Capacitors

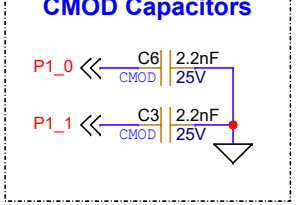

User Button

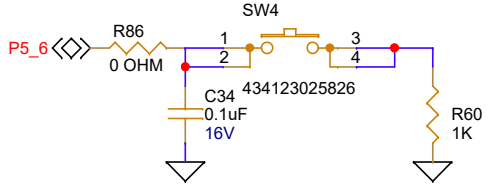

Ambient Light Sensor

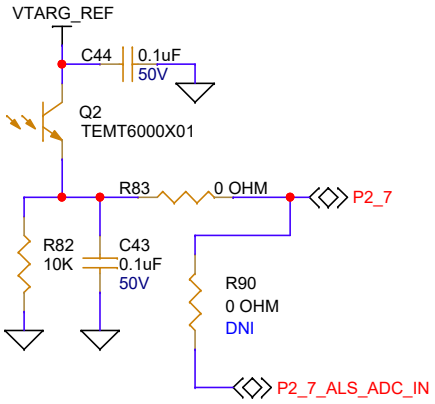

CAPSENSE™ I/O breakout header

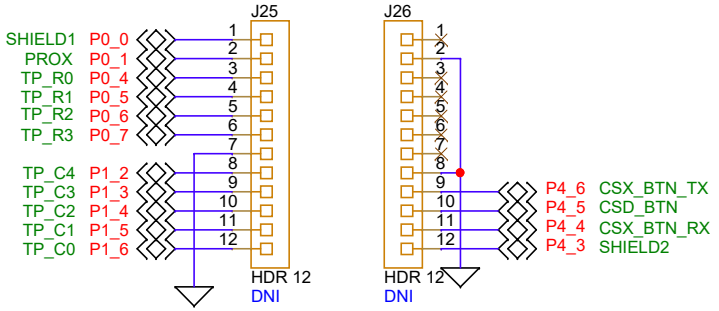

Legal Disclaimer :
The information given in this document shall in no event be regarded as a guarantee of conditions or characteristics. With respect to any examples or hints given herein, any typical values stated herein and/or any information regarding the application of the device, Infineon Technologies hereby disclaims any and all warranties and liabilities of any kind, including without limitation, warranties of non-infringement of intellectual property rights of any third party.

SCH Title : PSOC™ 4100T Plus CAPSENSE™ Prototyping Kit				
Page Title: Capacitive sensor's and onboard Peripherals				
Size	Document Number	Drawn By	Approved By	Rev
A4	630-60708-01	Vamsi	Ronak	04
Date:	Wednesday, December 11, 2024	Sheet	7 of 9	

Accessories

Jumper Shunt

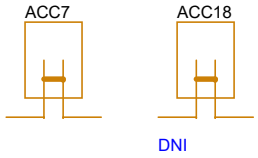

QR Code Label



PCBA Label



WCO

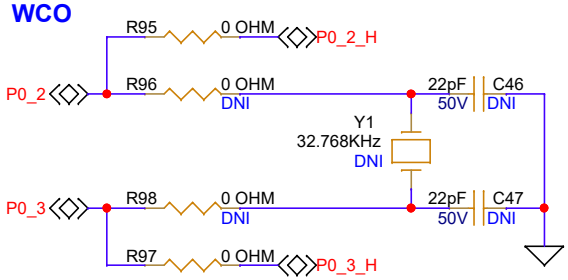

CAPSENSE Overlay's

ACC15

CapSense Overlay

Overlay Material: Acrylic
Overlay Thickness: 1mm
Overlay Dimensions: 34mm x 46mm

ACC16

CapSense Overlay

Overlay Material: Acrylic
Overlay Thickness: 4mm
Overlay Dimensions: 34mm x 46mm

ACC17

CapSense Overlay

Overlay Material: Acrylic
Overlay Thickness: 3mm
Overlay Dimensions: 34mm x 46mm

User LED's

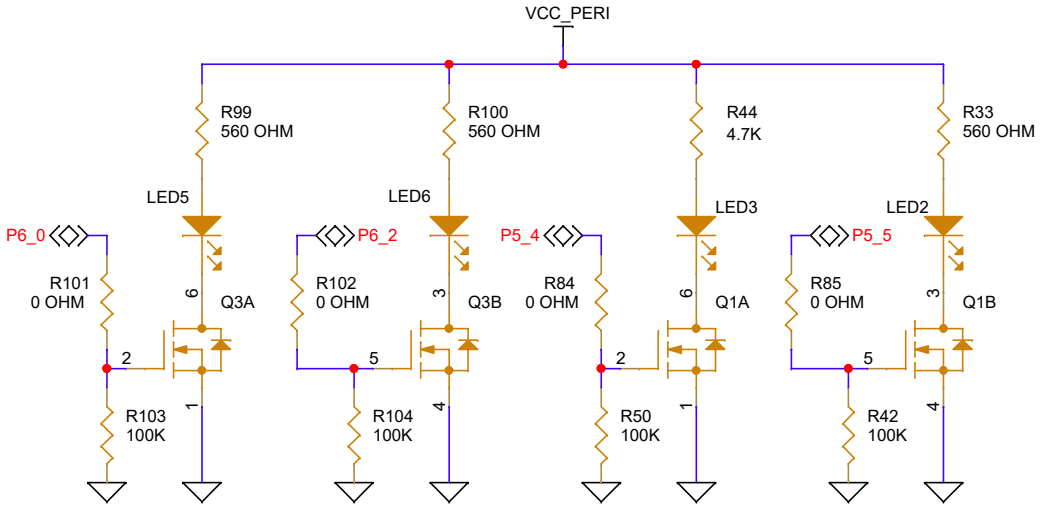

Bumpons

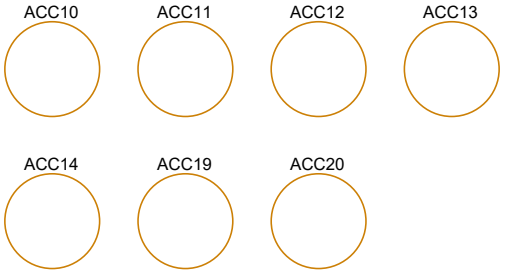

Legal Disclaimer :
The information given in this document shall in no event be regarded as a guarantee of conditions or characteristics. With respect to any examples or hints given herein, any typical values stated herein and/or any information regarding the application of the device, Infineon Technologies hereby disclaims any and all warranties and liabilities of any kind, including without limitation, warranties of non-infringement of intellectual property rights of any third party.

SCH Title : PSOC™ 4100T Plus CAPSENSE™ Prototyping Kit

Page Title: On-board Peripherals and Accessories

Size	Document Number	Drawn By	Approved By	Rev
A4	630-60708-01	Vamsi	Ronak	04

Date: Wednesday, December 11, 2024 Sheet 8 of 9

REVISION HISTORY

REV	DESCRIPTION OF CHANGE	DATE
0.01	Initial Draft	13/03/2024
0.02	updated the hatch net alias	13/03/2024
0.03	updated the SWD interface pins, CAPSENSE shield configurations and CAPSENSE IO configurations	13/03/2024
0.04	updated the PSoC4100T device pin assignments, updated the I2C interface pins, and update UART interface pins	03/04/2024
0.05	Updated pin assignments for expansion headers and sensors	03/04/2024
0.06	Updated pin assignments for expansion headers and sensors	03/04/2024
0.07	added WCO, decap's package size updated, Self cap button size updated and updated pin assignemtn	25/04/2024
0.08	Updated the pin assignment for the sensor headers	02/05/2024
0.09	Updated header to SMD for VCCD and VDDD short	02/05/2024
0.10	Updated header pinouts	06/05/2024
0.11	Updated expansion header footprint & pin assignment for ambient sensor	07/05/2024
0.12	Updated 2pin header for proximity sensor	15/05/2024
0.13	updated with BDRB comments	20/05/2024
0.14	Hatch connection updated to H2	20/05/2024
0.15	R90 updated as DNI	21/05/2024
01	REV 01 Release	31/05/2024
1.16	updated the I2C, UART pin assignments and added pull ups provision for SWD interface	01/07/2024
1.17	Updated TCPWM pin assignment in extension header interface.	02/07/2024
1.18	Updated the reset switch part number	09/07/2024
1.19	Updated the VDD to P4_VDD on the extension header for reducing the current leakage from extension boards	09/07/2024
02	Second release of hardware	12/07/2024
2.20	update SWD header and touchpad pin assignments, LED5 & LED6 updated with blue and white color	12/07/2024
03	REV 03 Release	14/11/2024
3.01	Updated with wurth alternates	14/12/2024
04	REV 04 Release	11/12/2024

Legal Disclaimer :
The information given in this document shall in no event be regarded as a guarantee of conditions or characteristics. With respect to any examples or hints given herein, any typical values stated herein and/or any information regarding the application of the device, Infineon Technologies hereby disclaims any and all warranties and liabilities of any kind, including without limitation, warranties of non-infringement of intellectual property rights of any third party.