Inductive Keypad - 4 expansion board

CONTENTS

PAGE	DESCRIPTION
01	Title, Table of Contents & Drawing Numbers
02	Inductive coils and LED's
03	Accessories
04	Revision History

Drawing Numbers

PCBA	121-60724-01
PCB	600-60724-01
FAB DRW	610-60724-01
ASSY DRW	620-60724-01
SCH DRW	630-60724-01

Legal Disclaimer :
The information given in this document shall in no event be regarded as a guarantee of conditions or characteristics. With respect to any examples or hints given herein, any typical values stated herein and/or any information regarding the application of the device, Infineon Technologies hereby disclaims any and all warranties and liabilities of any kind, including without limitation, warranties of non-infringement of intellectual property rights of any third party.

SCH Title : Inductive Keypad - 4 expansion board				
Page Title: Title Page				
Size	Document Number	Drawn By	Approved By	Rev
A4	630-60724-01	Vamsi	Ronak	01
Date: Wednesday, August 14, 2024		Sheet 1 of 4		

Printed Inductive Sensors

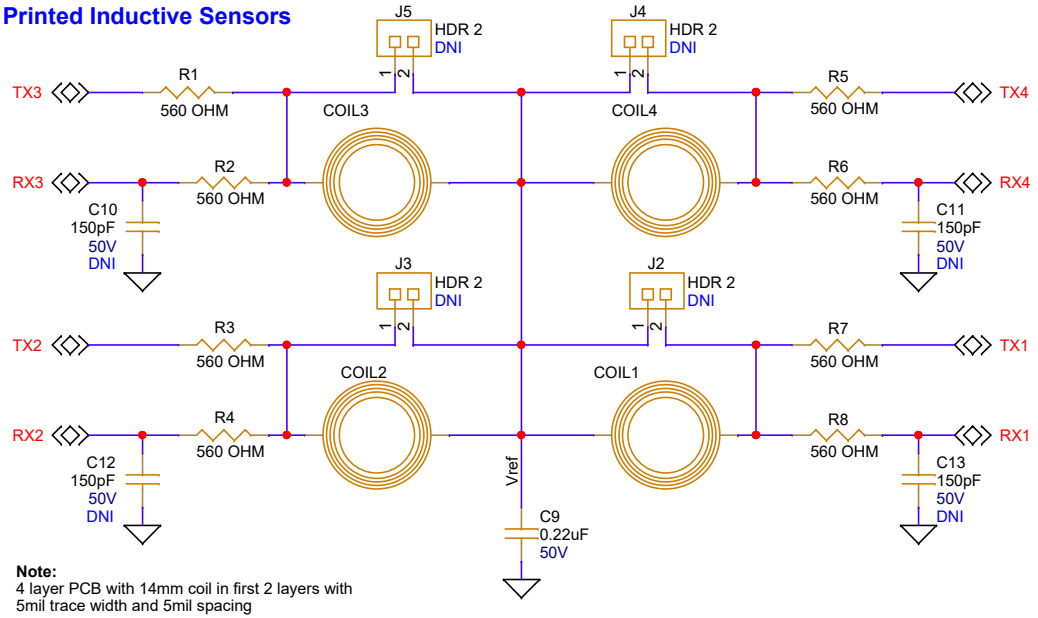

Note:
4 layer PCB with 14mm coil in first 2 layers with 5mil trace width and 5mil spacing

Expansion board Interface Header

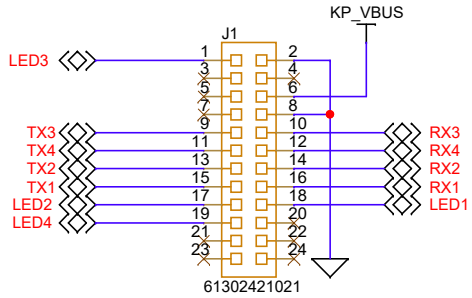

Ground ring

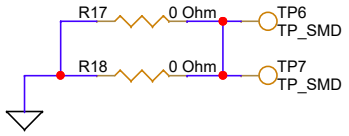

User LED's

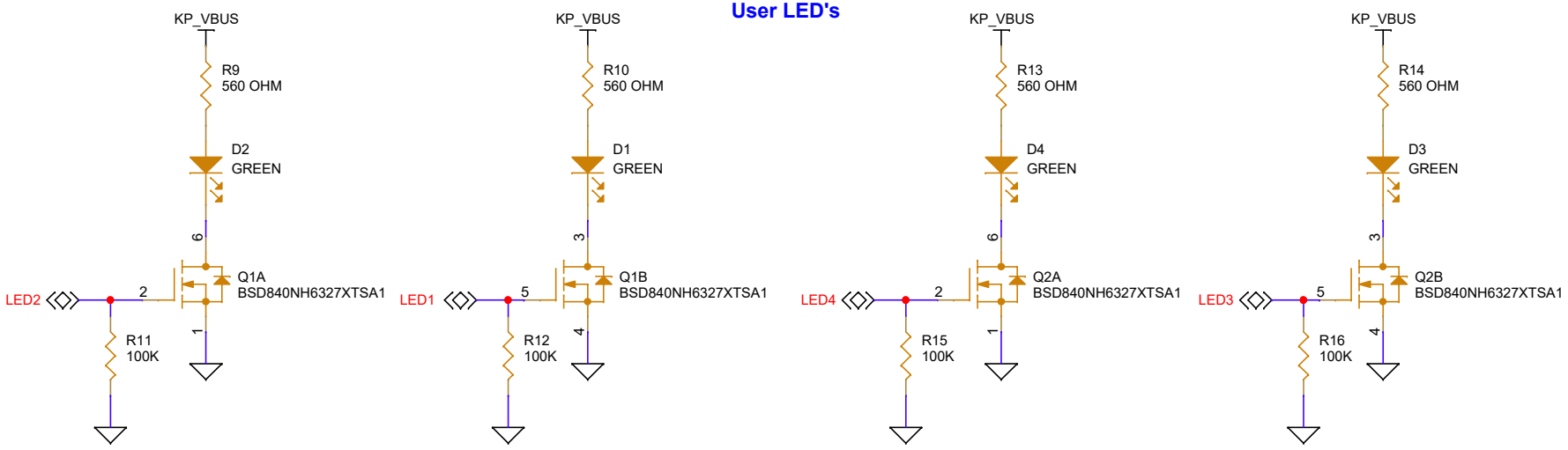

Legal Disclaimer :
The information given in this document shall in no event be regarded as a guarantee of conditions or characteristics. With respect to any examples or hints given herein, any typical values stated herein and/or any information regarding the application of the device, Infineon Technologies hereby disclaims any and all warranties and liabilities of any kind, including without limitation, warranties of non-infringement of intellectual property rights of any third party.

SCH Title : Inductive Keypad - 4 expansion board				
Page Title: Inductive coils and LED's				
Size	Document Number	Drawn By	Approved By	Rev
A4	630-60724-01	Vamsi	Ronak	01
Date: Wednesday, August 14, 2024		Sheet 2 of 4		

Accessories

Bumpons

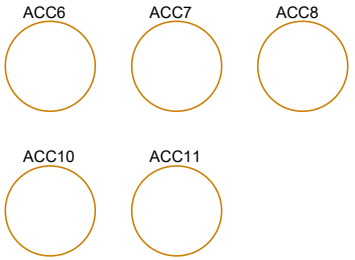

PCBA Label



SS Overlay

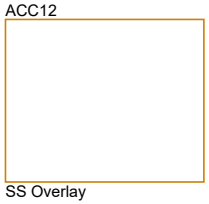

Overlay Material: SS
Overlay Thickness: 0.3mm
Air Gap: 0.3mm

Legal Disclaimer :
The information given in this document shall in no event be regarded as a guarantee of conditions or characteristics. With respect to any examples or hints given herein, any typical values stated herein and/or any information regarding the application of the device, Infineon Technologies hereby disclaims any and all warranties and liabilities of any kind, including without limitation, warranties of non-infringement of intellectual property rights of any third party.

SCH Title : Inductive Keypad - 4 expansion board				
Page Title: Accessories				
Size	Document Number	Drawn By	Approved By	Rev
A4	630-60724-01	Vamsi	Ronak	01
Date: Wednesday, August 14, 2024		Sheet 3 of 4		

REVISION HISTORY

REV	DESCRIPTION OF CHANGE	DATE
0.01	Initial draft	06-05-2024
0.02	updated with 14mm coil and bottom entry LED are updated	15-05-2024
0.03	Accessories are added	16-05-2024
0.04	Coil capacitors are removed and test points are added	22-05-2024
0.05	Connector pinout for LED pins are changed	29-05-2024
01	Initial release	05-07-2024

Legal Disclaimer :
The information given in this document shall in no event be regarded as a guarantee of conditions or characteristics. With respect to any examples or hints given herein, any typical values stated herein and/or any information regarding the application of the device, Infineon Technologies hereby disclaims any and all warranties and liabilities of any kind, including without limitation, warranties of non-infringement of intellectual property rights of any third party.

SCH Title : Inductive Keypad - 4 expansion board

Page Title: Revision History

Size	Document Number	Drawn By	Approved By	Rev
A4	630-60724-01	Vamsi	Ronak	01

Date: Wednesday, August 14, 2024 | Sheet 4 of 4