CAPSENSE Hover Touch Expansion Board

CONTENTS

PAGE	DESCRIPTION
01	Title, Table of Contents & Drawing Numbers
02	Hover Touch Buttons
03	LED for Hover Touch Buttons
04	Accessories
05	Revision History

Drawing Numbers

PCBA	121-60727-01
PCB	600-60727-01
FAB DRW	610-60727-01
ASSY DRW	620-60727-01
SCH DRW	630-60727-01

Legal Disclaimer :
The information given in this document shall in no event be regarded as a guarantee of conditions or characteristics. With respect to any examples or hints given herein, any typical values stated herein and/or any information regarding the application of the device, Infineon Technologies hereby disclaims any and all warranties and liabilities of any kind, including without limitation, warranties of non-infringement of intellectual property rights of any third party.

SCH Title : CAPSENSE Hover Touch Expansion Board				
Page Title: Title Page				
Size	Document Number	Drawn By	Approved By	Rev
A4	630-60727-01	VAKI	RKAD	01
Date: Monday, November 25, 2024		Sheet 1 of 5		

Hover Touch Buttons

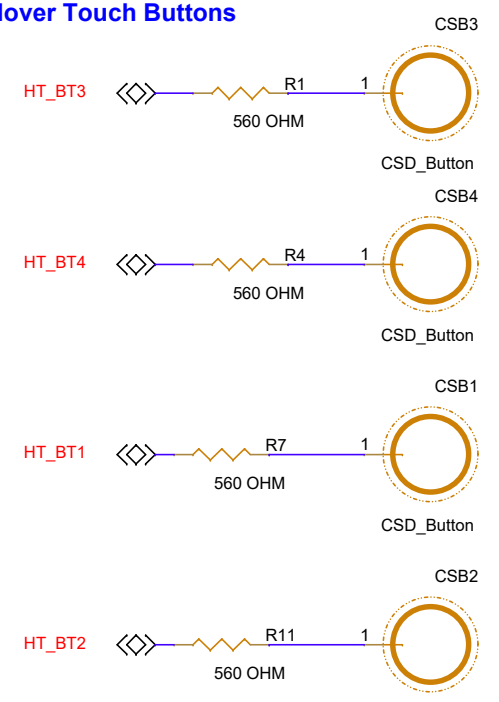

Note: 10mm spacing between buttons and LEDs need to be placed away from the buttons

Hatch configurations

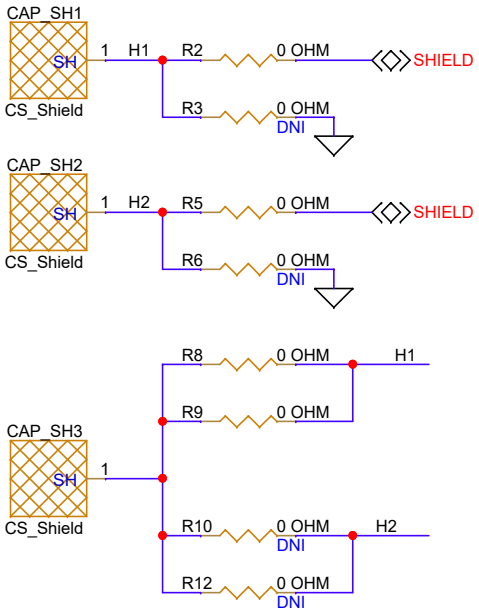

Extension board Interface Header

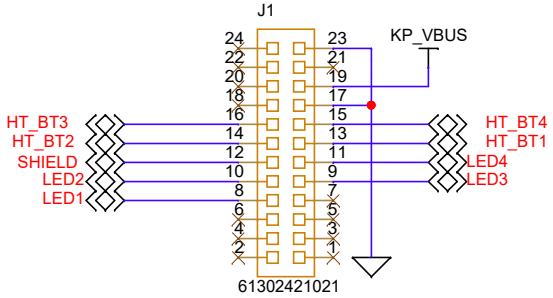

Legal Disclaimer :
The information given in this document shall in no event be regarded as a guarantee of conditions or characteristics. With respect to any examples or hints given herein, any typical values stated herein and/or any information regarding the application of the device, Infineon Technologies hereby disclaims any and all warranties and liabilities of any kind, including without limitation, warranties of non-infringement of intellectual property rights of any third party.

SCH Title :	**CAPSENSE Hover Touch Expansion Board**			
Page Title:	**Hover Touch Buttons**			
Size	Document Number	Drawn By	Approved By	Rev
A4	**630-60727-01**	**VAKI**	**RKAD**	**01**
Date:	Monday, November 25, 2024	Sheet	**2** of **5**	

LED for Hover Touch Buttons

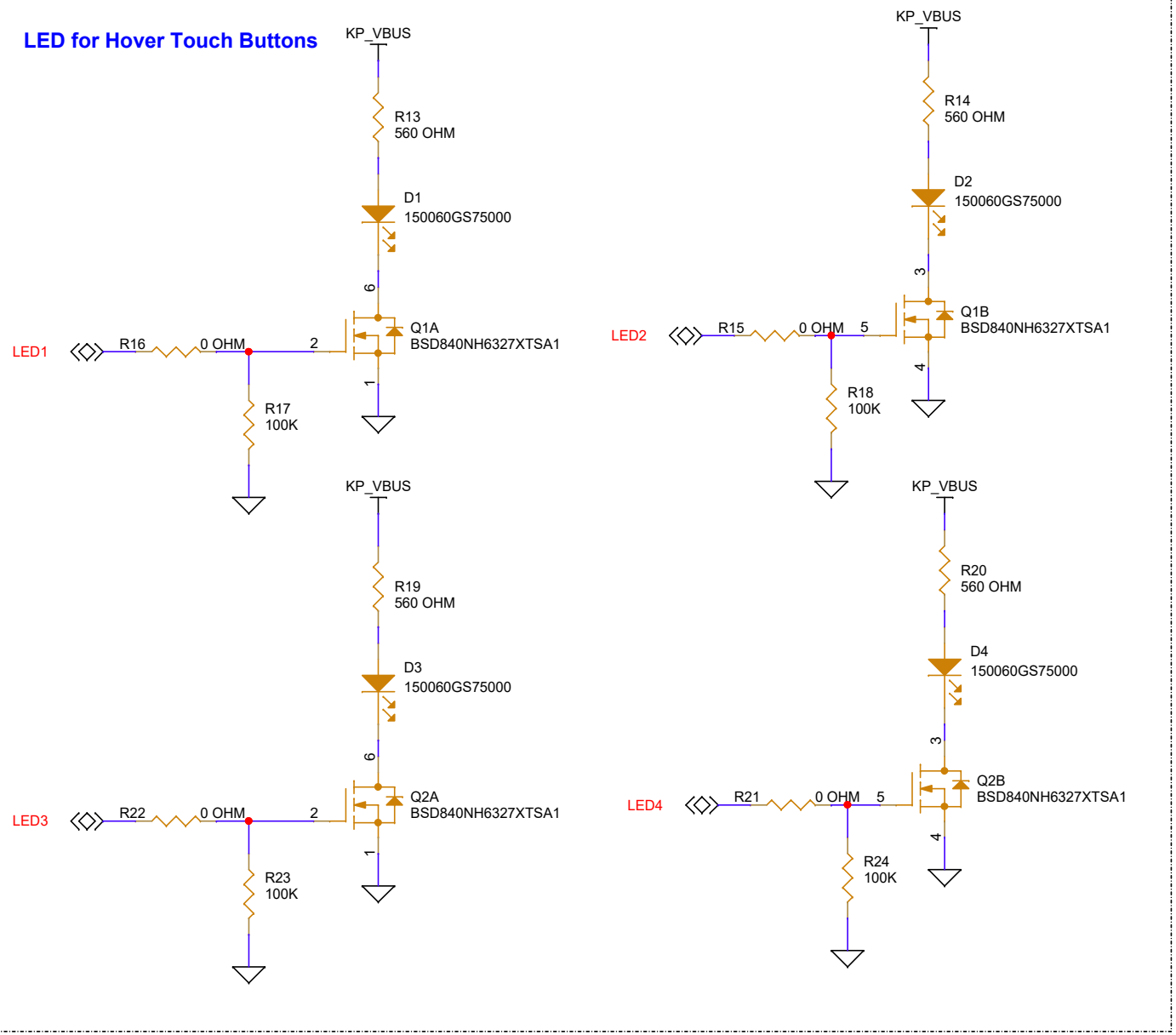

Legal Disclaimer :
The information given in this document shall in no event be regarded as a guarantee of conditions or characteristics. With respect to any examples or hints given herein, any typical values stated herein and/or any information regarding the application of the device, Infineon Technologies hereby disclaims any and all warranties and liabilities of any kind, including without limitation, warranties of non-infringement of intellectual property rights of any third party.

SCH Title :	**CAPSENSE Hover Touch Expansion Board**			
Page Title:	**LED for Hover Touch Buttons**			
Size	Document Number	Drawn By	Approved By	Rev
A4	**630-60727-01**	**VAKI**	**RKAD**	**01**
Date:	Monday, November 25, 2024	Sheet	**3** of **5**	

Accessories

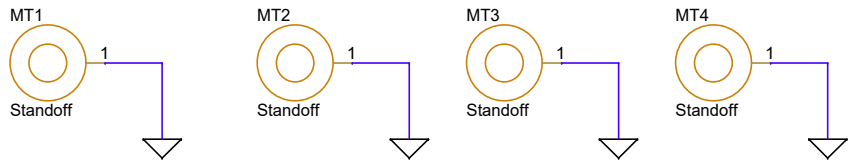

PCBA Label



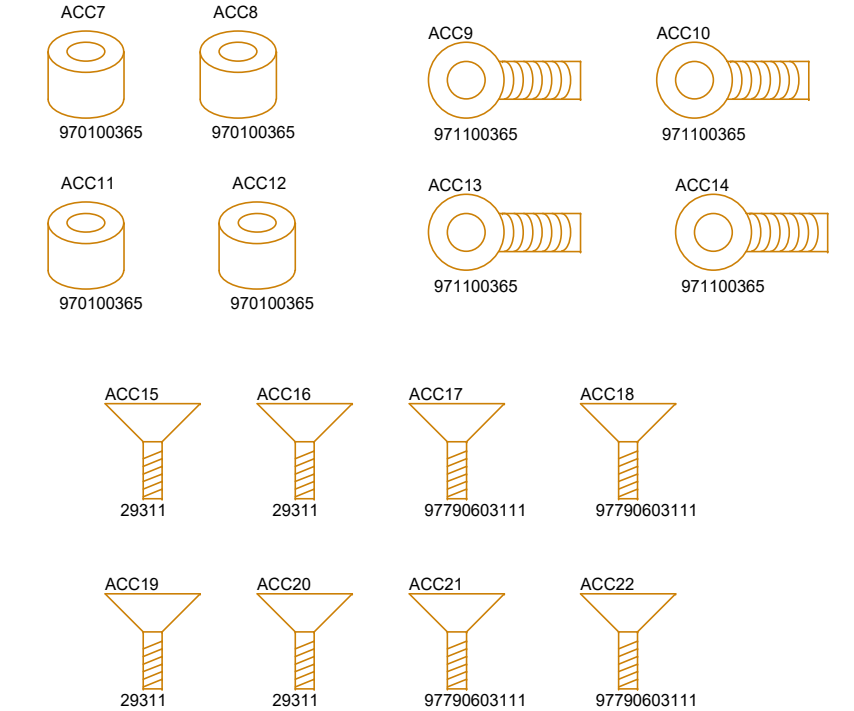

Legal Disclaimer :
The information given in this document shall in no event be regarded as a guarantee of conditions or characteristics. With respect to any examples or hints given herein, any typical values stated herein and/or any information regarding the application of the device, Infineon Technologies hereby disclaims any and all warranties and liabilities of any kind, including without limitation, warranties of non-infringement of intellectual property rights of any third party.

SCH Title :	**CAPSENSE Hover Touch Expansion Board**			
Page Title:	**Accessories**			
Size	Document Number	Drawn By	Approved By	Rev
A4	**630-60727-01**	**VAKI**	**RKAD**	**01**
Date:	Monday, November 25, 2024	Sheet	**4** of **5**	

REVISION HISTORY

REV	DESCRIPTION OF CHANGE	DATE
01	Initial release	25-11-2024

Legal Disclaimer :
The information given in this document shall in no event be regarded as a guarantee of conditions or characteristics. With respect to any examples or hints given herein, any typical values stated herein and/or any information regarding the application of the device, Infineon Technologies hereby disclaims any and all warranties and liabilities of any kind, including without limitation, warranties of non-infringement of intellectual property rights of any third party.

SCH Title : CAPSENSE Hover Touch Expansion Board

Page Title: Revision History

Size	Document Number	Drawn By	Approved By	Rev
A4	630-60727-01	VAKI	RKAD	01

Date: Monday, November 25, 2024 Sheet 5 of 5