ART FILM - TOP

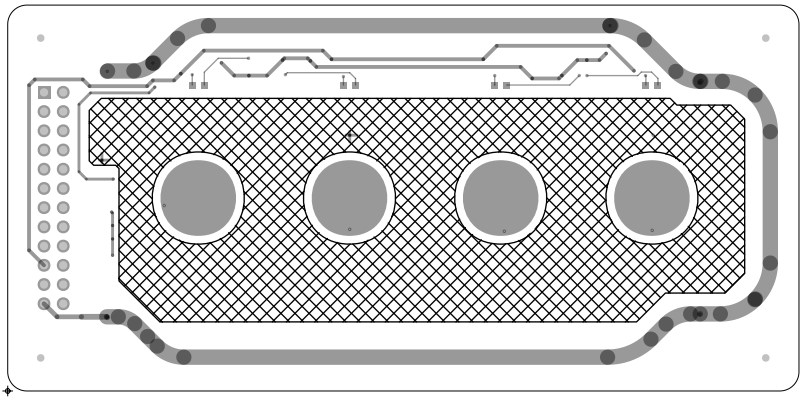

Infineon Technologies AG
Am Campeon 1-15
85579 NEUBIBERG - GERMANY

PROJECT: CAPSENSE HOVER TOUCH EXPANSION BOARD			
DRAWN BY: PRAO			
LAYER: TOP SIDE			
DWG NO: 600-60727-01	REV: 01	DATE: 11/25/2024	

ART FILM - TOP

ART FILM - BOTTOM

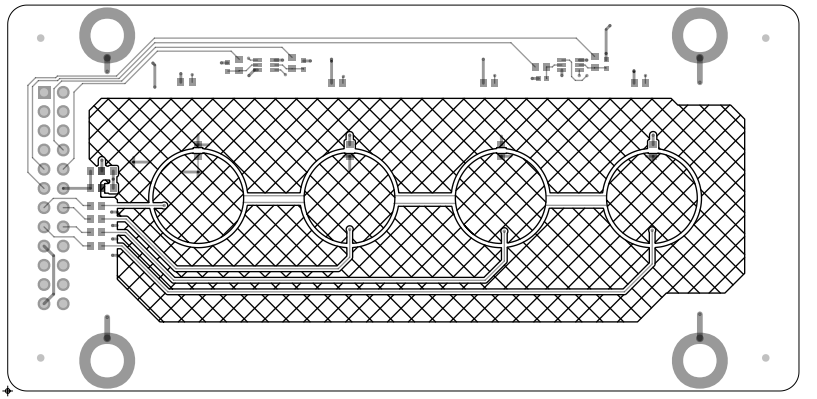

Infineon Technologies AG
Am Campeon 1-15
85579 NEUBIBERG - GERMANY

PROJECT: CAPSENSE HOVER TOUCH EXPANSION BOARD			
DRAWN BY: PRAO			
LAYER: BOTTOM SIDE			
DWG NO: 600-60727-01	REV: 01	DATE: 11/25/2024	

ART FILM - BOTTOM

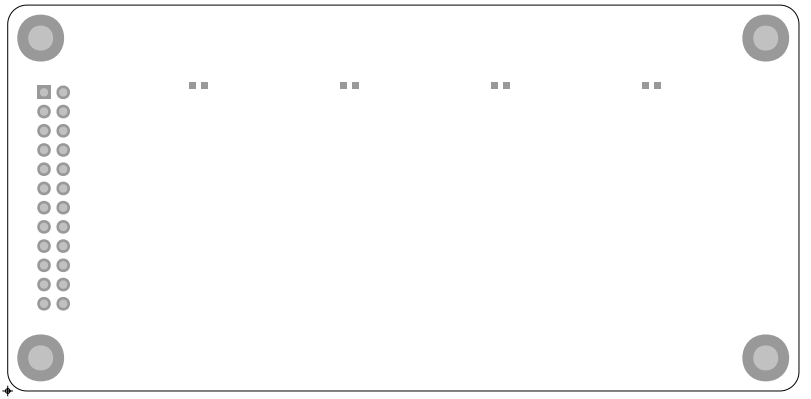

Infineon Technologies AG
Am Campeon 1-15
85579 NEUBIBERG - GERMANY

PROJECT: CAPSENSE HOVER TOUCH EXPANSION BOARD			
DRAWN BY: PRAO			
LAYER: SOLDERMASK TOP			
DWG NO: 600-60727-01	REV: 01	DATE: 11/25/2024	

ART FILM - smb

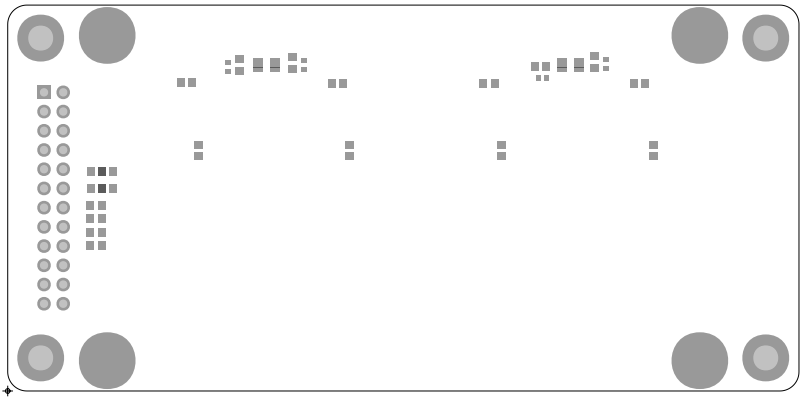

Infineon Technologies AG Am Campeon 1-15 85579 NEUBIBERG - GERMANY	PROJECT: CAPSENSE HOVER TOUCH EXPANSION BOARD		
	DRAWN BY: PRAO		
	LAYER: SOLDERMASK BOTTOM		
	DWG NO: 600-60727-01	REV: 01	DATE: 11/25/2024

ART FILM - smb

ART FILM - spt

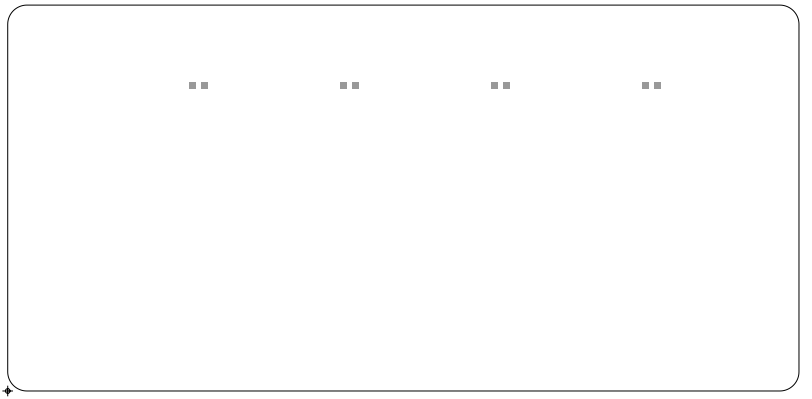

Infineon Technologies AG
Am Campeon 1-15
85579 NEUBIBERG - GERMANY

PROJECT:	CAPSENSE HOVER TOUCH EXPANSION BOARD		
DRAWN BY:	PRAO		
LAYER:	SOLDERPASTE TOP		
DWG NO: 600-60727-01		REV: 01	DATE: 11/25/2024

ART FILM - spt

ART FILM - spb

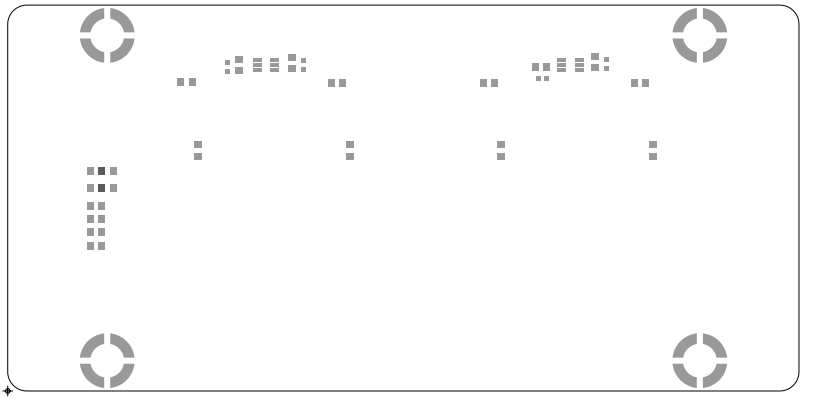

Infineon Technologies AG
Am Campeon 1-15
85579 NEUBIBERG - GERMANY

PROJECT: CAPSENSE HOVER TOUCH EXPANSION BOARD			
DRAWN BY: PRAO			
LAYER: SOLDERPASTE BOTTOM			
DWG NO: 600-60727-01	REV: 01	DATE: 11/25/2024	

ART FILM - spb

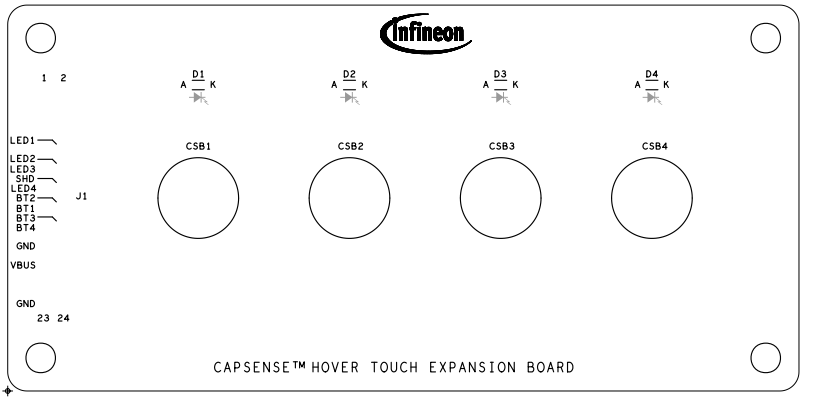

Infineon Technologies AG
Am Campeon 1-15
85579 NEUBIBERG - GERMANY

PROJECT: CAPSENSE HOVER TOUCH EXPANSION BOARD			
DRAWN BY: PRAO			
LAYER: SILKSCREEN TOP			
DWG NO: 600-60727-01	REV: 01	DATE: 11/25/2024	

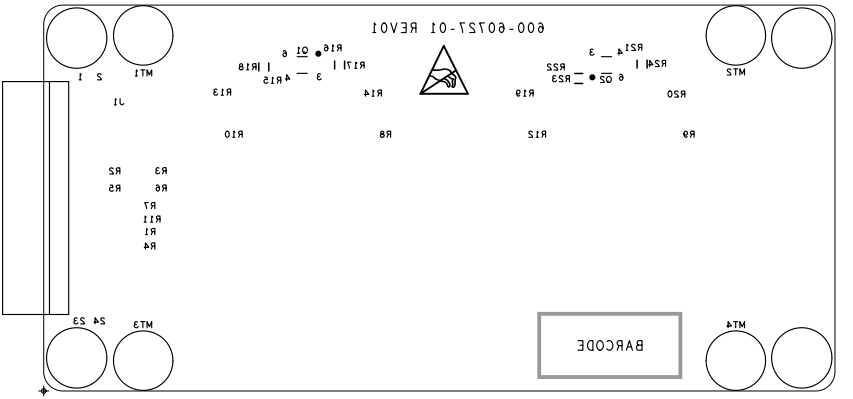

Infineon Technologies AG Am Campeon 1-15 85579 NEUBIBERG - GERMANY	PROJECT: CAPSENSE HOVER TOUCH EXPANSION BOARD		
	DRAWN BY: PRAO		
	LAYER: SILKSCREEN BOTTOM		
	DWG NO: 600-60727-01	REV: 01	DATE: 11/25/2024