PSoC 4000T Multi-Sense Control board

CONTENTS

PAGE	DESCRIPTION
01	Title, Table of Contents & Drawing Numbers
02	Functional Block Diagram
03	Power Supply Block Diagram
04	USB Interface and Power Supply
05	KitProg3 Interface
06	PSoC™ 4000T Device Interface
07	Capacitive sensor's and onboard Peripherals
08	Accessories
09	Revision History

Drawing Numbers

PCBA	121-60723-01
PCB	600-60723-01
FAB DRW	610-60723-01
ASSY DRW	620-60723-01
SCH DRW	630-60723-01

Legal Disclaimer :
The information given in this document shall in no event be regarded as a guarantee of conditions or characteristics. With respect to any examples or hints given herein, any typical values stated herein and/or any information regarding the application of the device, Infineon Technologies hereby disclaims any and all warranties and liabilities of any kind, including without limitation, warranties of non-infringement of intellectual property rights of any third party.

SCH Title : PSoC 4000T Multi-Sense Control board

Page Title: Title Page

Size	Document Number	Drawn By	Approved By	Rev
A4	630-60723-01	Vamsi	Ronak	01

Date: Friday, July 19, 2024

Functional Block Diagram

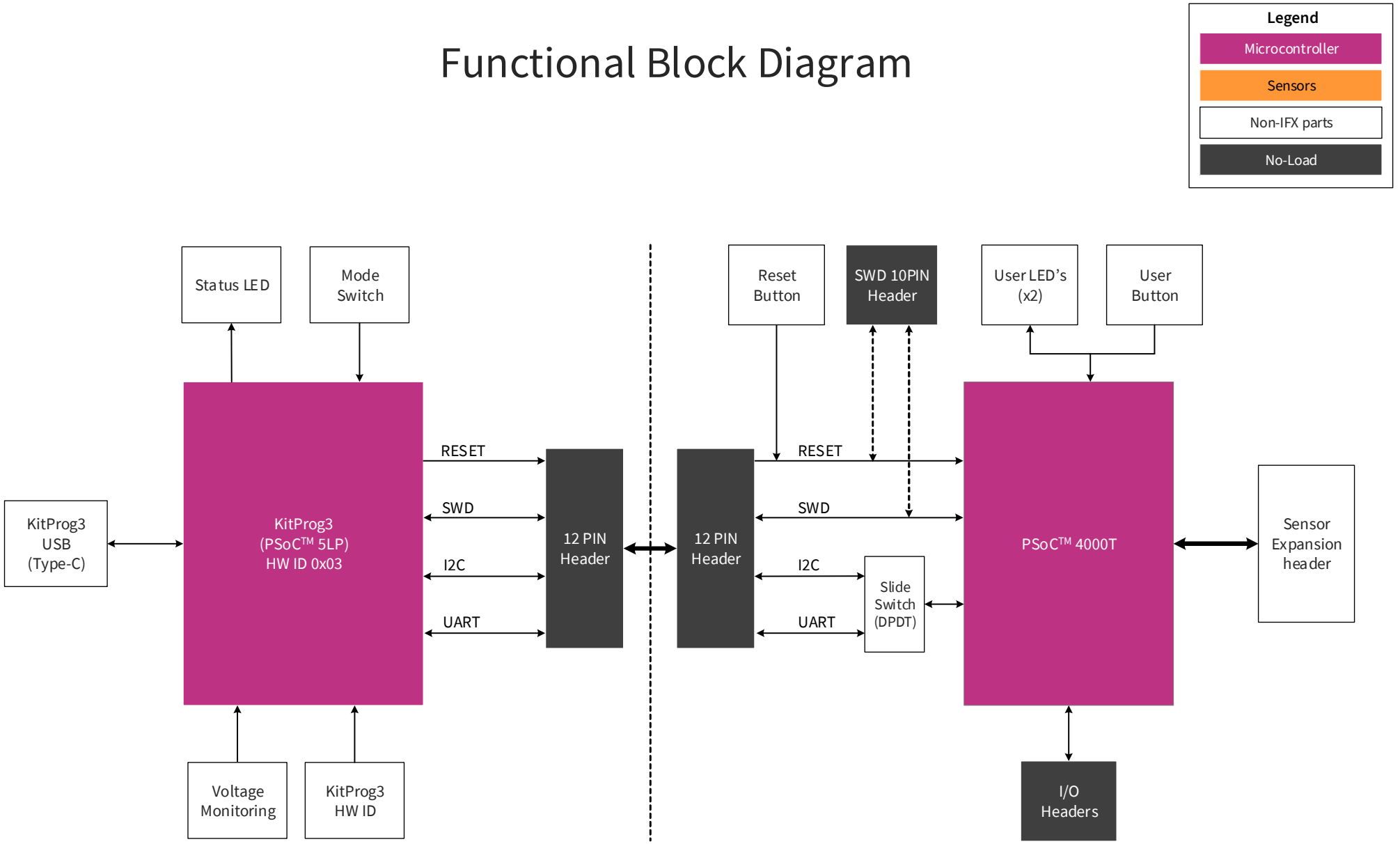

Legal Disclaimer :
The information given in this document shall in no event be regarded as a guarantee of conditions or characteristics. With respect to any examples or hints given herein, any typical values stated herein and/or any information regarding the application of the device, Infineon Technologies hereby disclaims any and all warranties and liabilities of any kind, including without limitation, warranties of non-infringement of intellectual property rights of any third party.

SCH Title :	**PSoC 4000T Multi-Sense Control board**			
Page Title:	**Functional Block Diagram**			
Size	Document Number	Drawn By	Approved By	Rev
A4	**630-60723-01**	**Vamsi**	**Ronak**	**01**
Date:	Friday, July 19, 2024		Sheet **2** of **8**	

Power Block Diagram

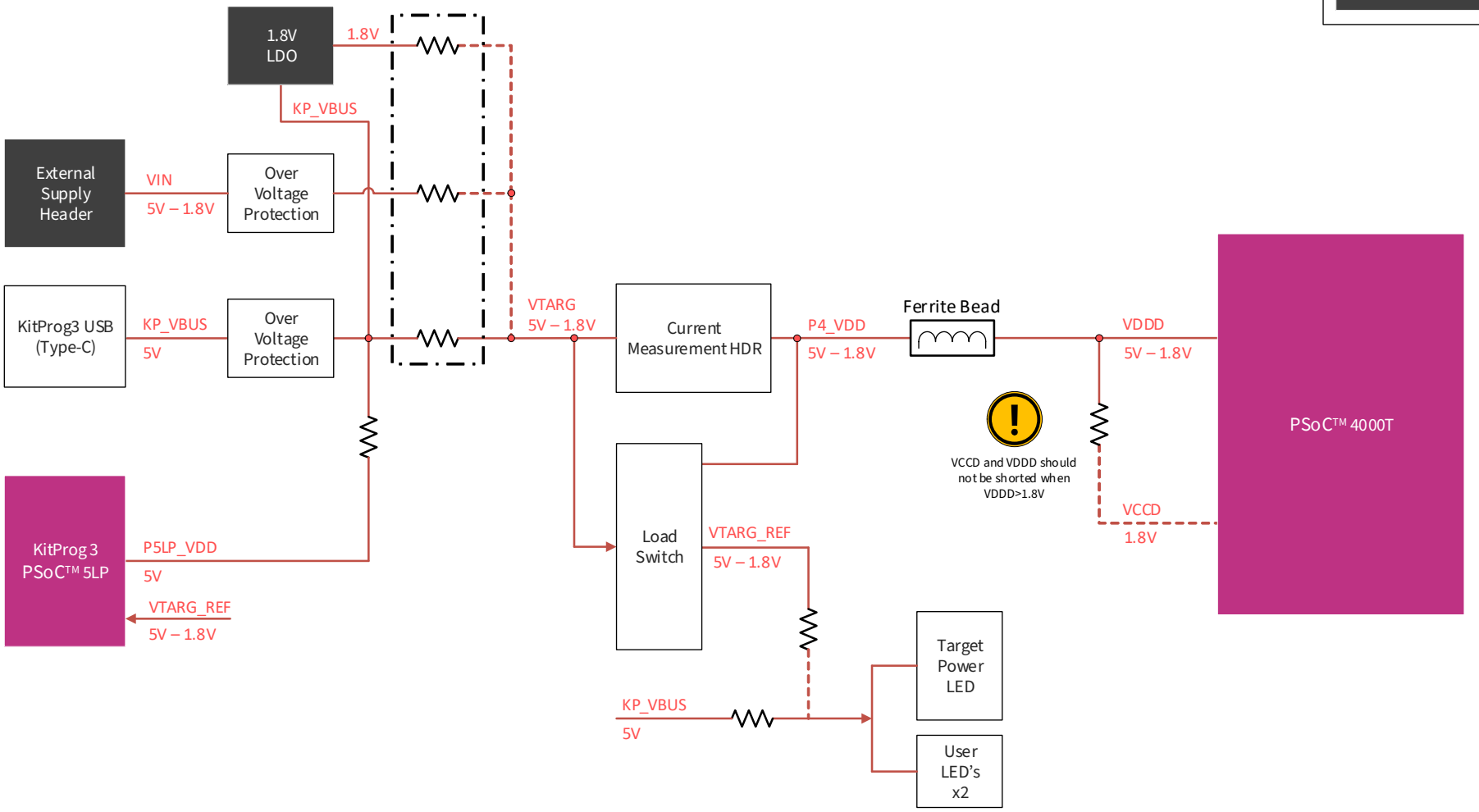

Legal Disclaimer :
The information given in this document shall in no event be regarded as a guarantee of conditions or characteristics. With respect to any examples or hints given herein, any typical values stated herein and/or any information regarding the application of the device, Infineon Technologies hereby disclaims any and all warranties and liabilities of any kind, including without limitation, warranties of non-infringement of intellectual property rights of any third party.

SCH Title :	**PSoC 4000T Multi-Sense Control board**			
Page Title:	**Power supply Block Diagram**			
Size	Document Number	Drawn By	Approved By	Rev
A4	**630-60723-01**	**Vamsi**	**Ronak**	**01**
Date:	Friday, July 19, 2024		Sheet 3 of 8	

USB Power Supply and Interface

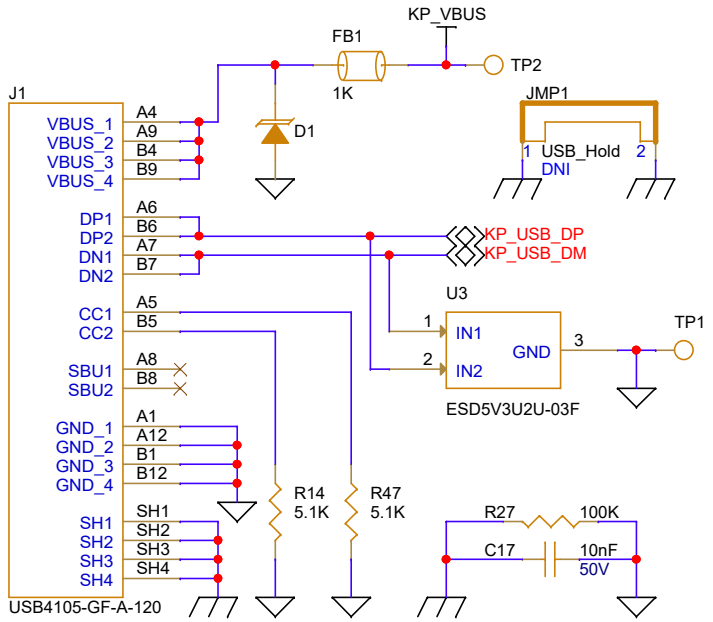

VTARG Reference Voltage (1.8V to 5V based on VTARG)

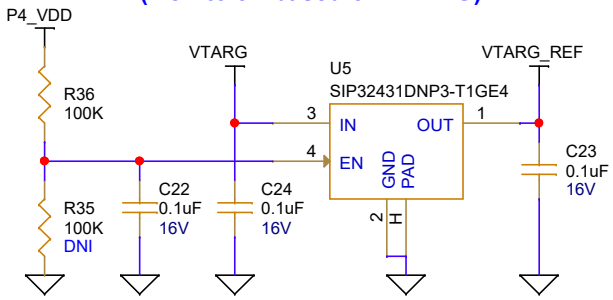

Voltage supply for Peripherals

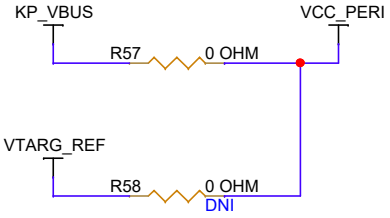

Note:
Unmount the R57 and mount R58 to select VTARG_REF as peripheral supply voltage

3.3V Voltage regulator

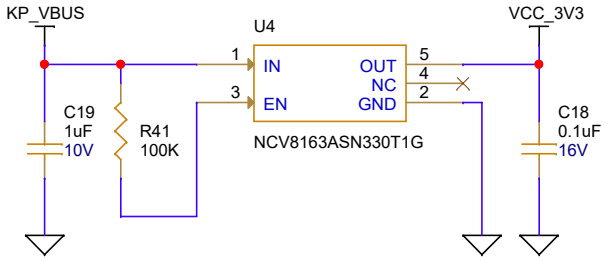

Power LED

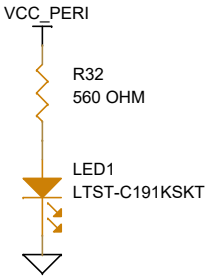

Target Voltage Supply

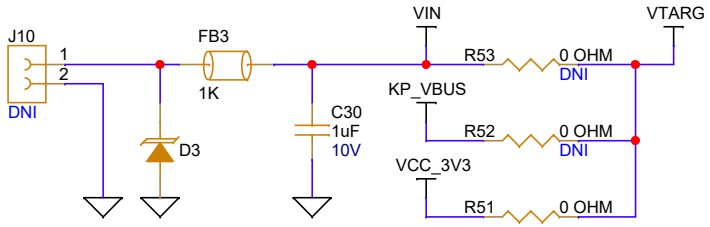

Note:
External supply should be minimum of 1.8V to maximum of 5V. For external supply of 1.8V, populate resistor R45 to short VDDD and VCCD

Note:
1. Unmount the R52 and mount R53 to select external supply as Target voltage

2. Unmount the R52 and mount R51 to select 1.8V supply from onboard LDO as Target voltage

Current Measurement Header

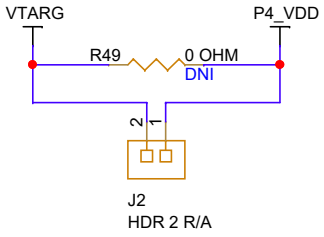

Note:
This header is used for mesuring current consumed by the PSoC™ 4000T MCU

Legal Disclaimer :
The information given in this document shall in no event be regarded as a guarantee of conditions or characteristics. With respect to any examples or hints given herein, any typical values stated herein and/or any information regarding the application of the device, Infineon Technologies hereby disclaims any and all warranties and liabilities of any kind, including without limitation, warranties of non-infringement of intellectual property rights of any third party.

SCH Title : PSoC 4000T Multi-Sense Control board

Page Title: USB Interface and Power Supply

Size	Document Number	Drawn By	Approved By	Rev
A4	630-60723-01	Vamsi	Ronak	01

Date: Friday, July 19, 2024 Sheet 4 of 8

PSoC™ 5LP based KitProg3

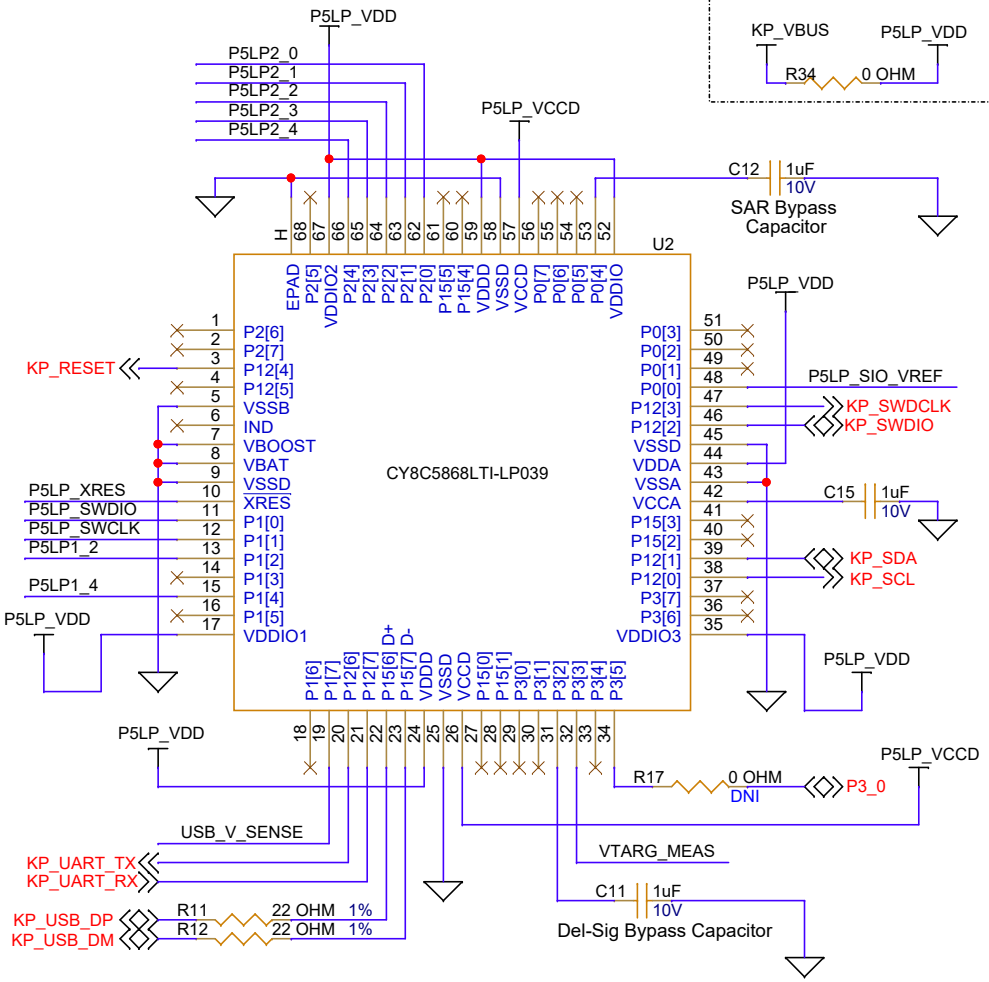

PSoC™ 5LP Power

Decoupling Capacitors

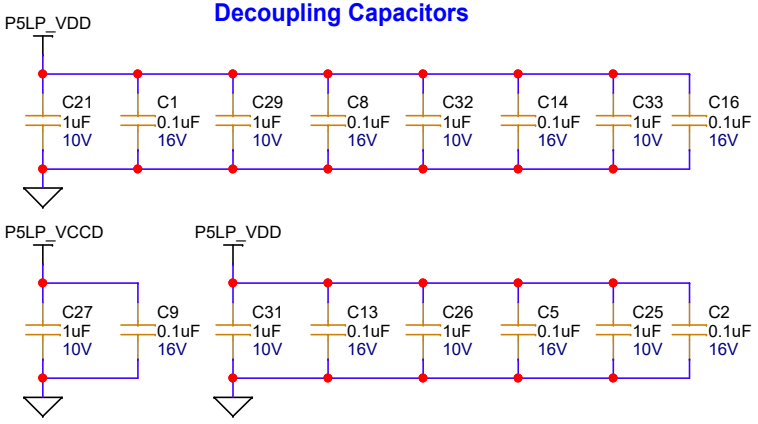

Voltage Monitoring

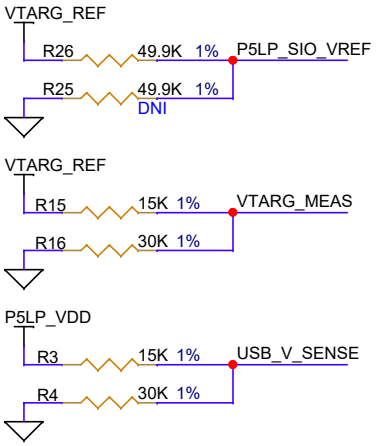

PSoC™ 5LP Programming Header

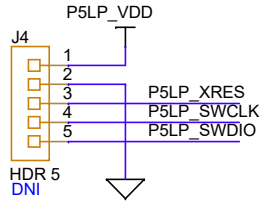

Note:
This is used for programing on board PSoC5LP with KitProg3 firmware

KitProg3 UART RX Pull Up

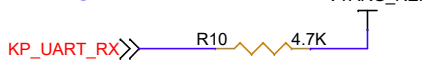

KitProg3 breakout header

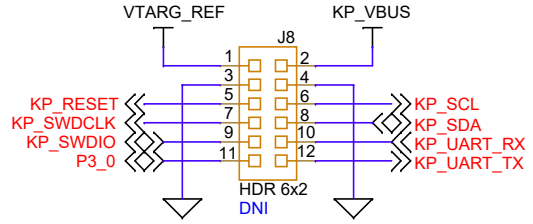

KitProg3 H/W Revision

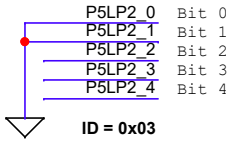

ID = 0x03

Note:
GND is read as binary "1" and floating as "0"

KitProg3 Mode Switch

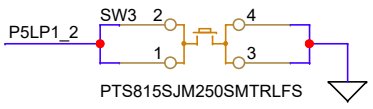

KitProg3 Status LED

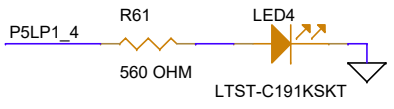

Legal Disclaimer :
The information given in this document shall in no event be regarded as a guarantee of conditions or characteristics. With respect to any examples or hints given herein, any typical values stated herein and/or any information regarding the application of the device, Infineon Technologies hereby disclaims any and all warranties and liabilities of any kind, including without limitation, warranties of non-infringement of intellectual property rights of any third party.

SCH Title : PSoC 4000T Multi-Sense Control board				
Page Title: KitProg3 Interface				
Size	Document Number	Drawn By	Approved By	Rev
A4	630-60723-01	Vamsi	Ronak	01
Date: Friday, July 19, 2024			Sheet 5 of 8	

PSoC™ 4000T Device IOs

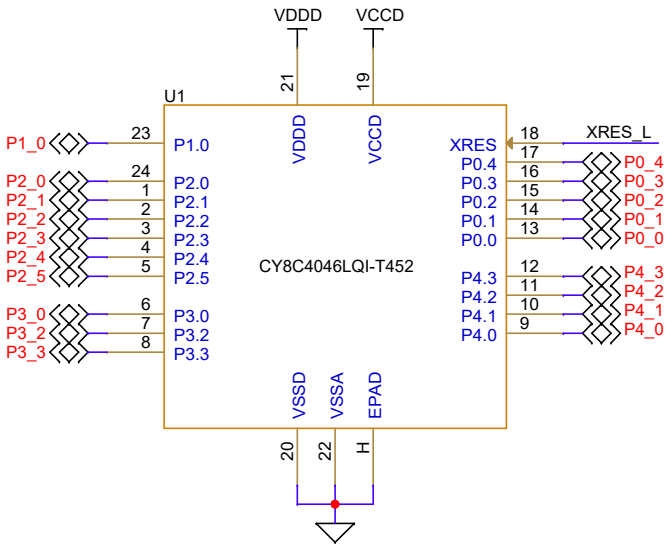

PSoC™ 4000T Device Power

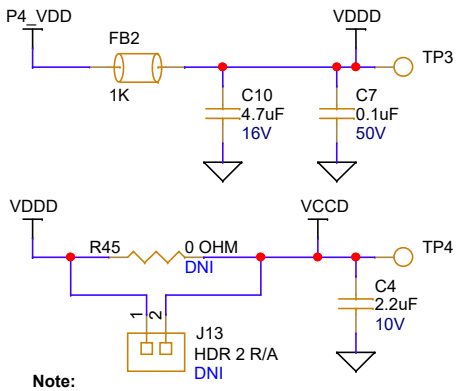

Note:
R45 should be populated when VDDD is 1.8V.

Reset Button

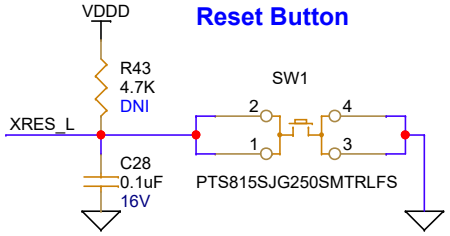

CMOD Capacitors

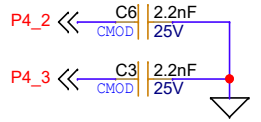

KitProg3 SWD interface

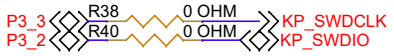

Note:
Unmount the R38, R40 and mount R39, R37 for External programmer interface

KitProg3 I2C and UART Interface Switch

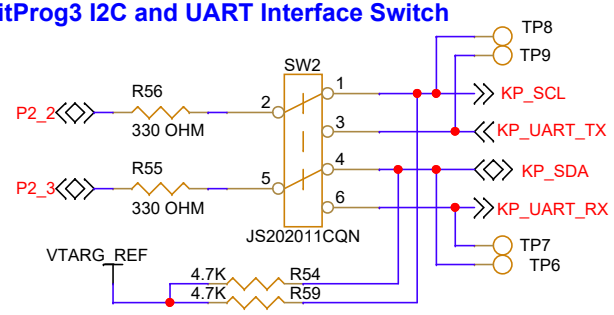

PSoC™ 4000T Device I/O breakout header

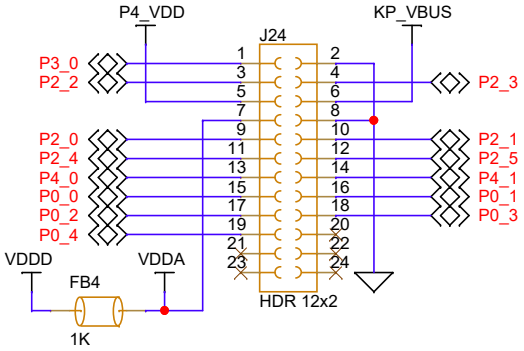

User LED's and Button

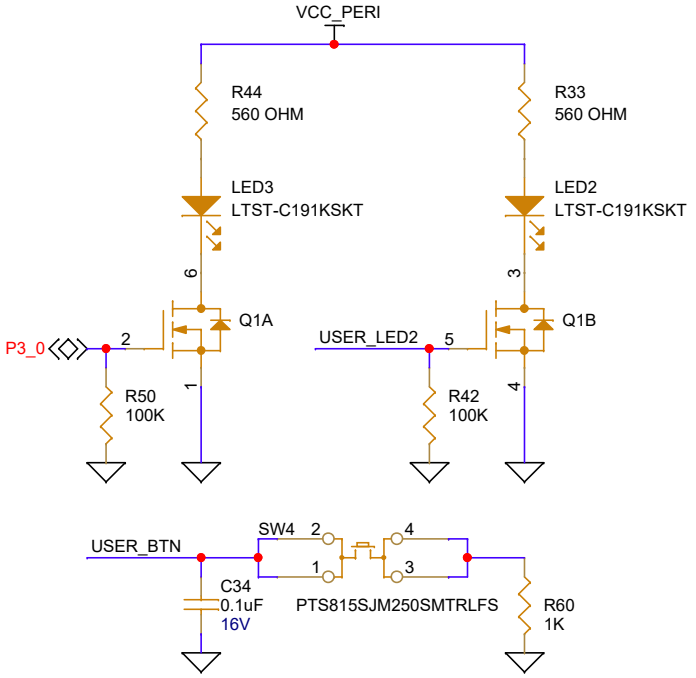

PSoC™ 4000T SWD Programming/Debugging Header

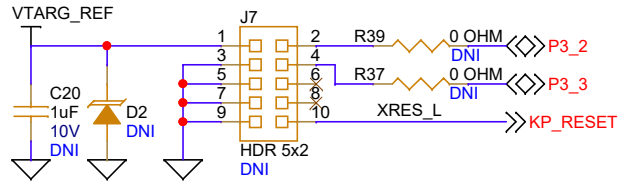

User LED / User Button selection jumper

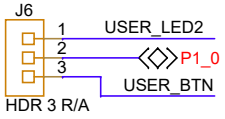

Note:
Use jumper to short J6.1 and J6.2 to enable user_LED2, short J6.2 and J6.3 to enable User_Button

Legal Disclaimer :
The information given in this document shall in no event be regarded as a guarantee of conditions or characteristics. With respect to any examples or hints given herein, any typical values stated herein and/or any information regarding the application of the device, Infineon Technologies hereby disclaims any and all warranties and liabilities of any kind, including without limitation, warranties of non-infringement of intellectual property rights of any third party.

SCH Title : **PSoC 4000T Multi-Sense Control board**				
Page Title: **PSoC™ 4000T Device Interface**				
Size	Document Number	Drawn By	Approved By	Rev
A4	**630-60723-01**	**Vamsi**	**Ronak**	**01**
Date:	Friday, July 19, 2024		Sheet **6** of **8**	

Accessories

Jumper Shunt

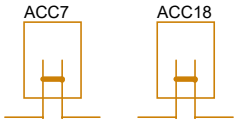

PCBA Label



PSoC™ 4000T breakout header

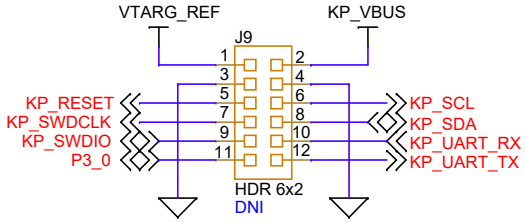

Bumpons

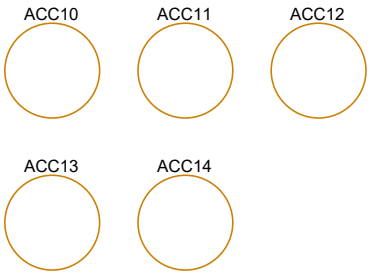

Legal Disclaimer :
The information given in this document shall in no event be regarded as a guarantee of conditions or characteristics. With respect to any examples or hints given herein, any typical values stated herein and/or any information regarding the application of the device, Infineon Technologies hereby disclaims any and all warranties and liabilities of any kind, including without limitation, warranties of non-infringement of intellectual property rights of any third party.

SCH Title :	**PSoC 4000T Multi-Sense Control board**			
Page Title:	**On-board Peripherals and Accessories**			
Size	Document Number	Drawn By	Approved By	Rev
A4	**630-60723-01**	**Vamsi**	**Ronak**	**01**
Date:	Friday, July 19, 2024		Sheet **7** of **8**	

REVISION HISTORY

REV	DESCRIPTION OF CHANGE	DATE
0.01	Initial release	2024/04/30
0.02	added KitProg3 breakout header	2024/04/30
0.03	CMOD capacitor changed to 0402 package & test points updated to SMD	2024/05/13
0.04	updated the TCPWM pin assignment and VDDD to P4_VDD	2024/07/15
0.05	1.8V regulator is updated with 3.3V regulator	2024/07/19
01	Initial release	2024/07/19

Legal Disclaimer :
The information given in this document shall in no event be regarded as a guarantee of conditions or characteristics. With respect to any examples or hints given herein, any typical values stated herein and/or any information regarding the application of the device, Infineon Technologies hereby disclaims any and all warranties and liabilities of any kind, including without limitation, warranties of non-infringement of intellectual property rights of any third party.

SCH Title : PSoC 4000T Multi-Sense Control board

Page Title: Revision History

Size	Document Number	Drawn By	Approved By	Rev
A4	630-60723-01	Vamsi	Ronak	01

Date: Friday, July 19, 2024 Sheet 8 of 8