ART FILM - TOP

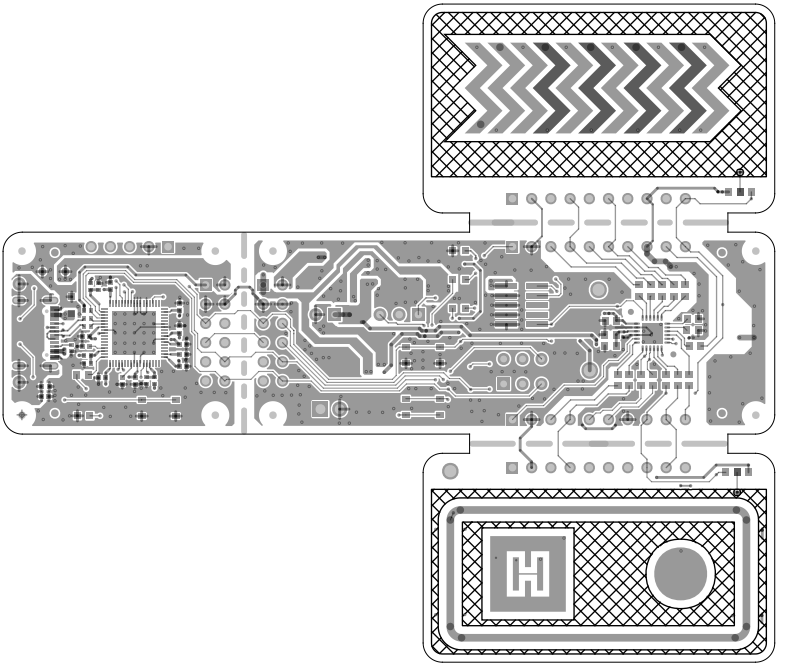

Infineon Technologies AG Am Campeon 1-15 85579 NEUBIBERG - GERMANY	PROJECT: PSoC 4000T CAPSENSE PROTOTYPING KIT		
	DRAWN BY: PRAO		
	LAYER: TOP SIDE		
	DWG NO: 610-60682-01	REV: 02	DATE: 09/26/2023

ART FILM - TOP

Infineon Technologies AG Am Campeon 1-15 85579 NEUBIBERG - GERMANY	PROJECT: PSoC 40007 CAPSENSE PROTOTYPING KIT	
	DRAWN BY: PRAO	
	LAYER: BOTTOM SIDE	
	DWG NO: 610-60682-01	REV: 02 DATE: 09/26/2023

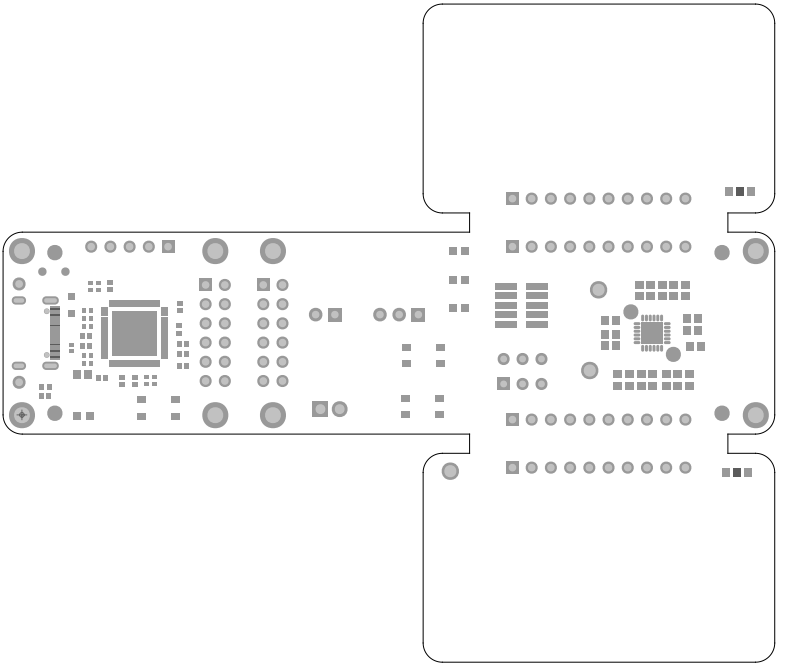

Infineon Technologies AG
Am Campeon 1-15
85579 NEUBIBERG - GERMANY

PROJECT: PSoC 4000T CAPSENSE PROTOTYPING KIT			
DRAWN BY: PRAO			
LAYER: SOLDERMASK TOP			
DWG NO: 610-60682-01	REV: 02	DATE: 09/26/2023	

PROJECT: PSoC 40007 CAPSENSE PROTOTYPING KIT		Infineon Technologies AG Am Campeon 1-15 85579 NEUBIBERG - GERMANY
DRAWN BY: PRAO		
LAYER: SOLDERMASK BOTTOM		
DWG NO: 610-60682-01	REV: 02	DATE: 09/26/2023

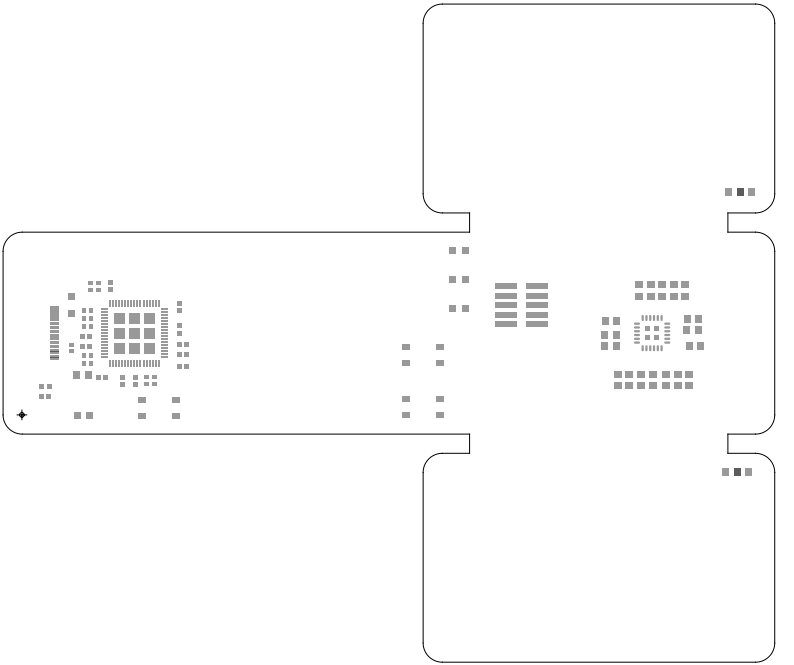

Infineon Technologies AG
Am Campeon 1-15
85579 NEUBIBERG - GERMANY

PROJECT: PSoC 4000T CAPSENSE PROTOTYPING KIT			
DRAWN BY: PRAO			
LAYER: SOLDERPASTE TOP			
DWG NO: 610-60682-01	REV: 02	DATE: 09/26/2023	

Infineon Technologies AG Am Campeon 1-15 85579 NEUBIBERG - GERMANY	PROJECT: PSoC 40007 CAPSENSE PROTOTYPING KIT	
	DRAWN BY: PRAO	
	LAYER: SOLDERPASTE BOTTOM	
	DWG NO: 610-60685-01	REV: 02 DATE: 09/26/2023

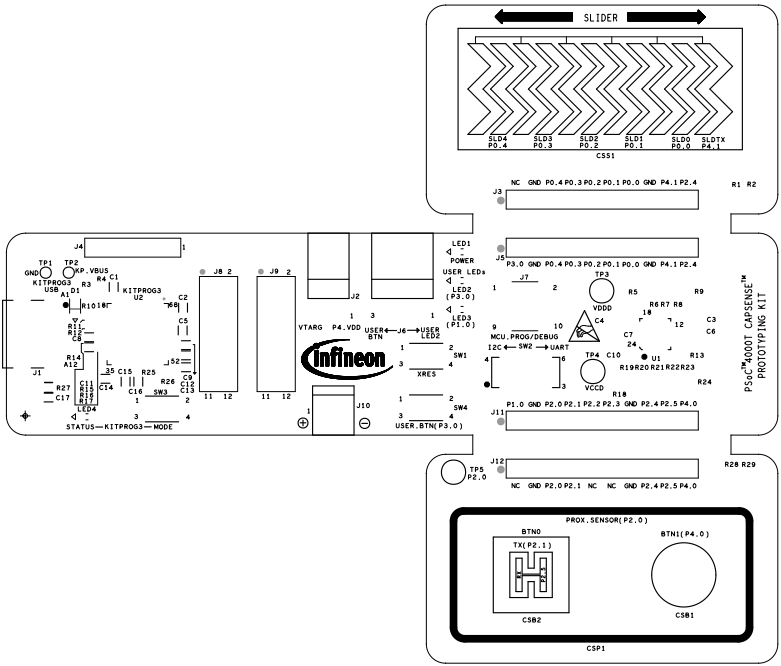

Infineon Technologies AG Am Campeon 1-15 85579 NEUBIBERG - GERMANY	PROJECT: PSoC 4000T CAPSENSE PROTOTYPING KIT		
	DRAWN BY: PRAO		
	LAYER: SILKSCREEN TOP		
	DWG NO: 610-60682-01	REV: 02	DATE: 09/26/2023

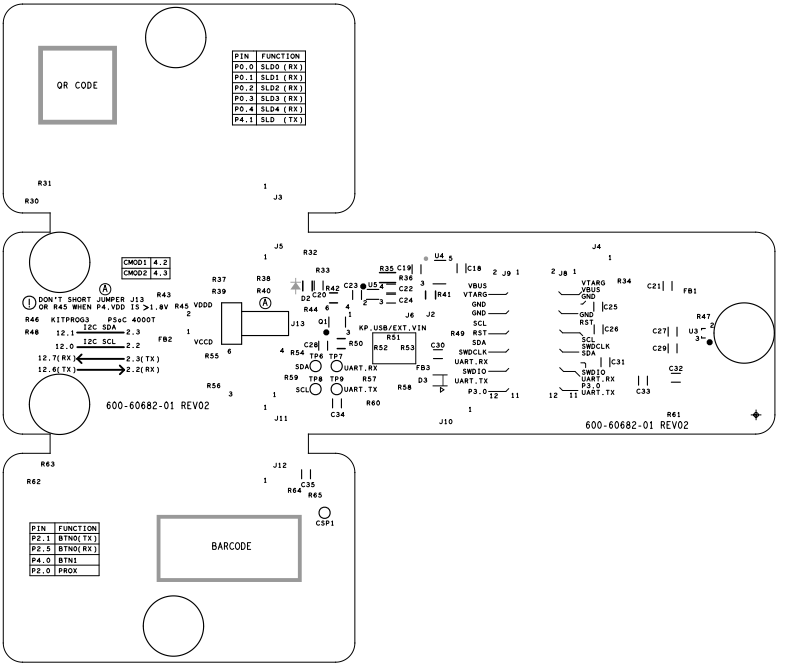

PROJECT:	PSoC 4000T CAPSENSE PROTOTYPING KIT
DRAWN BY:	PRAO
LAYER:	SILKSCREEN BOTTOM
DWG NO:	610-60682-01
REV:	02
DATE:	09\26\2023

Infineon Technologies AG
Am Campeon 1-15
85579 NEUBIBERG - GERMANY