CY8CMOD-064B0S2-4343W
PSoC 64B0S2 with CYW4343W Carrier Module

CONTENTS

PAGE	DESCRIPTION
01	Title, Table of Contents & Drawing Numbers
02	Block Diagram
03	PSoC 64 MCU Power
04	PSoC 64 MCU Signals
05	LBEE5KL1DX Module Power
06	LBEE5KL1DX Module Signals
07	Interface to BaseBoard
08	Revision History

Drawing Numbers

PCBA	121-60573-01
PCB	600-60573-01
FAB DRW	610-60573-01
ASSY DRW	620-60573-01
SCH DRW	630-60573-01

CYPRESS SEMICONDUCTOR
198 CHAMPION COURT
SAN JOSE, CA 95134
(408) 943-2600

CYPRESS SEMICONDUCTOR © 2020

SCH Title : PSoC 64B0S2 with CYW4343W Carrier Module

Page Title : Title Page

Size	Document Number	Drawn By	Approved By	Rev
A4	630-60573-01	AARA	RKAD	01

Date: Tuesday, November 24, 2020 Sheet 1 of 8

Block Diagram

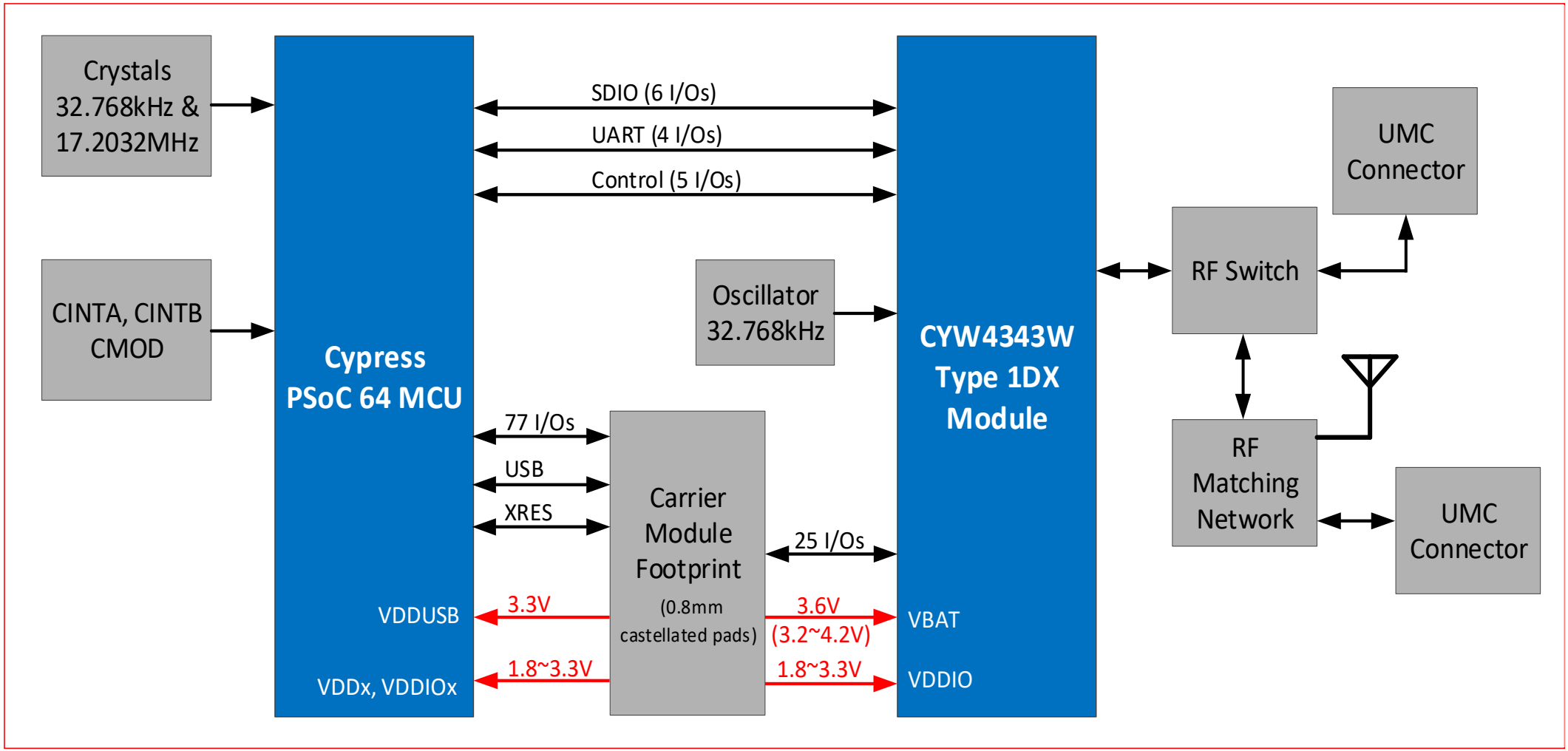

CYPRESS
EMBEDDED IN TOMORROW™

CYPRESS SEMICONDUCTOR
198 CHAMPION COURT
SAN JOSE, CA 95134
(408) 943-2600

CYPRESS SEMICONDUCTOR © 2020

SCH Title :	PSoC 64B0S2 with CYW4343W Carrier Module
Page Title :	Block Diagram

Size	Document Number	Drawn By	Approved By	Rev
A4	630-60573-01	AARA	RKAD	01

Date: Tuesday, November 24, 2020 Sheet 2 of 8

Supply for PSoC 64 MCU

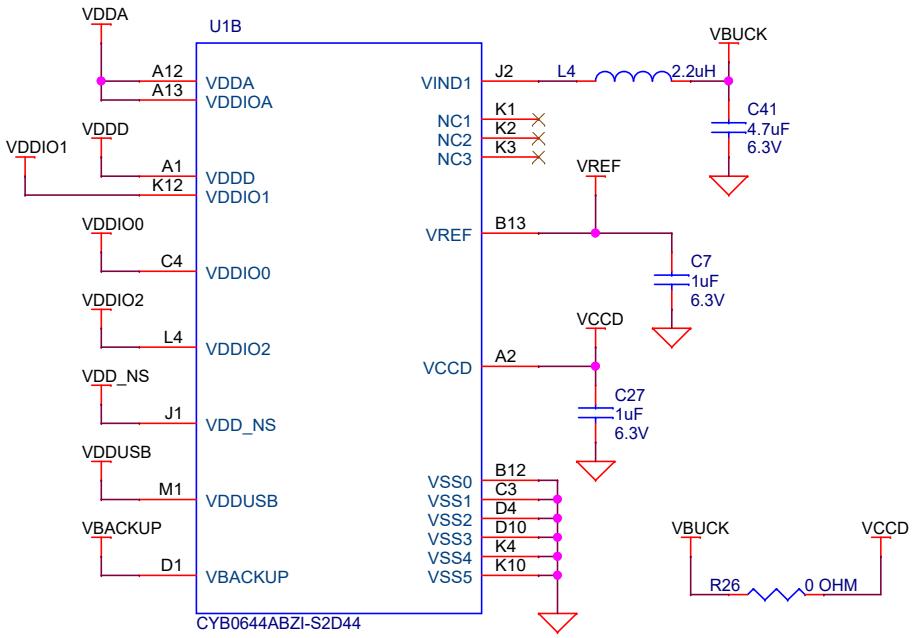

Decoupling Capacitors

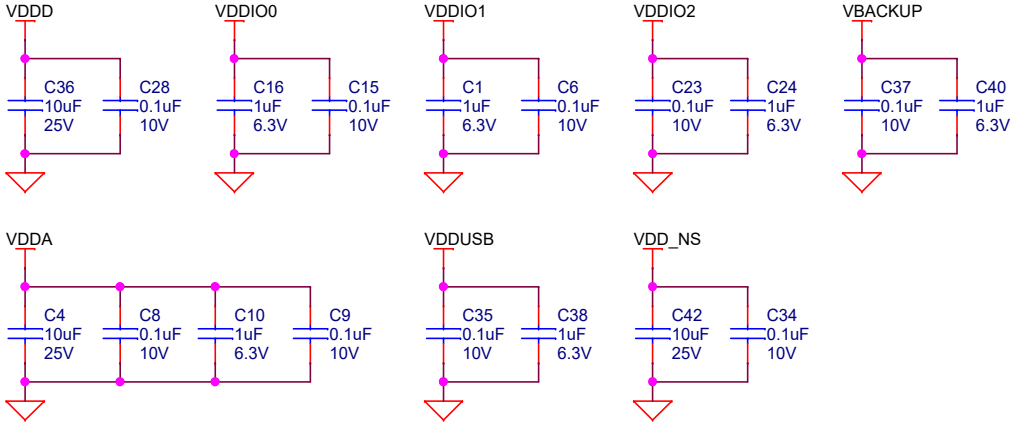

CYPRESS SEMICONDUCTOR
198 CHAMPION COURT
SAN JOSE, CA 95134
(408) 943-2600

CYPRESS SEMICONDUCTOR © 2020

SCH Title :	PSoC 64B0S2 with CYW4343W Carrier Module
Page Title :	PSoC 64 MCU Power

Size	Document Number	Drawn By	Approved By	Rev
A4	630-60573-01	AARA	RKAD	01

Date: Tuesday, November 24, 2020 Sheet 3 of 8

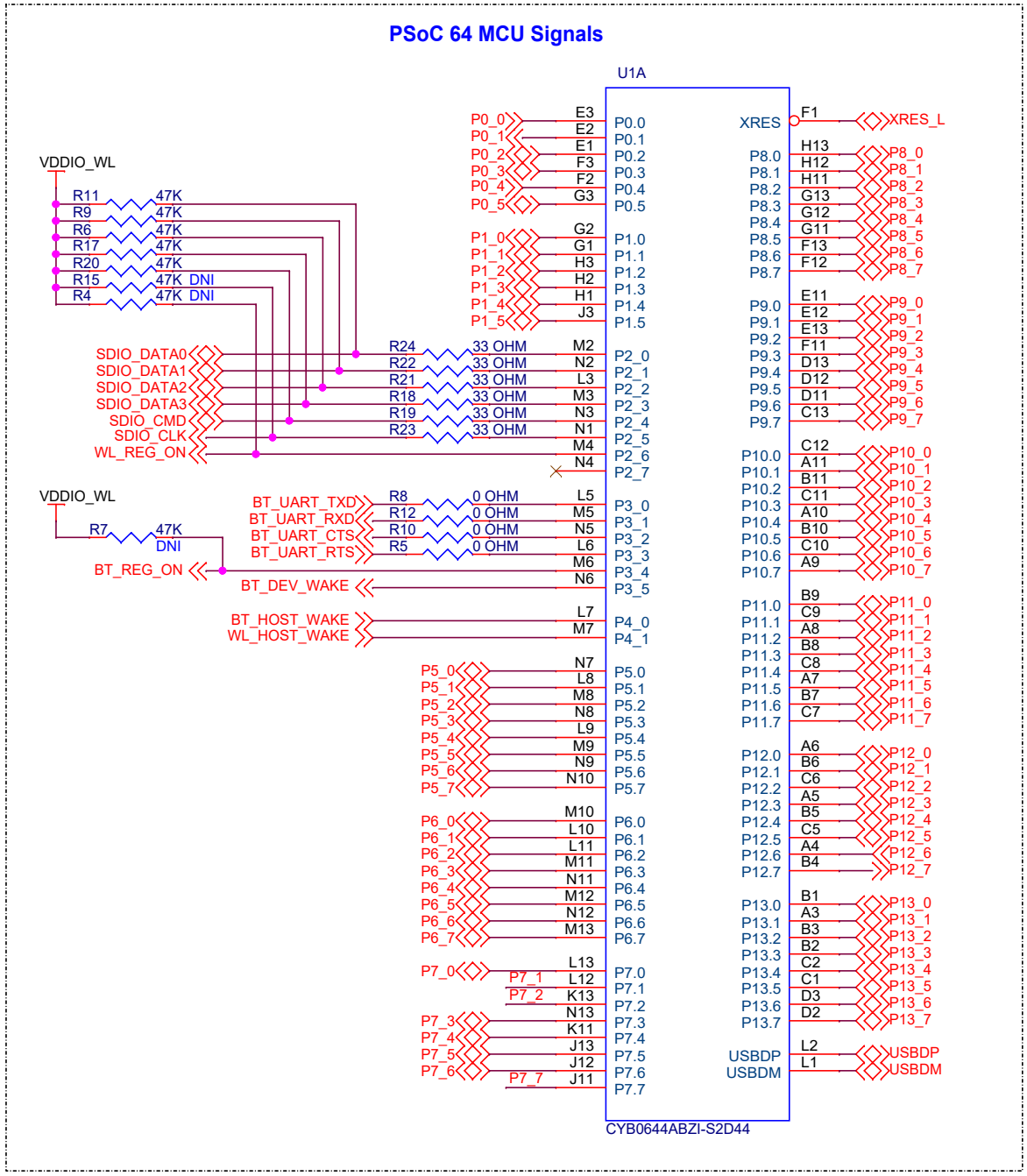

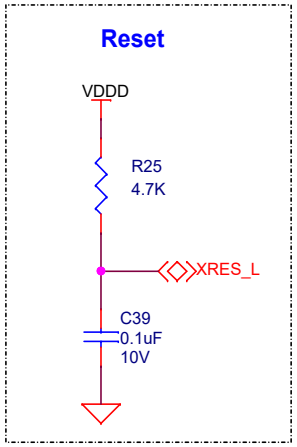

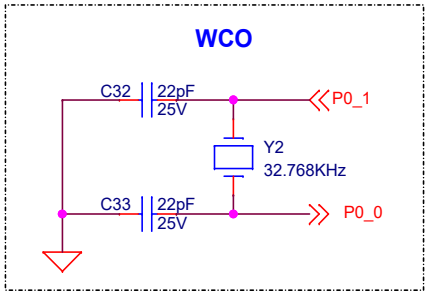

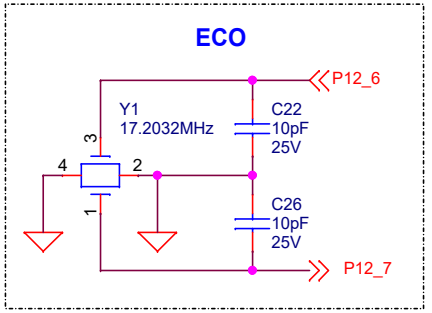

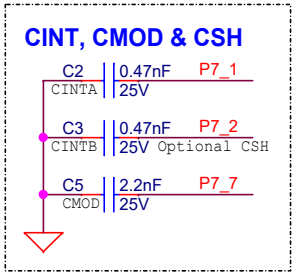

CYPRESS SEMICONDUCTOR
198 CHAMPION COURT
SAN JOSE, CA 95134
(408) 943-2600

CYPRESS SEMICONDUCTOR © 2020

SCH Title : PSoC 64B0S2 with CYW4343W Carrier Module

Page Title : PSoC 64 MCU Signals

Size	Document Number	Drawn By	Approved By	Rev
A4	630-60573-01	AARA	RKAD	01

Date: Tuesday, November 24, 2020 Sheet 4 of 8

Supply for Type 1DX Module

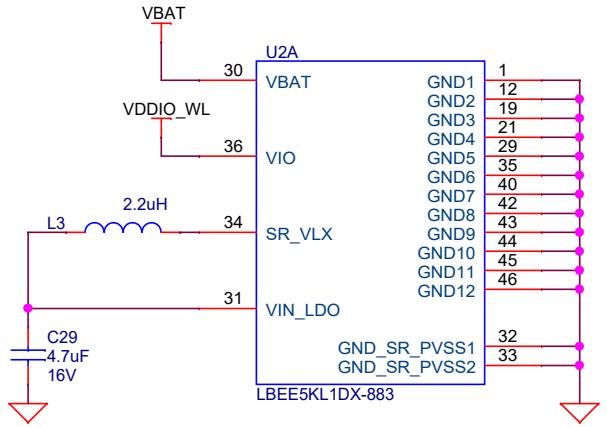

Decoupling Capacitors

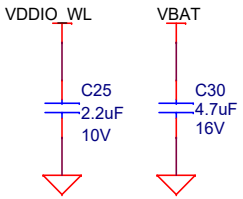

CYPRESS SEMICONDUCTOR
198 CHAMPION COURT
SAN JOSE, CA 95134
(408) 943-2600

CYPRESS SEMICONDUCTOR © 2020

SCH Title : PSoC 64B0S2 with CYW4343W Carrier Module

Page Title : LBEE5KL1DX Module Power

Size	Document Number	Drawn By	Approved By	Rev
A4	630-60573-01	AARA	RKAD	01

Date: Tuesday, November 24, 2020 Sheet 5 of 8

Type 1DX Module Signals

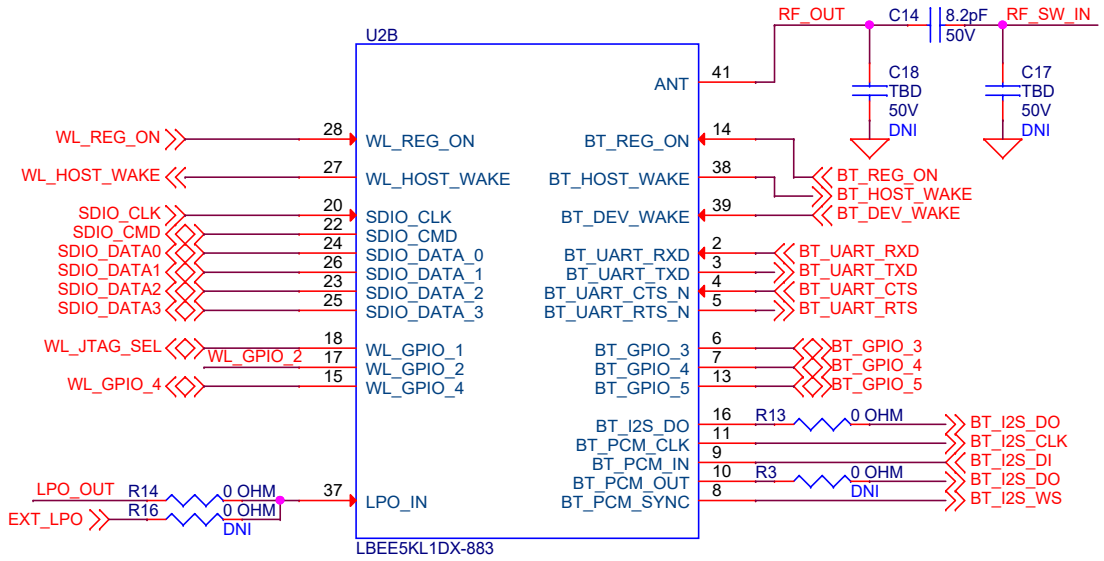

Antenna Diversity Switch

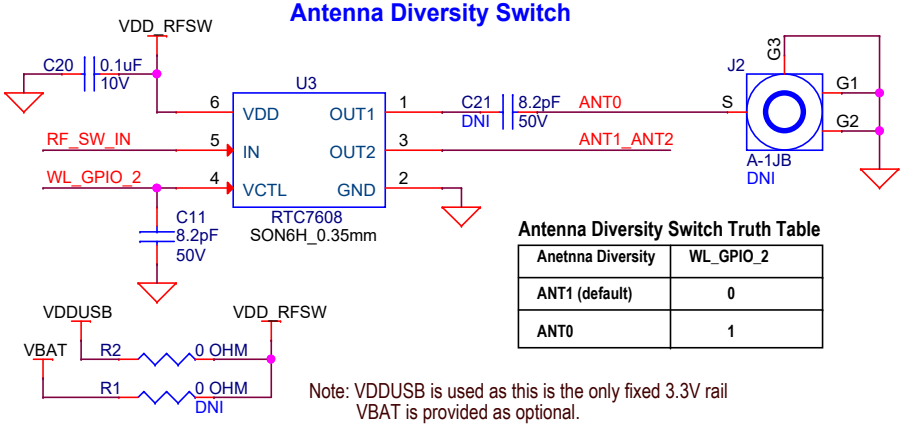

Antenna Diversity Switch Truth Table

Anetnna Diversity	WL_GPIO_2
ANT1 (default)	0
ANT0	1

Note: VDDUSB is used as this is the only fixed 3.3V rail
VBAT is provided as optional.

Antenna

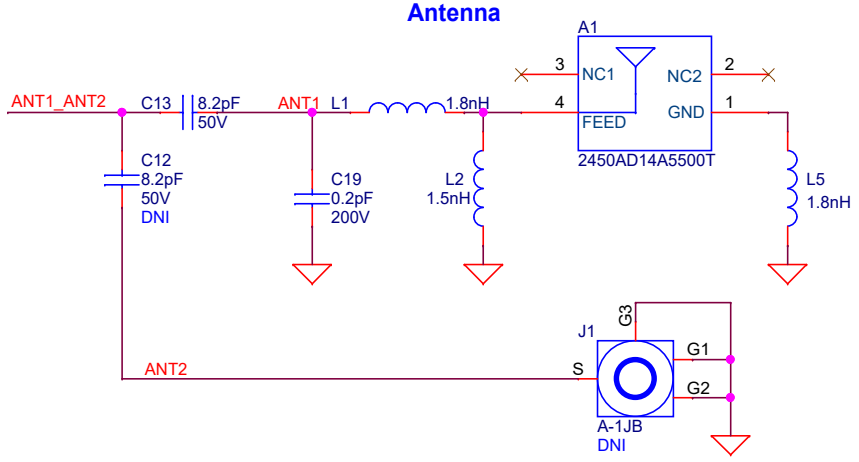

Onboard LPO

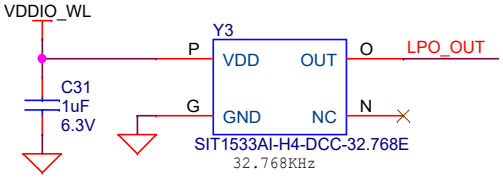

CYPRESS SEMICONDUCTOR
198 CHAMPION COURT
SAN JOSE, CA 95134
(408) 943-2600

CYPRESS SEMICONDUCTOR © 2020

SCH Title : PSoC 64B0S2 with CYW4343W Carrier Module

Page Title : LBEE5KL1DX Module Signals

Size	Document Number	Drawn By	Approved By	Rev
A4	630-60573-01	AARA	RKAD	01

Date: Tuesday, November 24, 2020 Sheet 6 of 8

Carrier Module Footprint

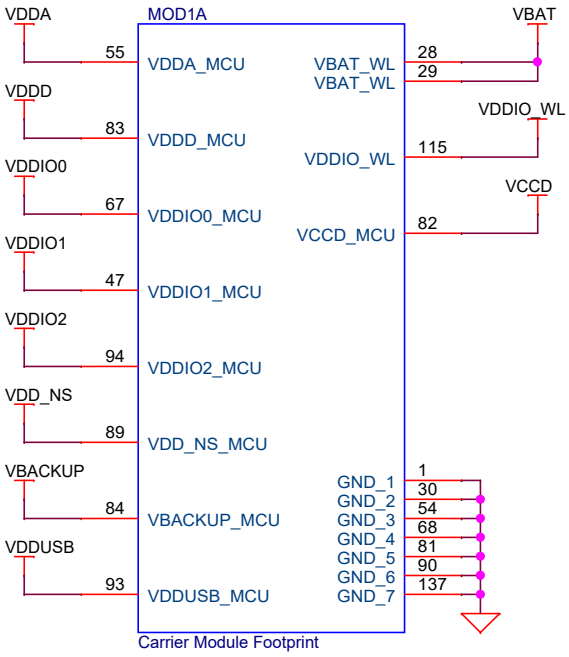

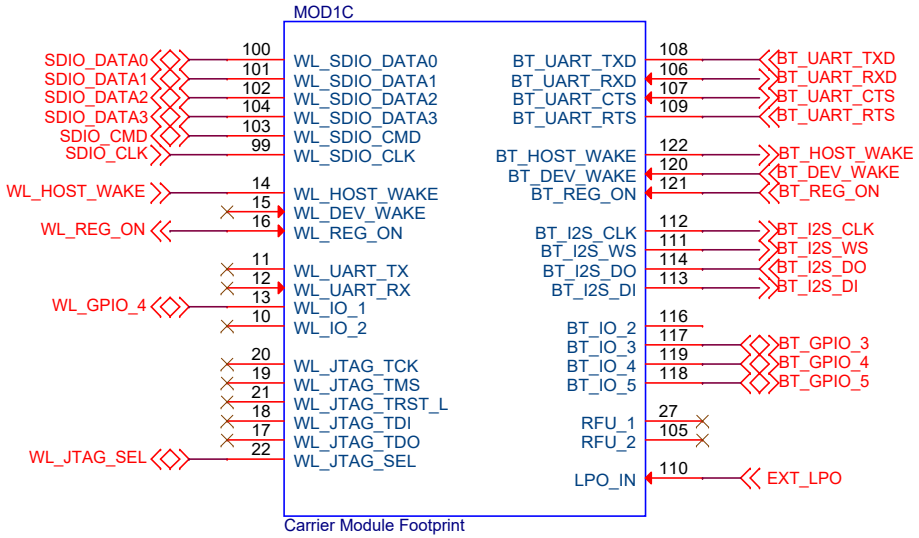

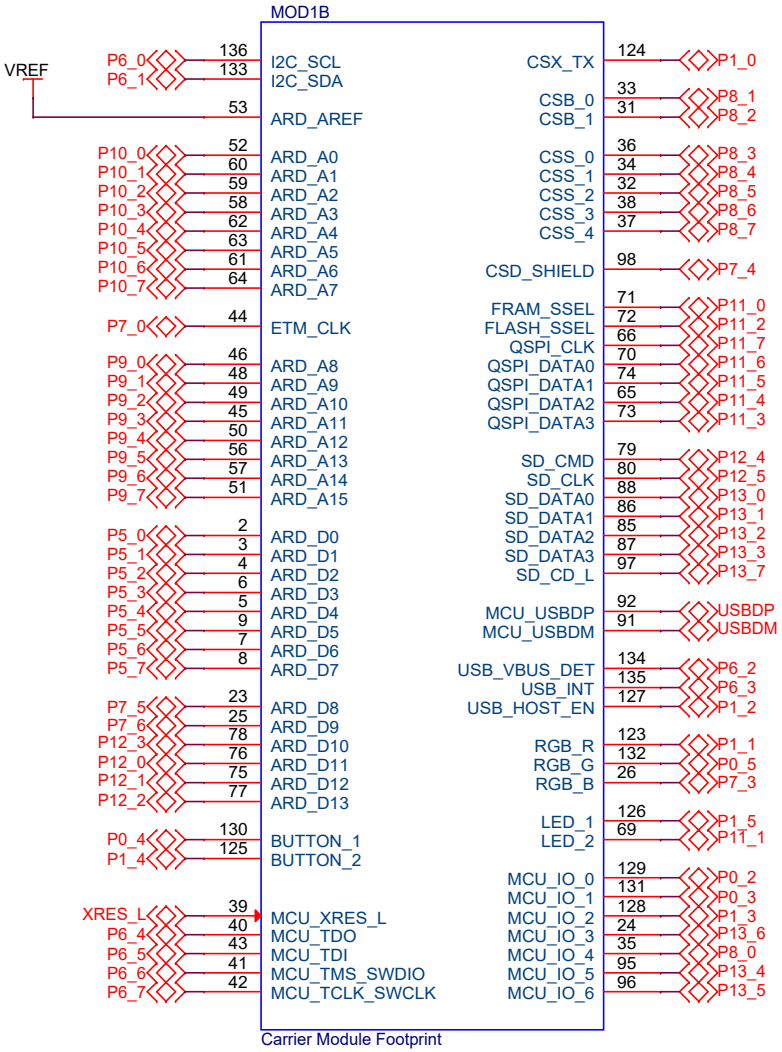

CYPRESS SEMICONDUCTOR
198 CHAMPION COURT
SAN JOSE, CA 95134
(408) 943-2600

CYPRESS SEMICONDUCTOR © 2020

SCH Title : PSoC 64B0S2 with CYW4343W Carrier Module

Page Title : Interface to BaseBoard

Size	Document Number	Drawn By	Approved By	Rev
A4	630-60573-01	AARA	RKAD	01

Date: Tuesday, November 24, 2020 Sheet 7 of 8

REVISION HISTORY

REV	DESCRIPTION OF CHANGE	Orig. of Change	DATE
01	Initial Release	AARA	2020/11/24

CYPRESS SEMICONDUCTOR
198 CHAMPION COURT
SAN JOSE, CA 95134
(408) 943-2600

CYPRESS SEMICONDUCTOR © 2020

SCH Title : PSoC 64B0S2 with CYW4343W Carrier Module

Page Title : Revision History

Size	Document Number	Drawn By	Approved By	Rev
A4	630-60573-01	AARA	RKAD	01

Date: Tuesday, November 24, 2020 Sheet 8 of 8