CY8CMOD-062S3-4343W
PSoC 6 (512K) with CYW4343W Carrier Module

CONTENTS

PAGE	DESCRIPTION
01	Title, Table of Contents & Drawing Numbers
02	Block Diagram
03	PSoC 6 MCU Power
04	PSoC 6 MCU Signals
05	LBEE5KL1DX Module Power
06	LBEE5KL1DX Module Signals
07	Interface to BaseBoard
08	Revision History

Drawing Numbers

PCBA	121-60566-01
PCB	600-60566-01
FAB DRW	610-60566-01
ASSY DRW	620-60566-01
SCH DRW	630-60566-01

CYPRESS SEMICONDUCTOR
198 CHAMPION COURT
SAN JOSE, CA 95134
(408) 943-2600

CYPRESS SEMICONDUCTOR © 2019

SCH Title : PSoC 6 (512K) with CYW4343W Carrier Module

Page Title : Title Page

Size	Document Number	Drawn By	Approved By	Rev
A4	630-60566-01	AARA	RKAD	02

Date: Thursday, September 26, 2019 Sheet 1 of 8

Block Diagram

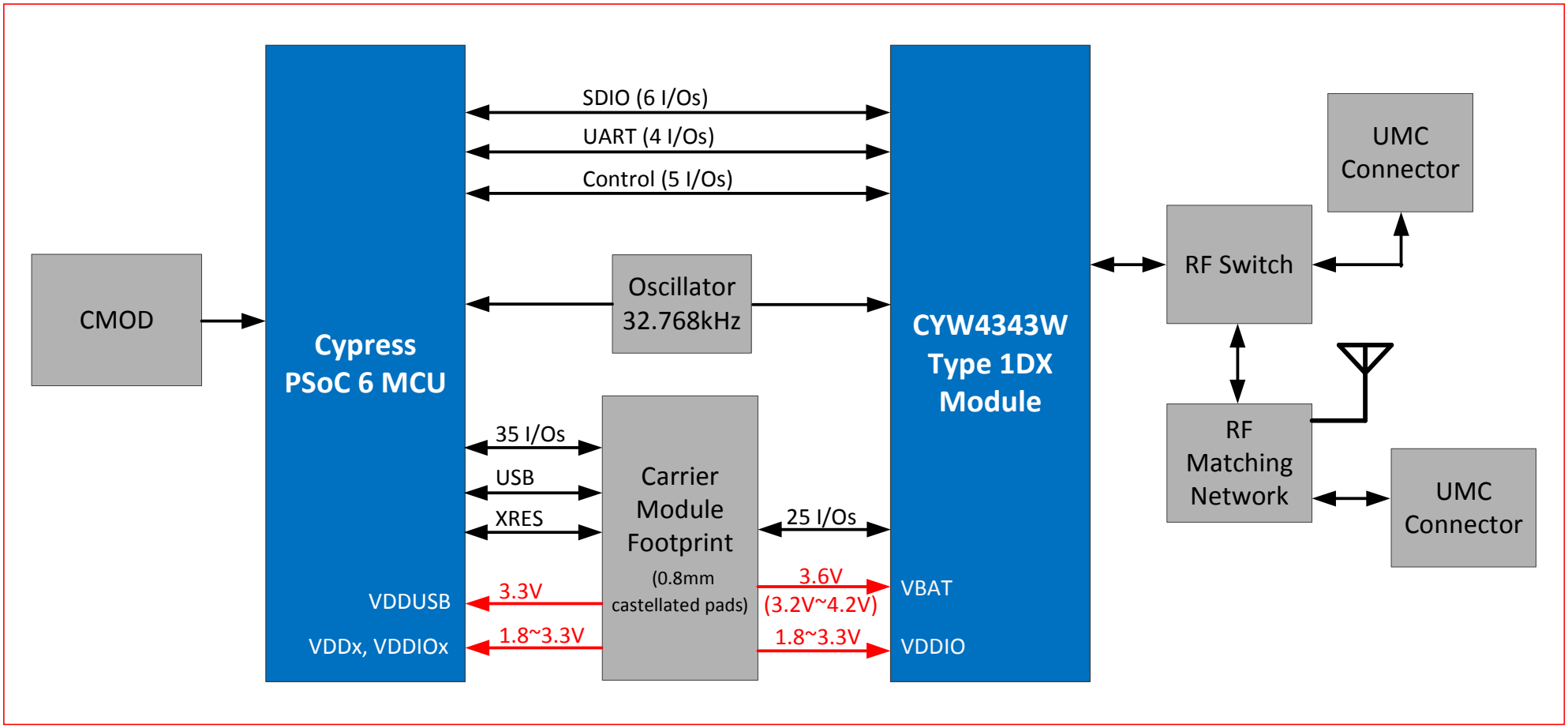

CYPRESS SEMICONDUCTOR
198 CHAMPION COURT
SAN JOSE, CA 95134
(408) 943-2600

CYPRESS SEMICONDUCTOR © 2019

SCH Title : PSoC 6 (512K) with CYW4343W Carrier Module				
Page Title : Block Diagram				
Size: A4	Document Number: 630-60566-01	Drawn By: AARA	Approved By: RKAD	Rev: 02
Date: Thursday, September 26, 2019		Sheet 2 of 8		

Supply for PSoC 6 MCU

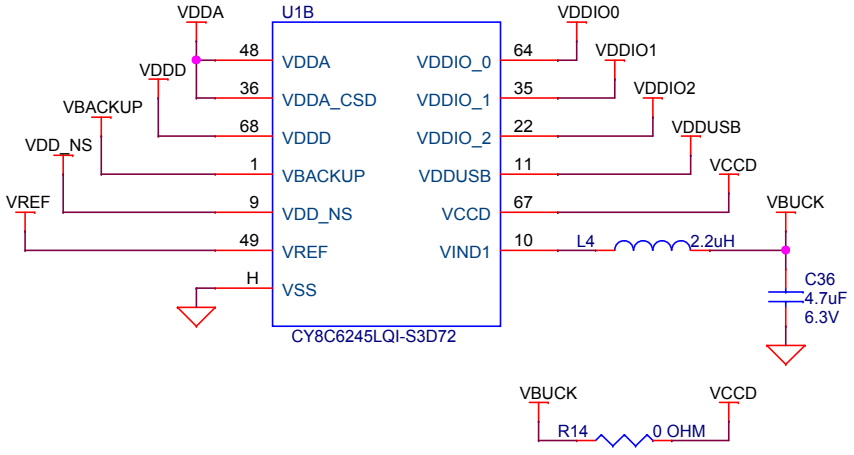

Decoupling Capacitors

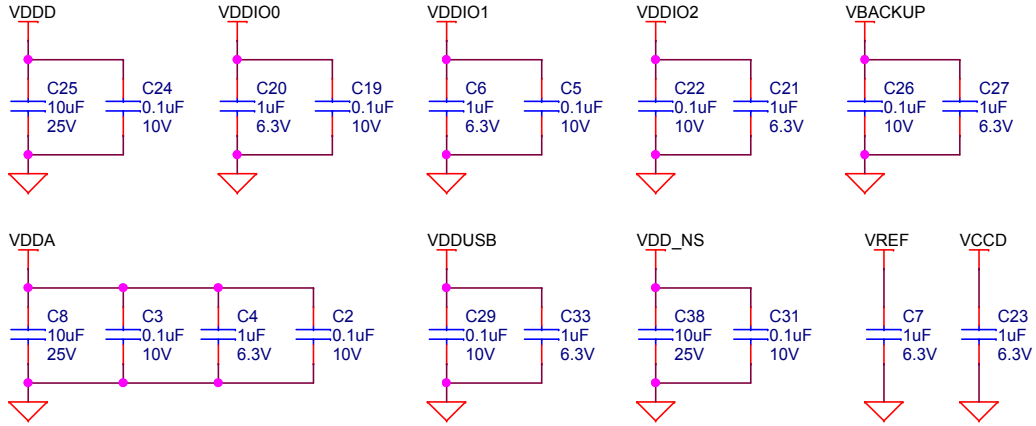

CYPRESS SEMICONDUCTOR
198 CHAMPION COURT
SAN JOSE, CA 95134
(408) 943-2600

CYPRESS SEMICONDUCTOR © 2019

SCH Title : PSoC 6 (512K) with CYW4343W Carrier Module				
Page Title : PSoC 6 Power				
Size: A4	Document Number: 630-60566-01	Drawn By: AARA	Approved By: RKAD	Rev: 02
Date: Thursday, September 26, 2019		Sheet 3 of 8		

PSoC 6 MCU Signals

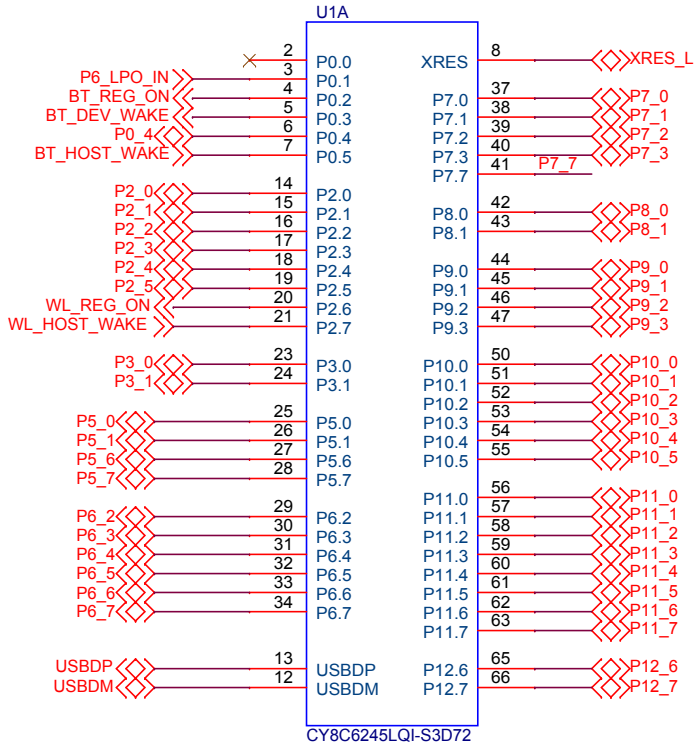

Reset

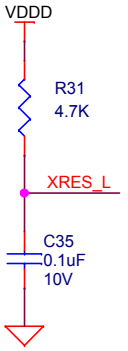

CMOD

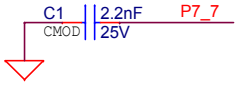

CYPRESS SEMICONDUCTOR
198 CHAMPION COURT
SAN JOSE, CA 95134
(408) 943-2600

CYPRESS SEMICONDUCTOR © 2019

SCH Title :	PSoC 6 (512K) with CYW4343W Carrier Module
Page Title :	PSoC 6 Signals

Size	Document Number	Drawn By	Approved By	Rev
A4	630-60566-01	AARA	RKAD	02

Date: Thursday, September 26, 2019 Sheet 4 of 8

Supply for Type 1DX Module

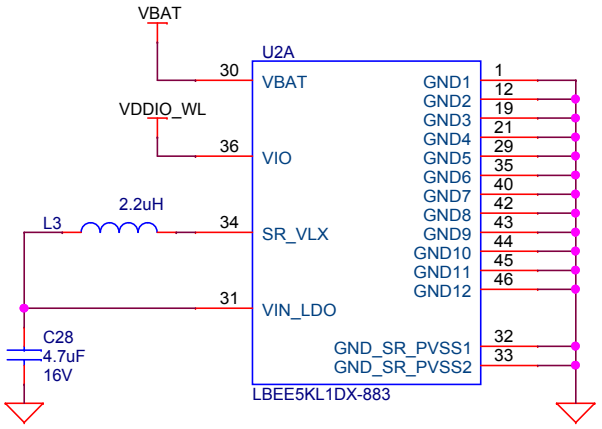

Decoupling Capacitors

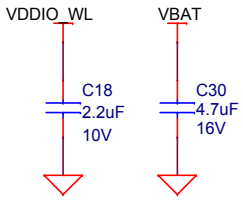

CYPRESS SEMICONDUCTOR
198 CHAMPION COURT
SAN JOSE, CA 95134
(408) 943-2600

CYPRESS SEMICONDUCTOR © 2019

SCH Title : PSoC 6 (512K) with CYW4343W Carrier Module

Page Title : LBEE5KL1DX Module Power

Size	Document Number	Drawn By	Approved By	Rev
A4	630-60566-01	AARA	RKAD	02

Date: Thursday, September 26, 2019 Sheet 5 of 8

Type 1DX Module Signals

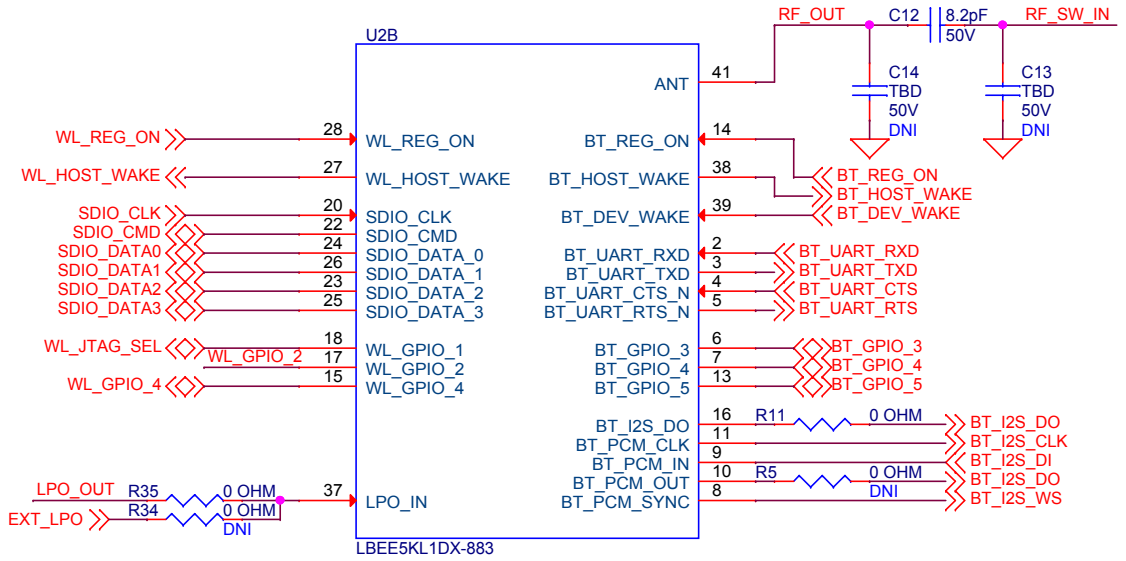

Antenna Diversity Switch

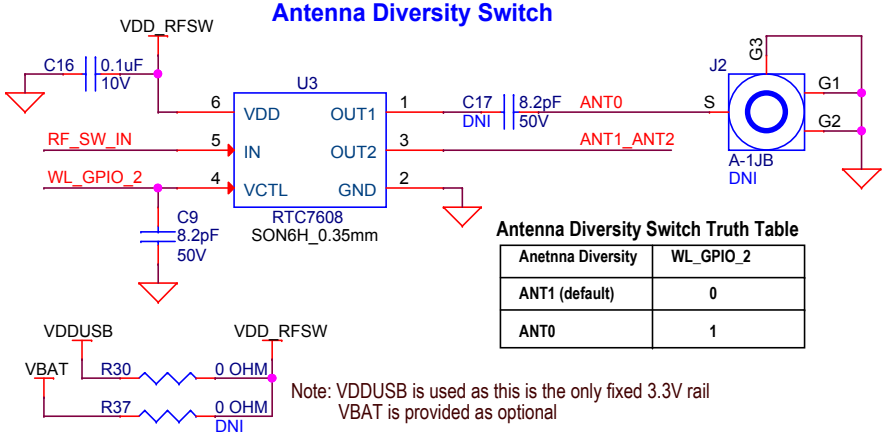

Antenna Diversity Switch Truth Table

Anetnna Diversity	WL_GPIO_2
ANT1 (default)	0
ANT0	1

Onboard LPO

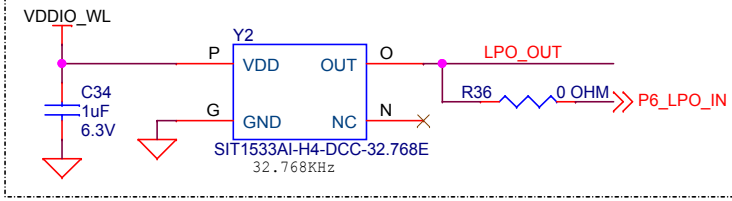

Antenna

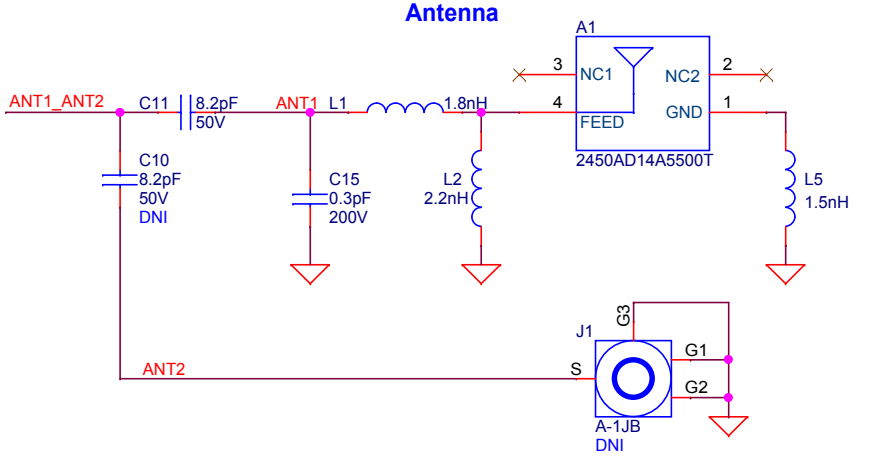

Pull-ups

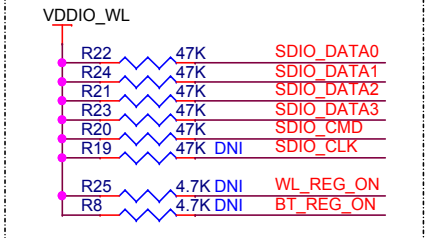

CYPRESS SEMICONDUCTOR
198 CHAMPION COURT
SAN JOSE, CA 95134
(408) 943-2600

CYPRESS SEMICONDUCTOR © 2019

SCH Title : PSoC 6 (512K) with CYW4343W Carrier Module

Page Title : LBEE5KL1DX Module Signals

Size	Document Number	Drawn By	Approved By	Rev
A4	630-60566-01	AARA	RKAD	02

Date: Thursday, September 26, 2019 Sheet 6 of 8

Carrier Module Footprint

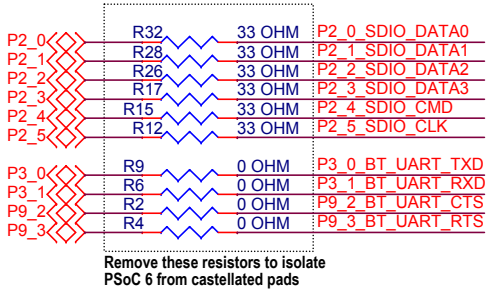

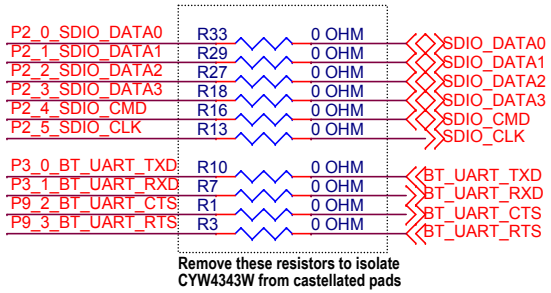

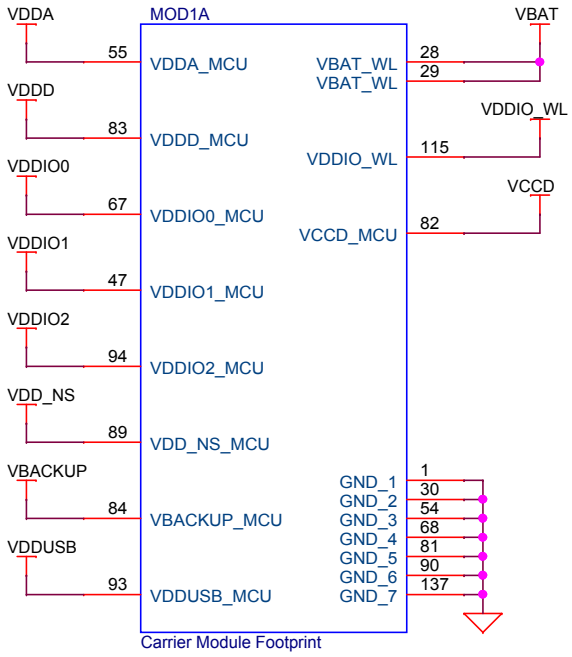

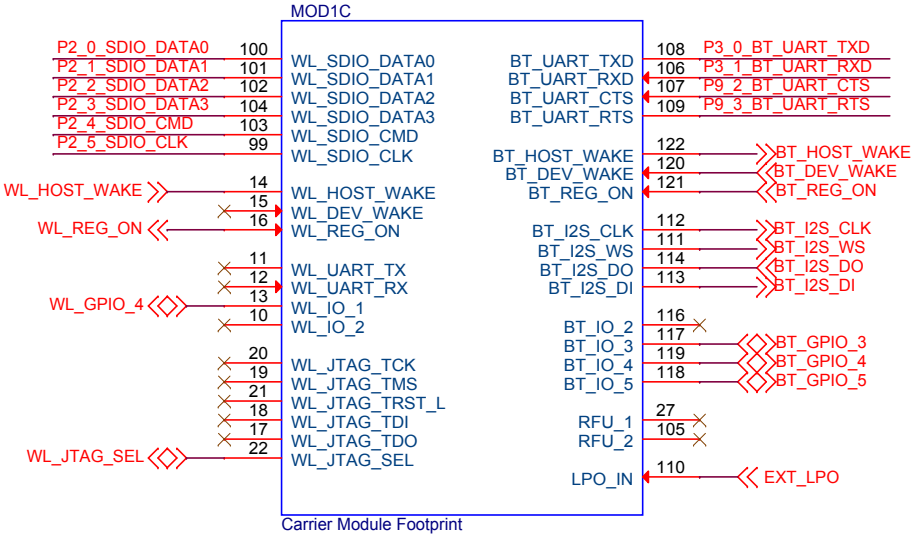

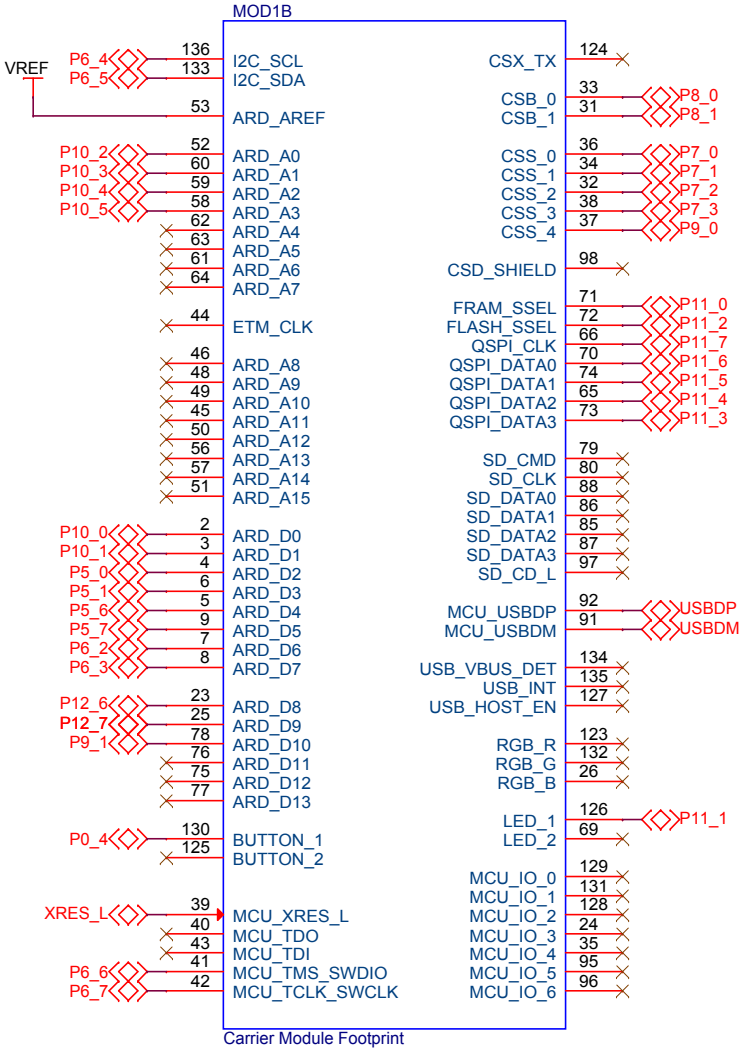

CYPRESS SEMICONDUCTOR
198 CHAMPION COURT
SAN JOSE, CA 95134
(408) 943-2600

CYPRESS SEMICONDUCTOR © 2019

SCH Title : PSoC 6 (512K) with CYW4343W Carrier Module				
Page Title : Interface to BaseBoard				
Size	Document Number	Drawn By	Approved By	Rev
A4	630-60566-01	AARA	RKAD	02
Date:	Thursday, September 26, 2019	Sheet	7 of 8	

REVISION HISTORY

REV	DESCRIPTION OF CHANGE	Orig. of Change	DATE
01	Internal Release	AARA	2019/07/24
02	Initial Release	AARA	2019/09/26

CYPRESS SEMICONDUCTOR
198 CHAMPION COURT
SAN JOSE, CA 95134
(408) 943-2600

CYPRESS SEMICONDUCTOR © 2019

SCH Title : PSoC 6 (512K) with CYW4343W Carrier Module

Page Title : Revision History

Size	Document Number	Drawn By	Approved By	Rev
A4	630-60566-01	AARA	RKAD	02

Date: Thursday, September 26, 2019 Sheet 8 of 8