CY8CMOD-062S2-43439 PSoC™ 6 with CYW43439 Wi-Fi Bluetooth® module

CONTENTS

PAGE	DESCRIPTION
01	Title, Table of Contents & Drawing Numbers
02	Block Diagram
03	PSoC™ 6 Power
04	PSoC™ 6 Signals
05	LBEE5KL1YN Module Power
06	LBEE5KL1YN Module Signals
07	Interface to BaseBoard
08	Revision History

Drawing Numbers

PCBA	121-60649-01
PCB	600-60649-01
FAB DRW	610-60649-01
ASSY DRW	620-60649-01
SCH DRW	630-60649-01

Legal Disclaimer :
The information given in this document shall in no event be regarded as a guarantee of conditions or characteristics. With respect to any examples or hints given herein, any typical values stated herein and/or any information regarding the application of the device, Infineon Technologies hereby disclaims any and all warranties and liabilities of any kind, including without limitation, warranties of non-infringement of intellectual property rights of any third party.

SCH Title : PSoC™ 6 with CYW43439 Wi-Fi Bluetooth® module				
Page Title: Title Page				
Size	Document Number	Drawn By	Approved By	Rev
A4	630-60649-01	RINKU	RONAK	01
Date: Thursday, February 02, 2023		Sheet 1 of 8		

Block Diagram

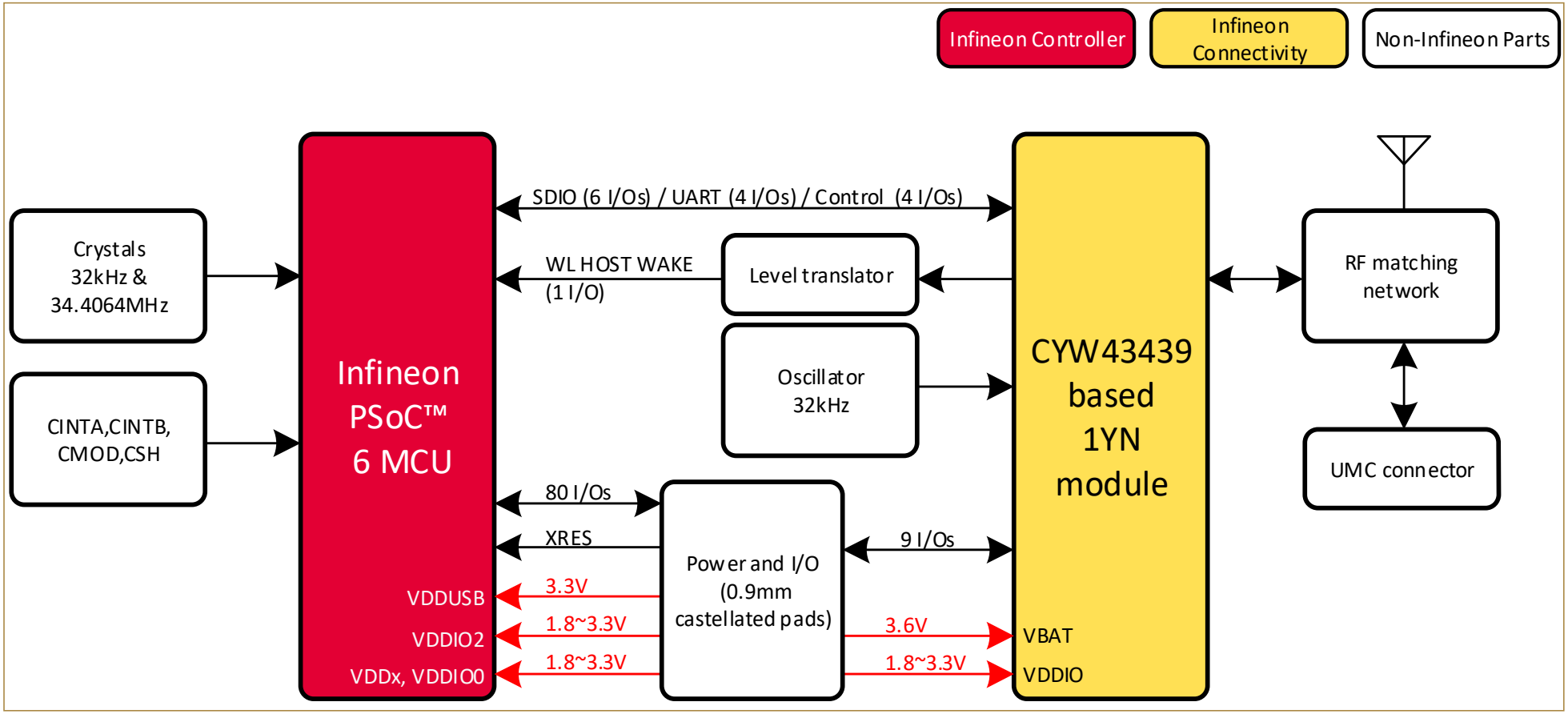

Legal Disclaimer :
The information given in this document shall in no event be regarded as a guarantee of conditions or characteristics. With respect to any examples or hints given herein, any typical values stated herein and/or any information regarding the application of the device, Infineon Technologies hereby disclaims any and all warranties and liabilities of any kind, including without limitation, warranties of non-infringement of intellectual property rights of any third party.

SCH Title : PSoC™ 6 with CYW43439 Wi-Fi Bluetooth® module				
Page Title: Block Diagram				
Size	Document Number	Drawn By	Approved By	Rev
A4	630-60649-01	RINKU	RONAK	01
Date: Thursday, February 02, 2023		Sheet 2 of 8		

PSoC™ 6 Power IN

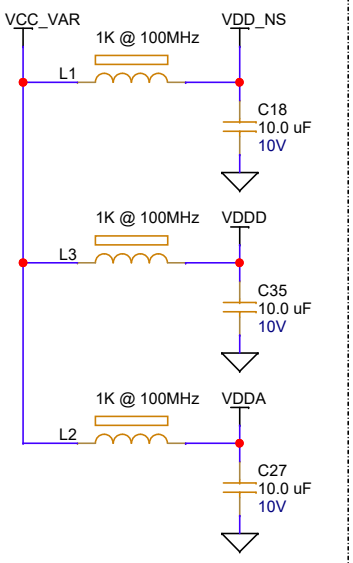

Supply for PSoC™ 6

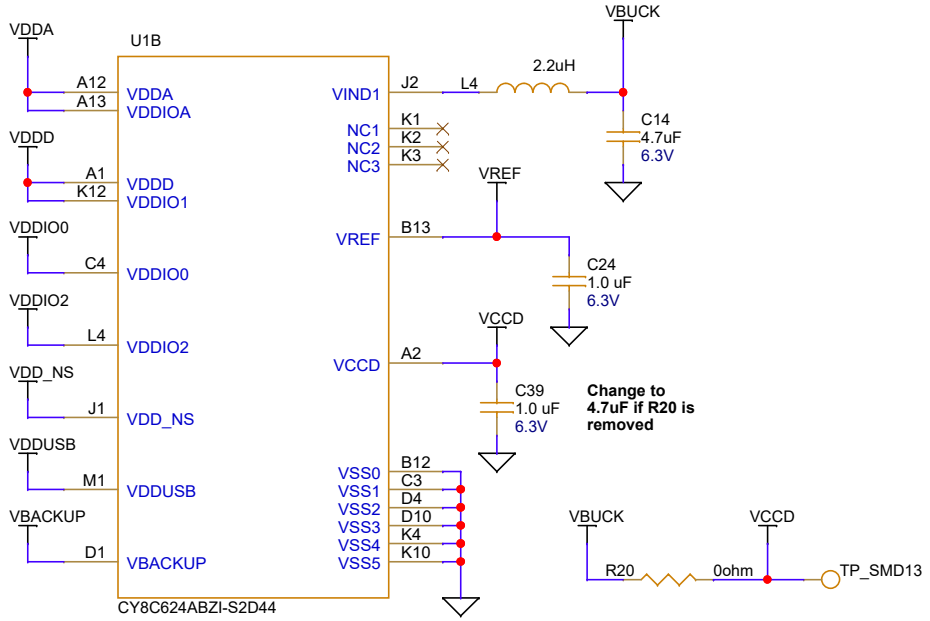

Decoupling Capacitors

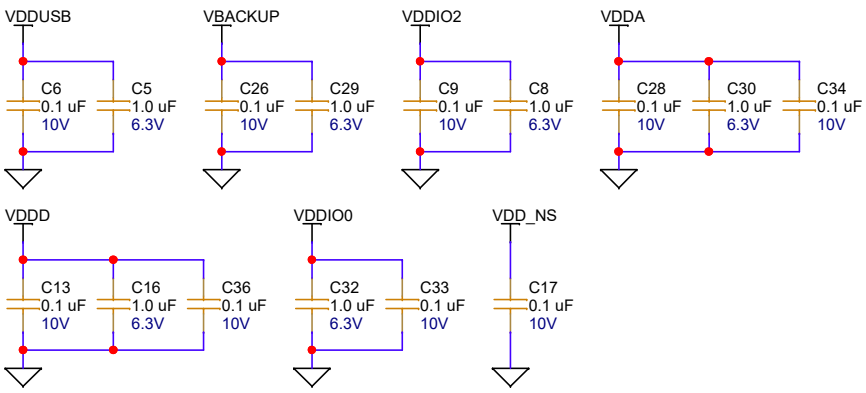

Legal Disclaimer :
The information given in this document shall in no event be regarded as a guarantee of conditions or characteristics. With respect to any examples or hints given herein, any typical values stated herein and/or any information regarding the application of the device, Infineon Technologies hereby disclaims any and all warranties and liabilities of any kind, including without limitation, warranties of non-infringement of intellectual property rights of any third party.

SCH Title : PSoC™ 6 with CYW43439 Wi-Fi Bluetooth® module				
Page Title: PSoC™ 6 Power				
Size	Document Number	Drawn By	Approved By	Rev
A4	630-60649-01	RINKU	RONAK	01
Date: Thursday, February 02, 2023		Sheet 3 of 8		

PSoC™ 6 Signals

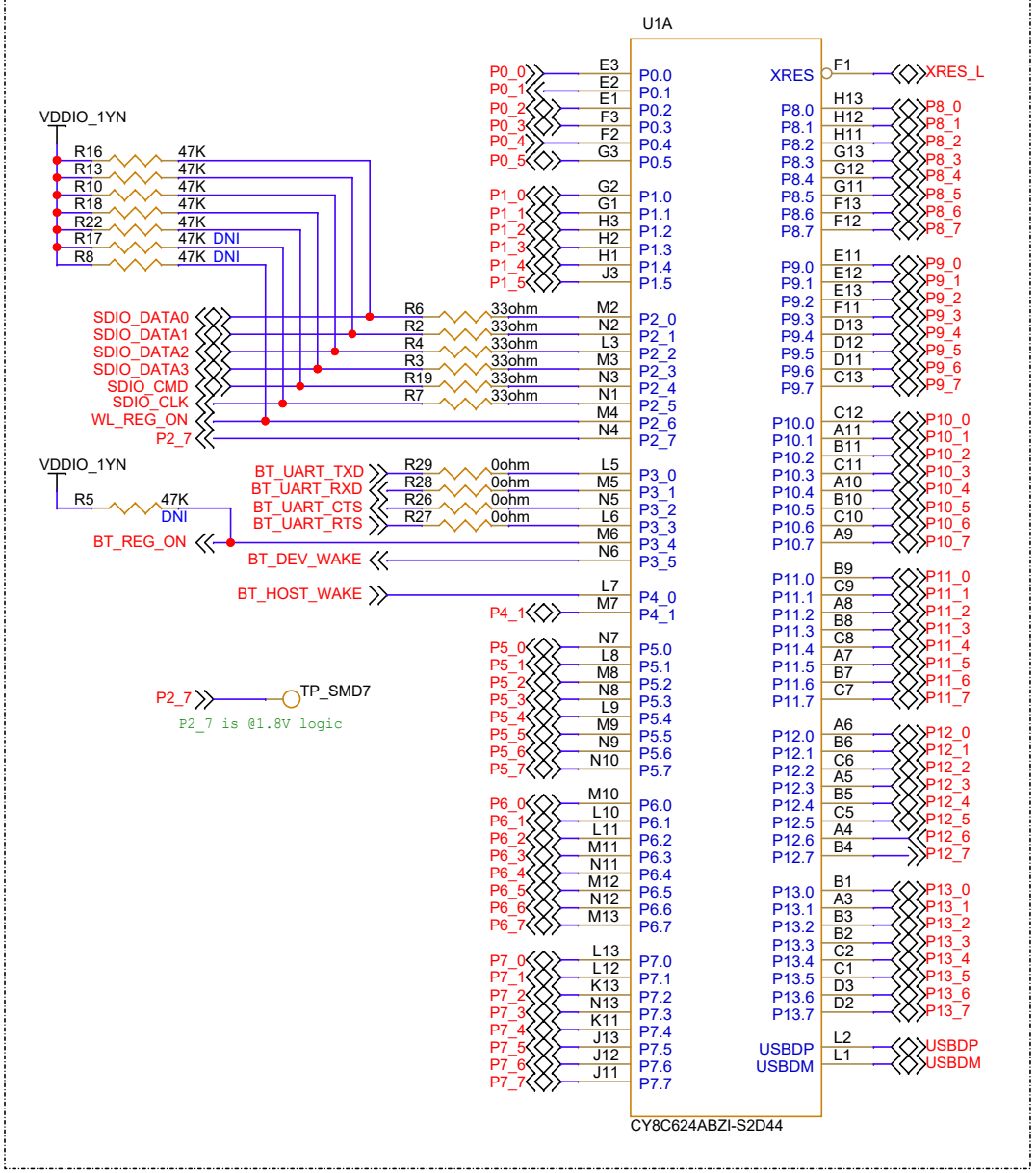

Reset

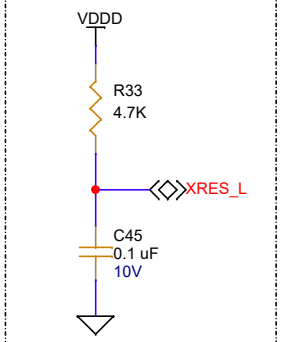

WCO

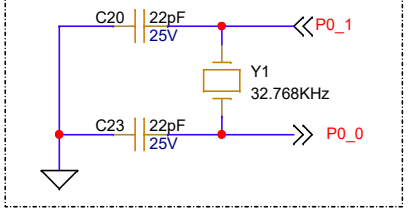

ECO

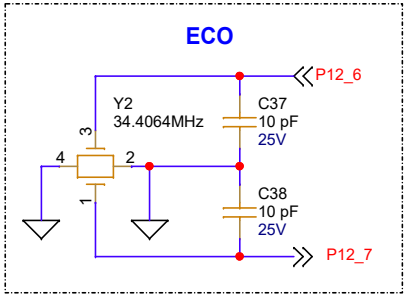

CMOD, CSH & CINT

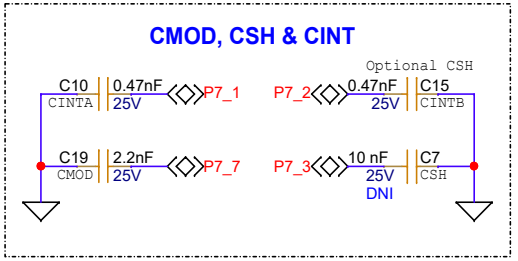

Legal Disclaimer :
The information given in this document shall in no event be regarded as a guarantee of conditions or characteristics. With respect to any examples or hints given herein, any typical values stated herein and/or any information regarding the application of the device, Infineon Technologies hereby disclaims any and all warranties and liabilities of any kind, including without limitation, warranties of non-infringement of intellectual property rights of any third party.

SCH Title : PSoC™ 6 with CYW43439 Wi-Fi Bluetooth® module				
Page Title: PSoC™ 6 Signals				
Size	Document Number	Drawn By	Approved By	Rev
A4	630-60649-01	RINKU	RONAK	01
Date: Thursday, February 02, 2023		Sheet 4 of 8		

Supply for 1YN Module

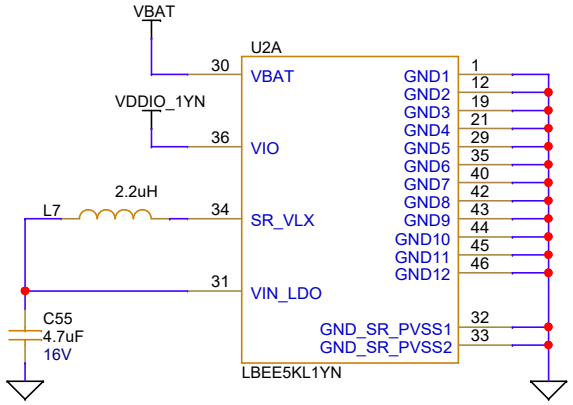

Decoupling Capacitors

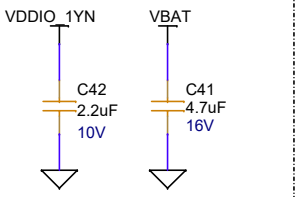

Legal Disclaimer :
The information given in this document shall in no event be regarded as a guarantee of conditions or characteristics. With respect to any examples or hints given herein, any typical values stated herein and/or any information regarding the application of the device, Infineon Technologies hereby disclaims any and all warranties and liabilities of any kind, including without limitation, warranties of non-infringement of intellectual property rights of any third party.

SCH Title : PSoC™ 6 with CYW43439 Wi-Fi Bluetooth® module				
Page Title: LBEE5KL1YN Module Power				
Size	Document Number	Drawn By	Approved By	Rev
A4	630-60649-01	RINKU	RONAK	01
Date: Thursday, February 02, 2023		Sheet 5 of 8		

1YN Module Signals

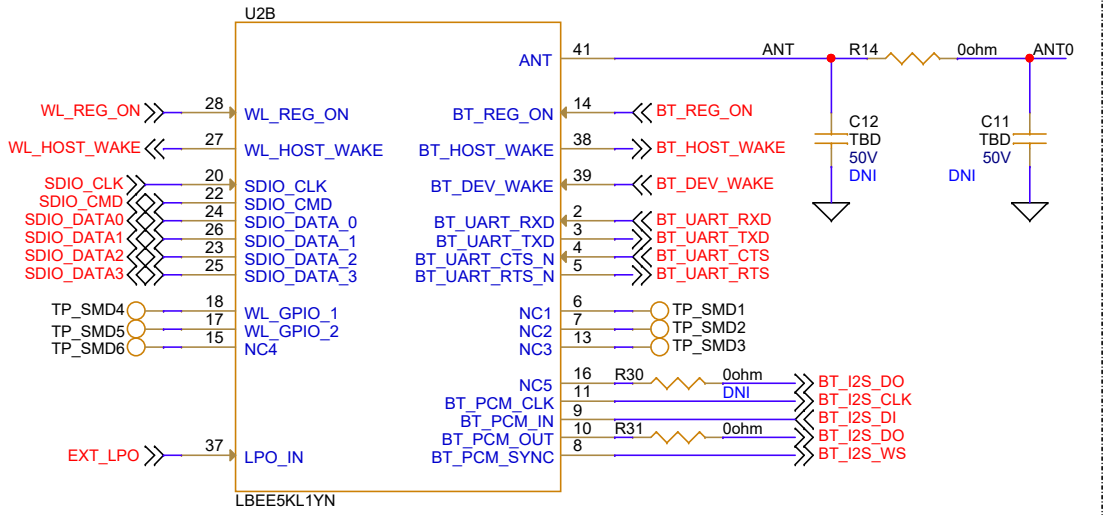

Antenna

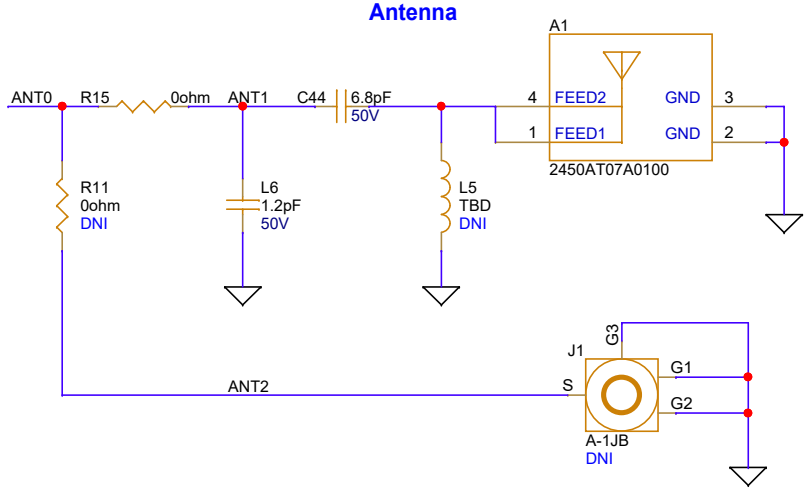

Level Shifter for WL Host wake

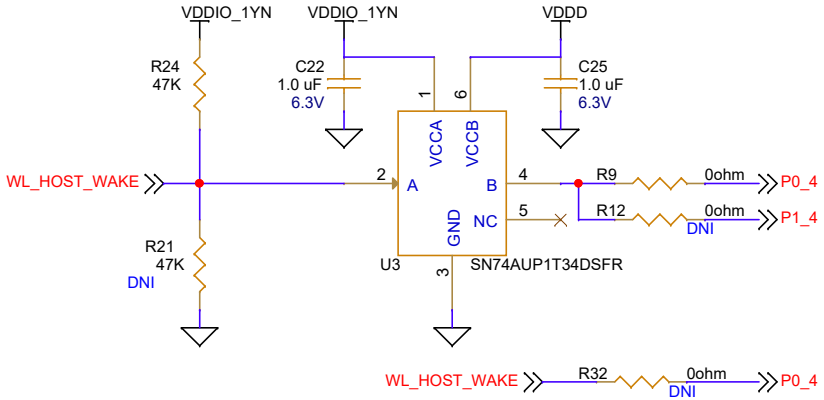

External LPO

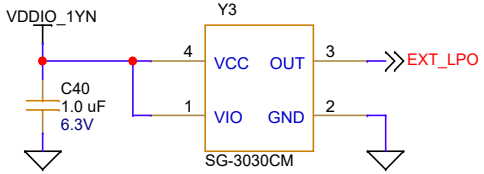

Legal Disclaimer :
The information given in this document shall in no event be regarded as a guarantee of conditions or characteristics. With respect to any examples or hints given herein, any typical values stated herein and/or any information regarding the application of the device, Infineon Technologies hereby disclaims any and all warranties and liabilities of any kind, including without limitation, warranties of non-infringement of intellectual property rights of any third party.

SCH Title : PSoC™ 6 with CYW43439 Wi-Fi Bluetooth® module				
Page Title: LBEE5KL1YN Module Signals				
Size	Document Number	Drawn By	Approved By	Rev
A4	630-60649-01	RINKU	RONAK	01
Date: Thursday, February 02, 2023		Sheet 6 of 8		

Pins for castellated PADs

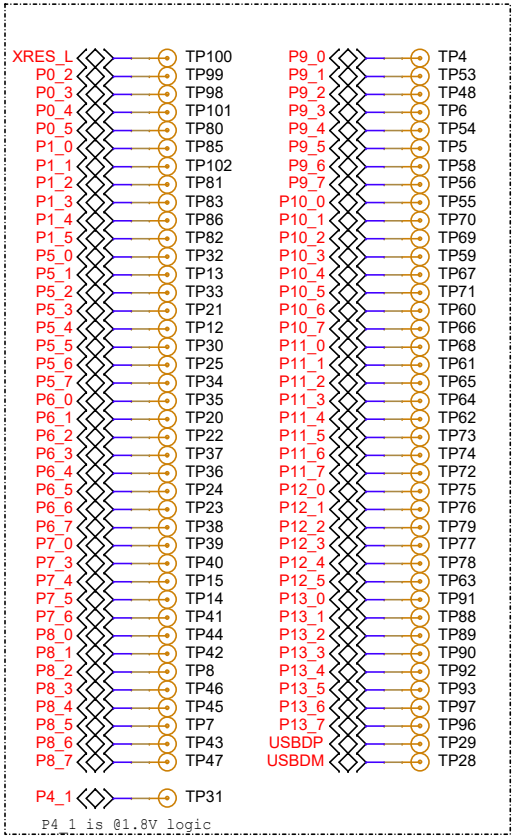

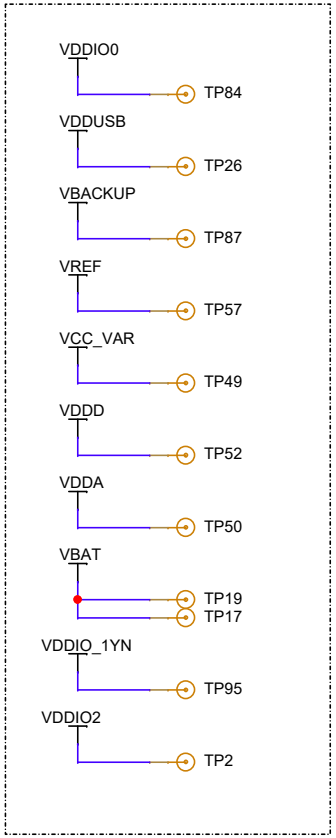

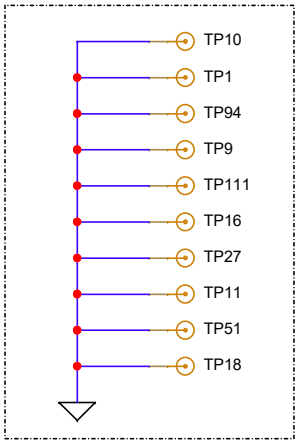

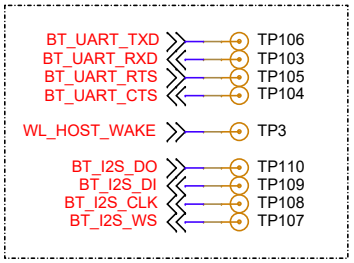

Pins arrangement for castellated PADs

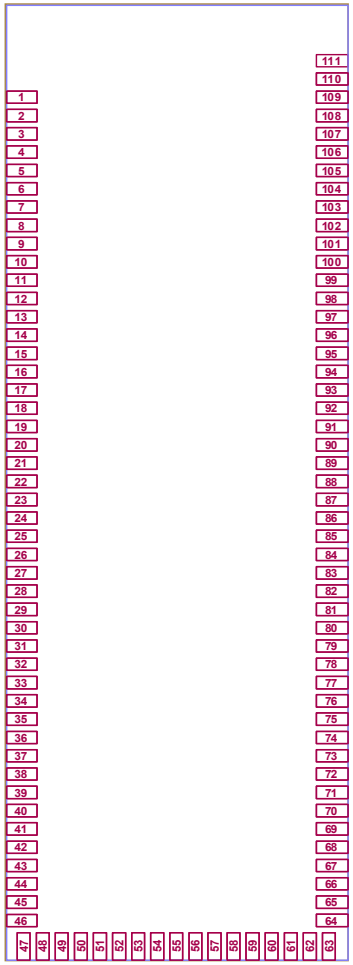

Legal Disclaimer :
The information given in this document shall in no event be regarded as a guarantee of conditions or characteristics. With respect to any examples or hints given herein, any typical values stated herein and/or any information regarding the application of the device, Infineon Technologies hereby disclaims any and all warranties and liabilities of any kind, including without limitation, warranties of non-infringement of intellectual property rights of any third party.

SCH Title : PSoC™ 6 with CYW43439 Wi-Fi Bluetooth® module				
Page Title: Interface to BaseBoard				
Size	Document Number	Drawn By	Approved By	Rev
A4	630-60649-01	RINKU	RONAK	01
Date: Thursday, February 02, 2023		Sheet 7 of 8		

REVISION HISTORY

REV	DESCRIPTION OF CHANGE	DATE
01	Initial release	27-Oct-2022

Legal Disclaimer :
The information given in this document shall in no event be regarded as a guarantee of conditions or characteristics. With respect to any examples or hints given herein, any typical values stated herein and/or any information regarding the application of the device, Infineon Technologies hereby disclaims any and all warranties and liabilities of any kind, including without limitation, warranties of non-infringement of intellectual property rights of any third party.

SCH Title : PSoC™ 6 with CYW43439 Wi-Fi Bluetooth® module

Page Title: Revision History

Size	Document Number	Drawn By	Approved By	Rev
A4	630-60649-01	RINKU	RONAK	01

Date: Thursday, February 02, 2023 Sheet 8 of 8