CY8CKIT-148 PSoC 4700S Inductive Sensing Evaluation Kit

CONTENTS

PAGE	DESCRIPTION
01	Title, Table of Contents & Drawing Numbers
02	Block Diagram
03	KitProg2 Schematics
04	PSoC 4700S
05	Inductive Sensing Interface
06	Accesories
07	Revision History

Drawing Numbers	
PCBA	121-60503-01
PCB	600-60503-01
FAB DRW	610-60503-01
ASSY DRW	620-60503-01
SCH DRW	630-60503-01

CYPRESS SEMICONDUCTOR
198 CHAMPION COURT
SAN JOSE, CA 95134
(408) 943-2600

CYPRESS SEMICONDUCTOR © 2018

SCH Title : CY8CKIT-148 PSoC 4700S Inductive Sensing Evaluation Kit

Page Title : Title Page

Size	Document Number	Drawn By	Approved By	Rev
A4	630-60503-01	NMIT	RKAD	05

Date: Wednesday, May 30, 2018 | Sheet 1 of 7

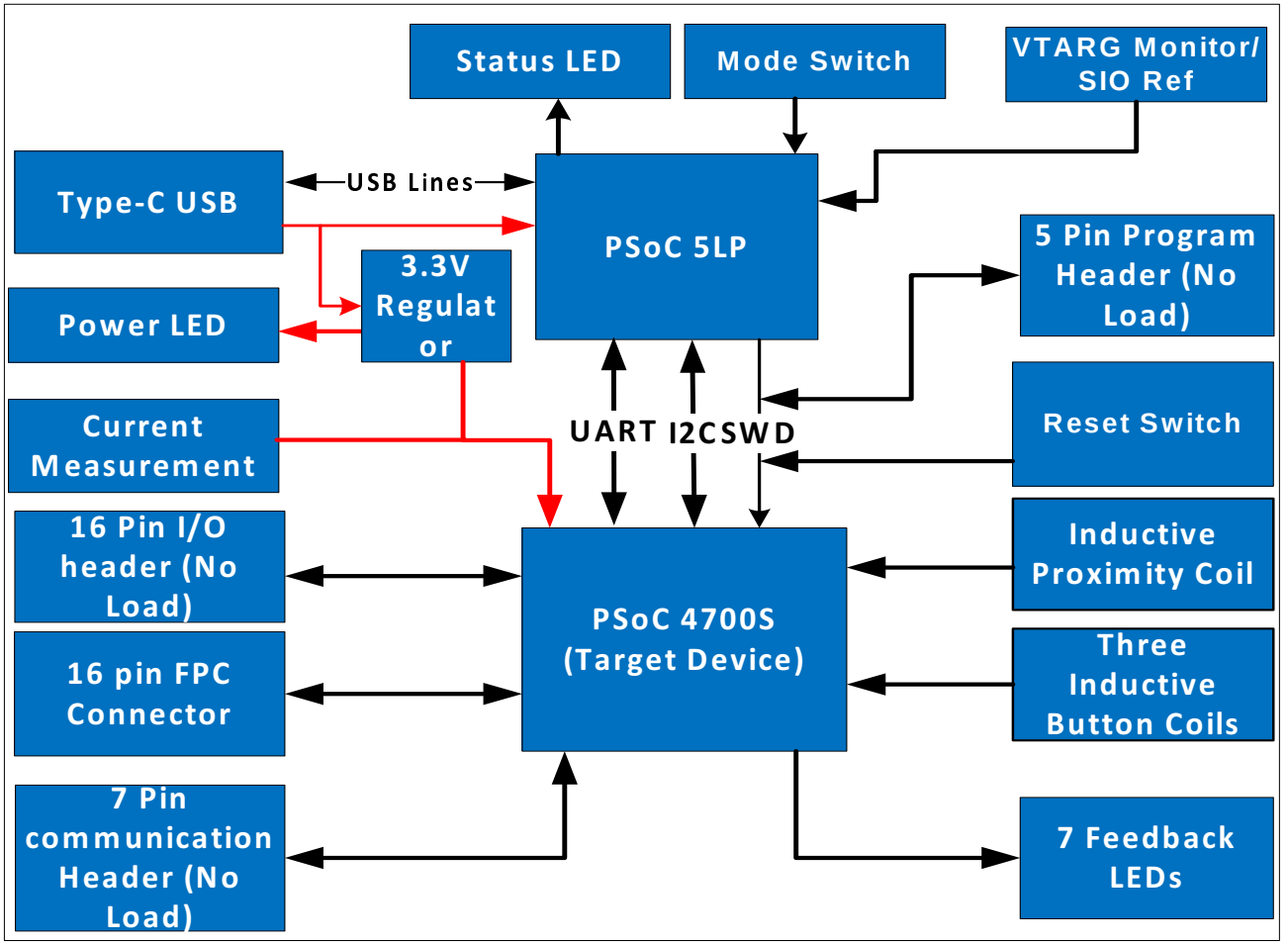

CYPRESS SEMICONDUCTOR
198 CHAMPION COURT
SAN JOSE, CA 95134
(408) 943-2600

CYPRESS SEMICONDUCTOR © 2018

SCH Title : CY8CKIT-148 PSoC 4700S Inductive Sensing Evaluation Kit

Page Title : Block Diagram

Size	Document Number	Drawn By	Approved By	Rev
A4	630-60503-01	NMIT	RKAD	05

Date: Tuesday, June 05, 2018 Sheet 2 of 7

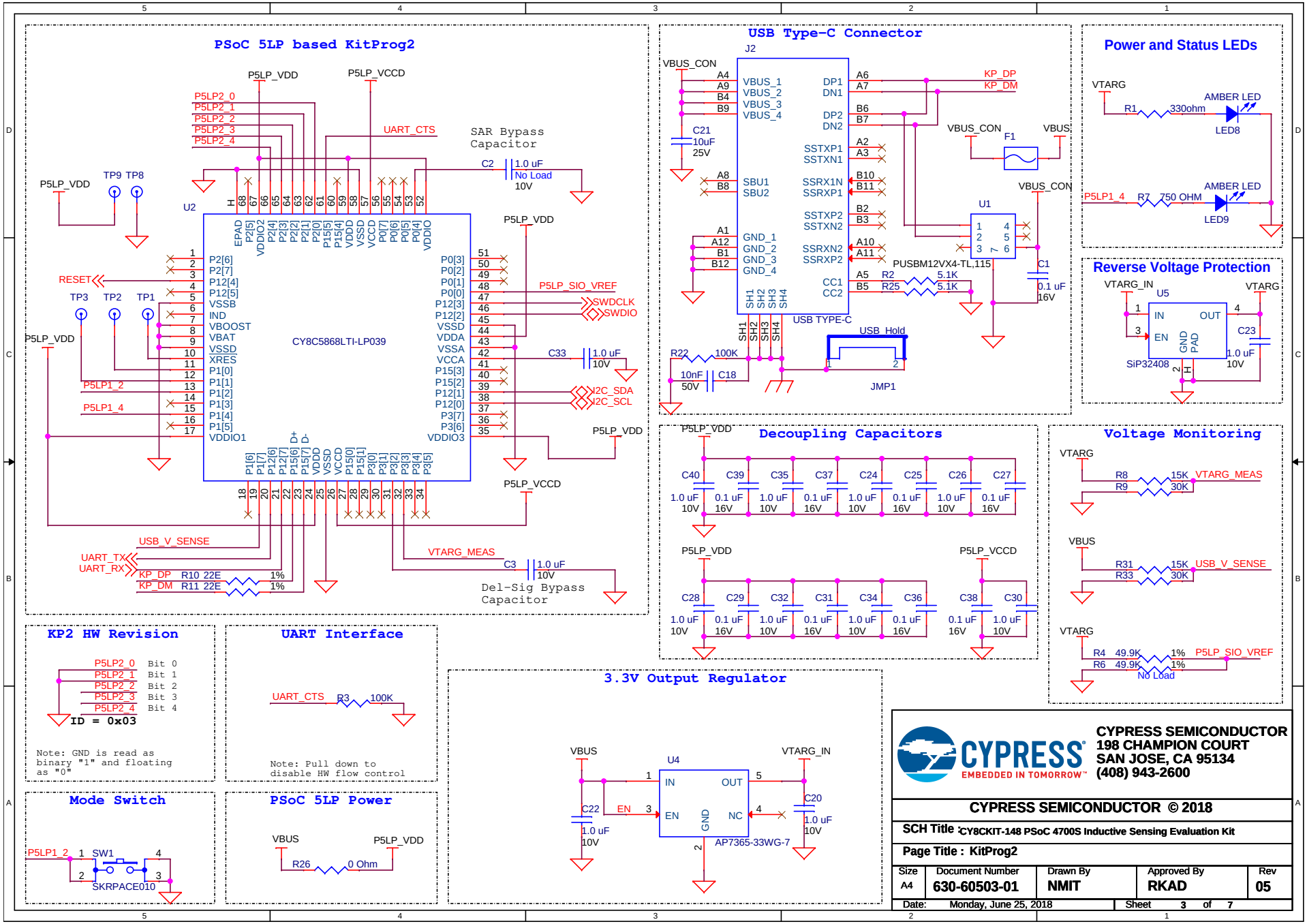
PSoC 5LP based KitProg2
CY8C5868LTI-LP039
SAR Bypass Capacitor
Del-Sig Bypass Capacitor
USB Type-C Connector
USB TYPE-C
USB_Hold
JMP1
PUSBM12VX4-TL,115
Power and Status LEDs
AMBER LED
LED8
LED9
Reverse Voltage Protection
SiP32408
Decoupling Capacitors
Voltage Monitoring
KP2 HW Revision
ID = 0x03
UART Interface
3.3V Output Regulator
AP7365-33WG-7
Mode Switch
SKRPACE010
PSoC 5LP Power
CYPRESS SEMICONDUCTOR
198 CHAMPION COURT
SAN JOSE, CA 95134
(408) 943-2600
CYPRESS SEMICONDUCTOR © 2018
SCH Title : CY8CKIT-148 PSoC 4700S Inductive Sensing Evaluation Kit
Page Title : KitProg2
Size A4
Document Number 630-60503-01
Drawn By NMIT
Approved By RKAD
Rev 05
Date: Monday, June 25, 2018
Sheet 3 of 7

PSoC 4700S Device

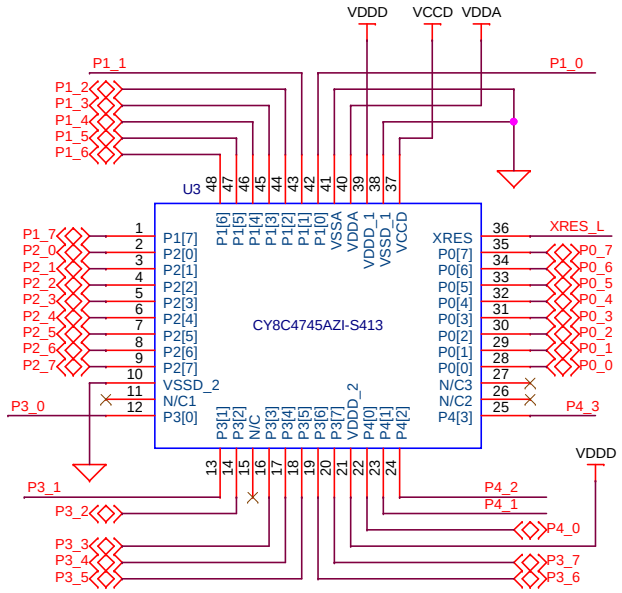

Test Points*

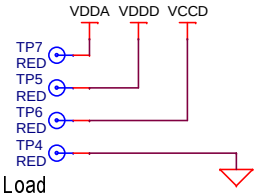

*All Test Points are No Load

Target Program/Debug Connector

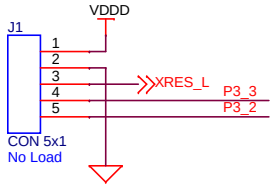

I2C Pull Ups

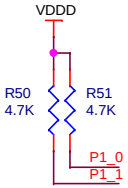

System Capacitors

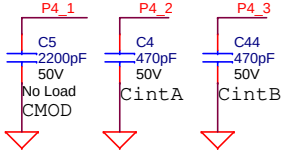

IO Header

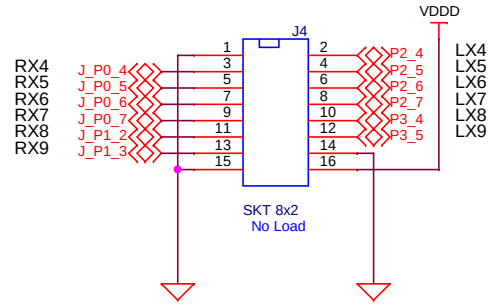

Communication And Programming Lines

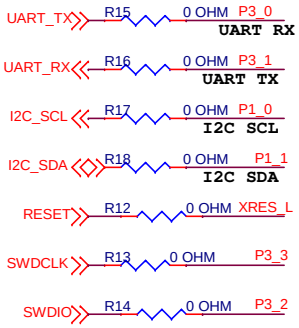

Coupling Capacitors for RX

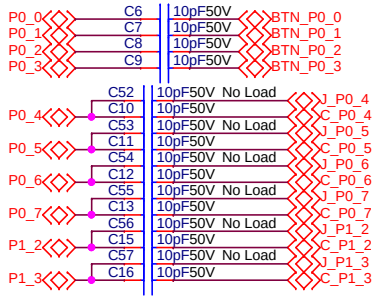

Communication Header

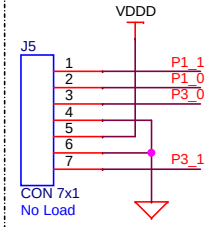

Current Measurement

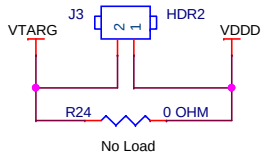

Voltage Distribution

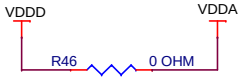

Decoupling Capacitors

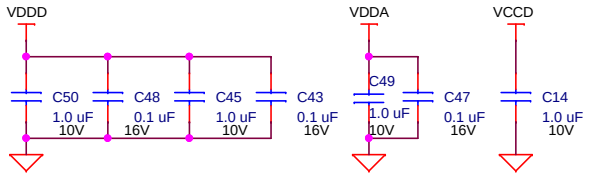

Reset

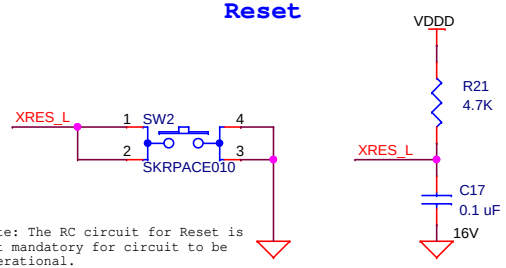

Note: The RC circuit for Reset is not mandatory for circuit to be operational.

CYPRESS SEMICONDUCTOR
198 CHAMPION COURT
SAN JOSE, CA 95134
(408) 943-2600

CYPRESS SEMICONDUCTOR © 2018

SCH Title : CY8CKIT-148 PSoC 4700S Inductive Sensing Evaluation Kit				
Page Title : PSoC 4700S				
Size: A4	Document Number: 630-60503-01	Drawn By: NMIT	Approved By: RKAD	Rev: 05
Date: Monday, June 25, 2018		Sheet 4 of 7		

Inductive Button Coil (Sensor 1)

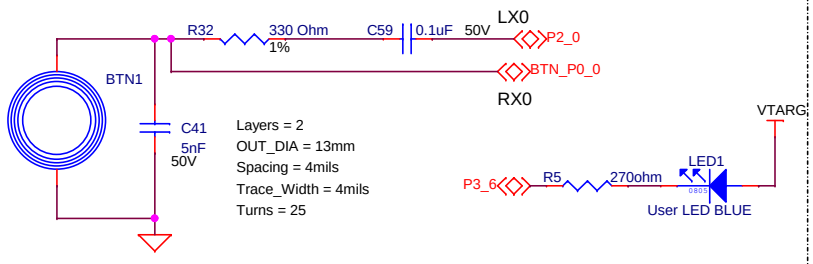

Sensor 1 Feedback LED

Inductive Button Coil (Sensor 2)

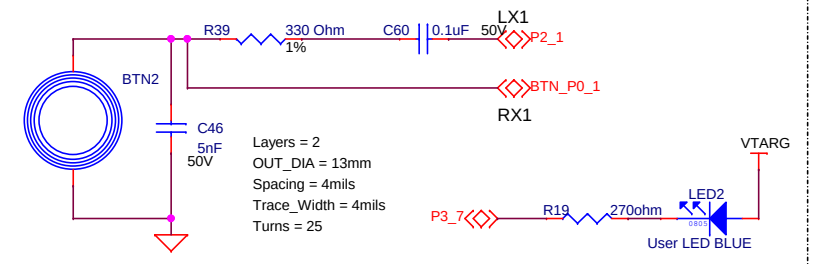

Sensor 2 Feedback LED

Inductive Button Coil (Sensor 3)

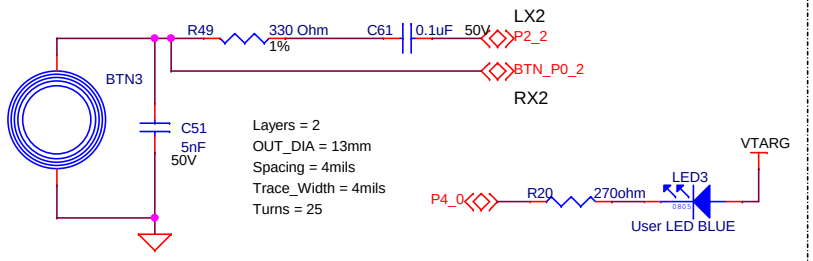

Sensor 3 Feedback LED

PROXIMITY SENSOR COIL

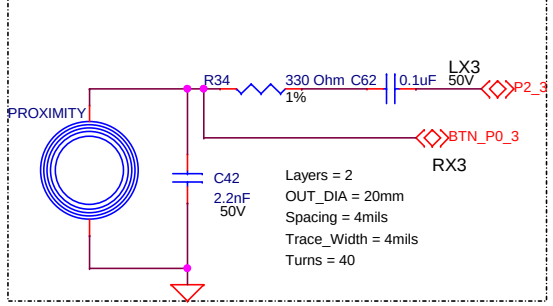

Proximity Feedback LEDs

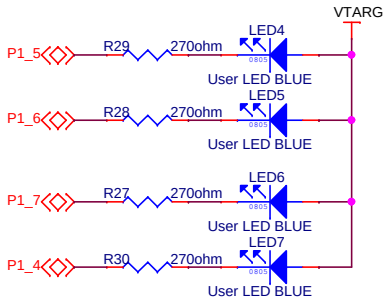

FPC Connector

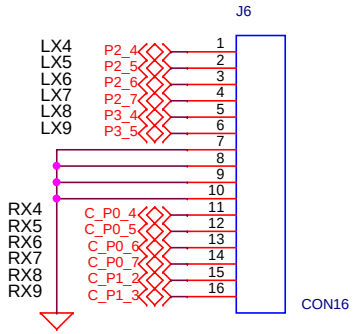

Recommended FPC cable for this connector : 0152660165

CYPRESS SEMICONDUCTOR
198 CHAMPION COURT
SAN JOSE, CA 95134
(408) 943-2600

CYPRESS SEMICONDUCTOR © 2018

SCH Title : CY8CKIT-148 PSoC 4700S Inductive Sensing Evaluation Kit

Page Title : Inductive Sensing Interface

Size	Document Number	Drawn By	Approved By	Rev
A4	630-60503-01	NMIT	RKAD	05

Date: Thursday, June 07, 2018 Sheet 5 of 7

Accessories

Cylindrical Bumpons

SJ61A4 SJ61A4

SJ61A4 SJ61A4

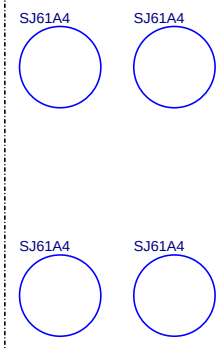

Aluminium Overlay

Aluminium Overlay

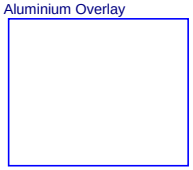

USB Type C Cable

USB Type C Cable

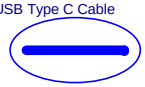

PCBA label

LBL PCA Label LBL QR Code



Metal Target

Aluminium Coin

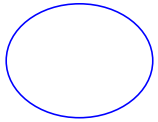

SPC02SYAN

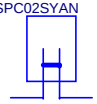

USB_Hold



CYPRESS SEMICONDUCTOR
198 CHAMPION COURT
SAN JOSE, CA 95134
(408) 943-2600

CYPRESS SEMICONDUCTOR © 2018

SCH Title : CY8CKIT-148 PSoC 4700S Inductive Sensing Evaluation Kit				
Page Title : Accesories				
Size	Document Number	Drawn By	Approved By	Rev
A4	630-60503-01	NMIT	RKAD	05
Date: Wednesday, May 30, 2018		Sheet 6 of 7		

REVISION HISTORY

Rev	DESCRIPTION	DATE
01	Prototyping Kit Version	1/2/2018
02	Embedded World Release	1/3/2018
03	Definition Changed. Prototyping Kit version for new definition	1/4/2018
04	Beta Release	5/8/2018
05	Public Release v1	5/28/2018

CYPRESS SEMICONDUCTOR
198 CHAMPION COURT
SAN JOSE, CA 95134
(408) 943-2600

CYPRESS SEMICONDUCTOR © 2018

SCH Title : CY8CKIT-148 PSoC 4700S Inductive Sensing Evaluation Kit

Page Title : Revision History

Size	Document Number	Drawn By	Approved By	Rev
A4	630-60503-01	NMIT	RKAD	05

Date: Monday, May 28, 2018 Sheet 7 of 7