CY8CKIT-147 PSoC 4100PS Prototyping Kit

CONTENTS

PAGE	DESCRIPTION
01	Title, Table of Contents & Drawing Numbers
02	Block Diagram
03	KitProg2
04	PSoC 4100PS
05	Revision History

Drawing Numbers

PCBA	121-60404-01
PCB	600-60411-01
FAB DRW	610-60360-01
ASSY DRW	620-60368-01
SCH DRW	630-60382-01

CYPRESS SEMICONDUCTOR
198 CHAMPION COURT
SAN JOSE, CA 95134
(408) 943-2600

CYPRESS SEMICONDUCTOR © 2017

SCH Title : CY8CKIT-147 PSoC 4100PS Prototyping Kit

Page Title : Title Page

Size	Document Number	Drawn By	Approved By	Rev
A4	630-60382-01	NMIT	RKAD	03

Date: Friday, March 17, 2017 Sheet 1 of 5

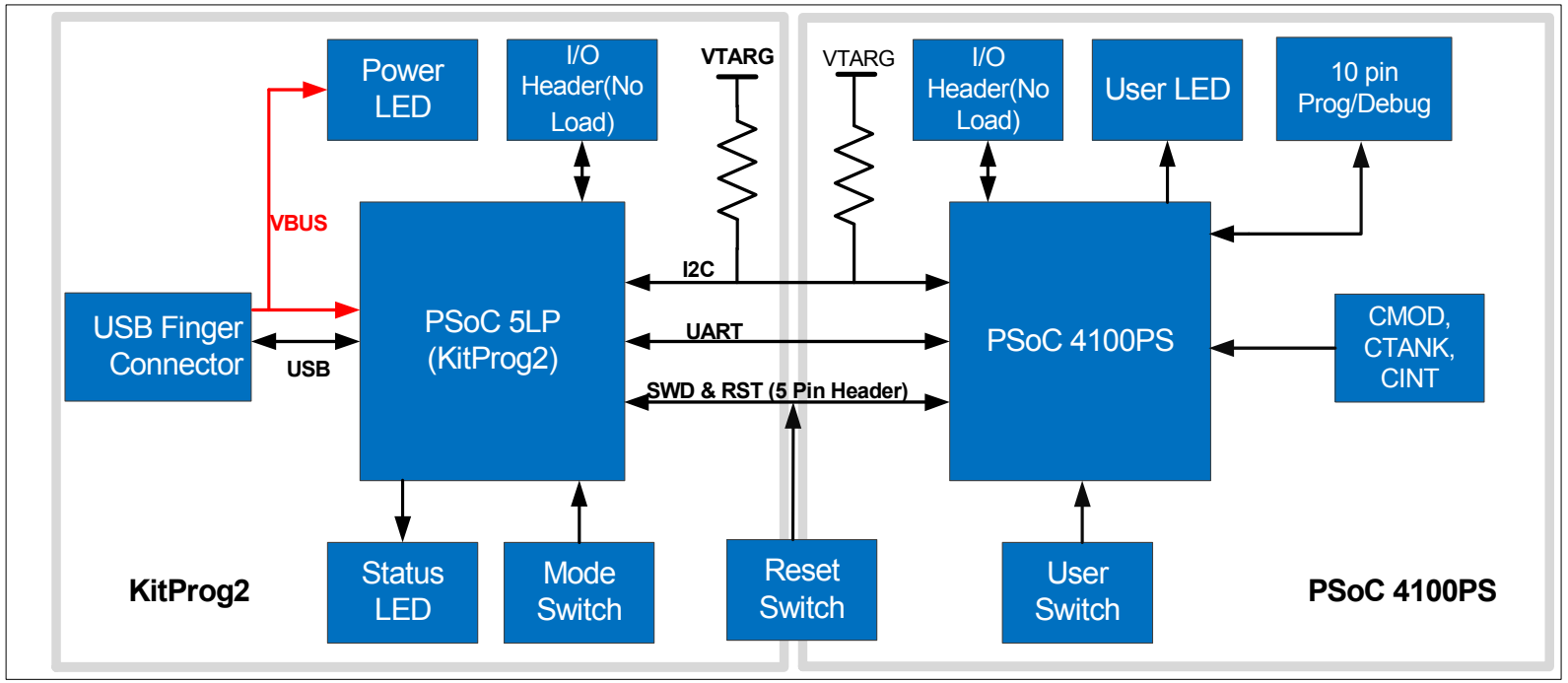

CYPRESS SEMICONDUCTOR
198 CHAMPION COURT
SAN JOSE, CA 95134
(408) 943-2600

CYPRESS SEMICONDUCTOR © 2017

SCH Title : CY8CKIT-147 PSoC 4100PS Prototyping Kit

Page Title : Block Diagram

Size	Document Number	Drawn By	Approved By	Rev
A4	630-60382-01	NMIT	RKAD	03

Date: Friday, March 17, 2017 Sheet 2 of 5

PSoC 5LP based KitProg2

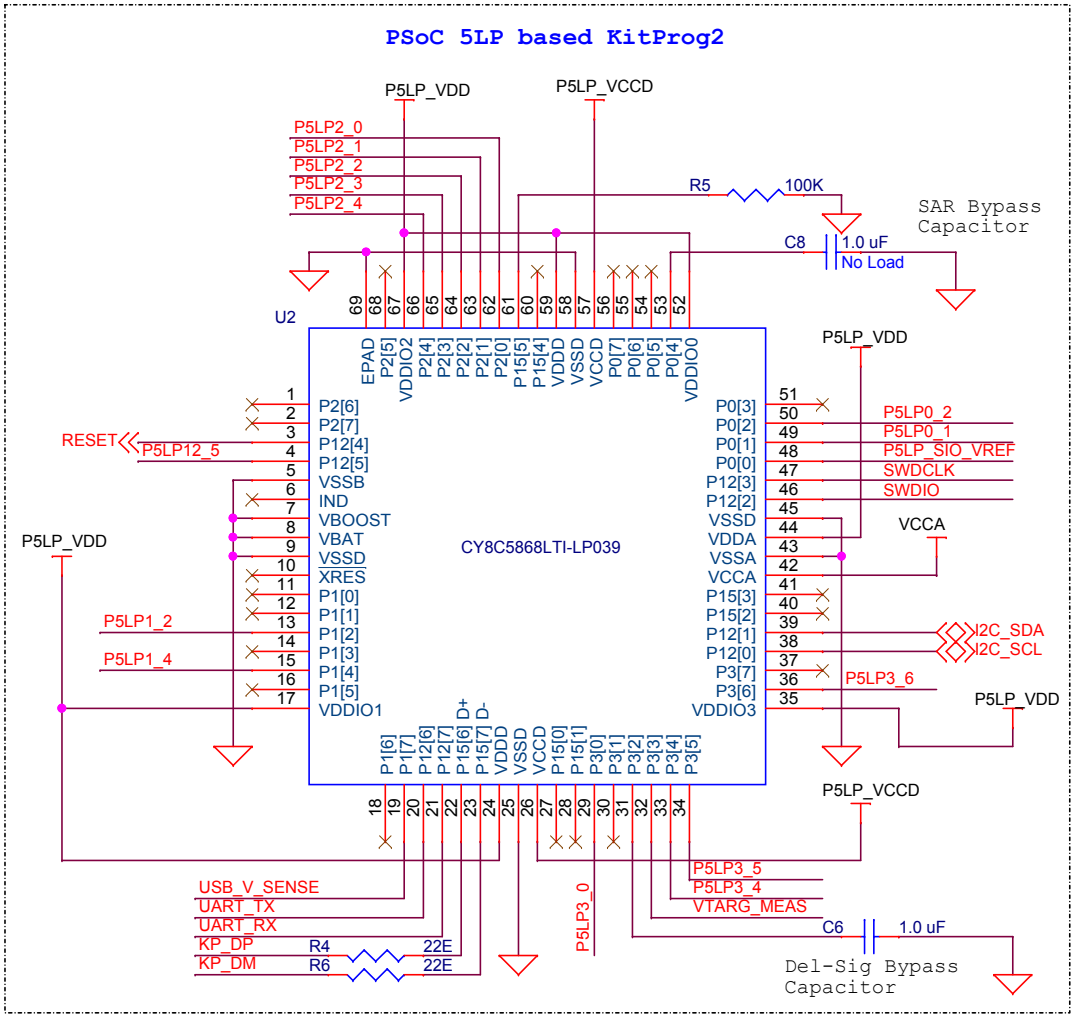

Decoupling Capacitors

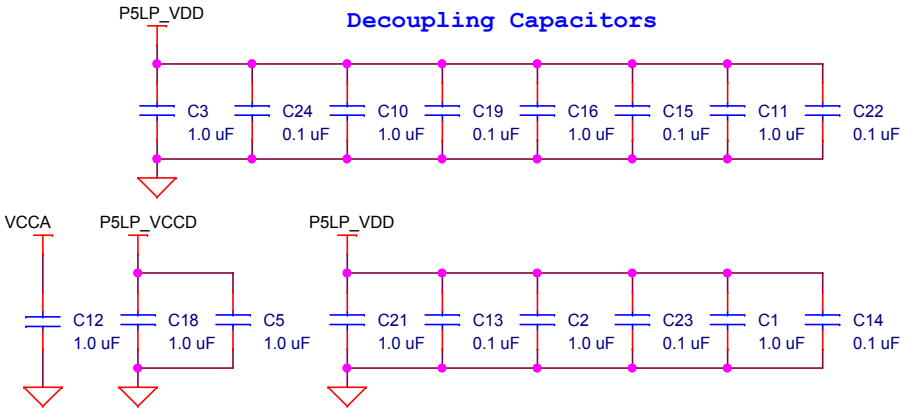

PSoC 5LP Status LED

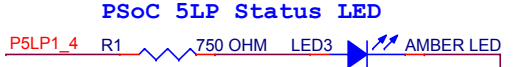

Power LED

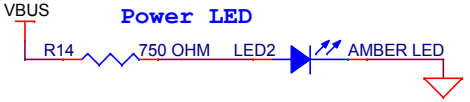

Voltage Monitoring

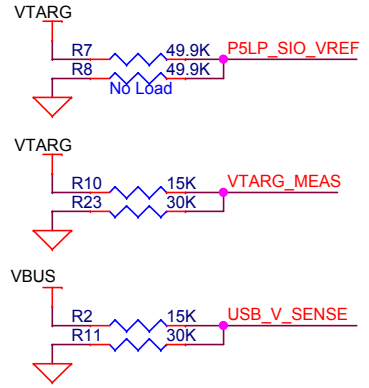

KitProg2 I/O Connectors

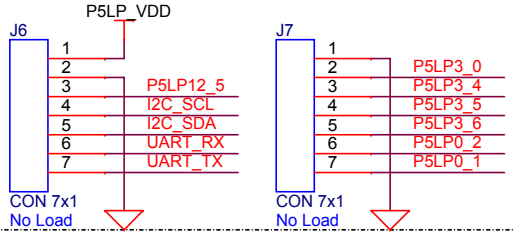

PSoC 5LP Power

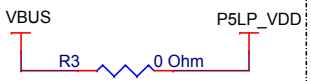

Target Power

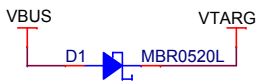

I2C Interface

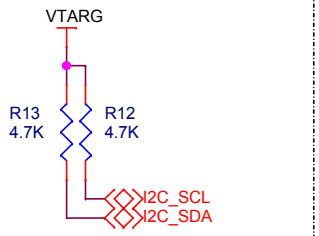

UART Interface



USB Finger Connector

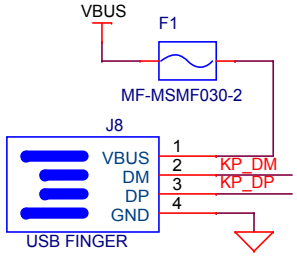

Target PSoC Program/ Debug Connector

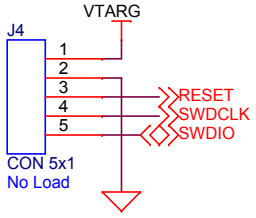

Mode Switch

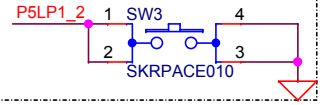

KitProg2 HW Revision

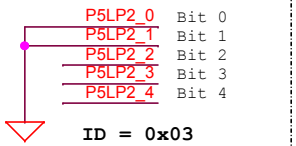

Note: GND is read as binary "1" and floating as "0"

CYPRESS SEMICONDUCTOR
198 CHAMPION COURT
SAN JOSE, CA 95134
(408) 943-2600

CYPRESS SEMICONDUCTOR © 2017

SCH Title : CY8CKIT-147 PSoC 4100PS Prototyping Kit				
Page Title : KitProg 2				
Size A4	Document Number 630-60382-01	Drawn By NMIT	Approved By RKAD	Rev 03
Date: Friday, March 17, 2017		Sheet 3 of 5		

PSoC 4100PS

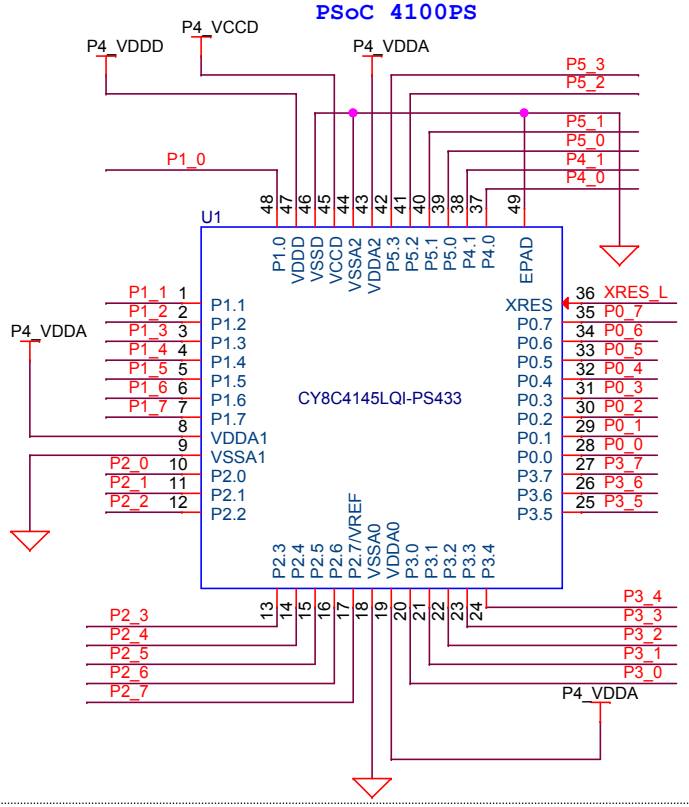

Communication and Reset Lines between P5LP and Target

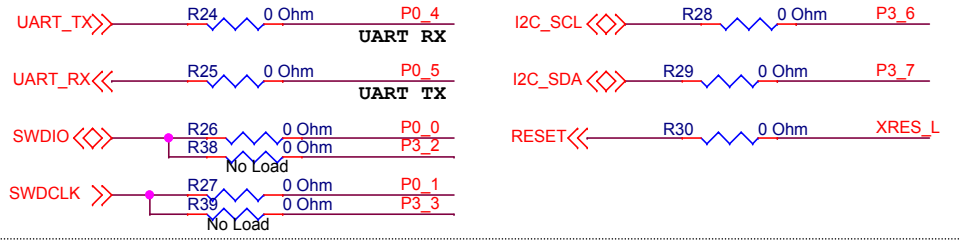

PSoC 4100PS IO Headers

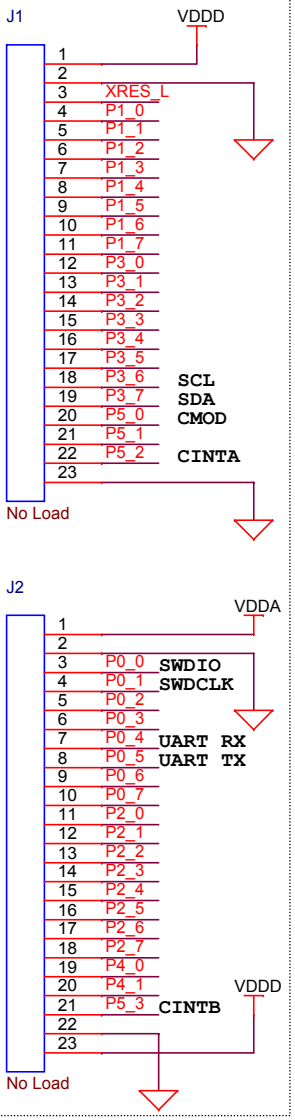

Input Switch

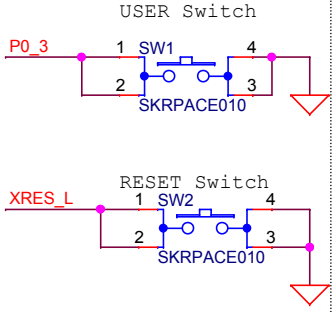

Reset and Crystal

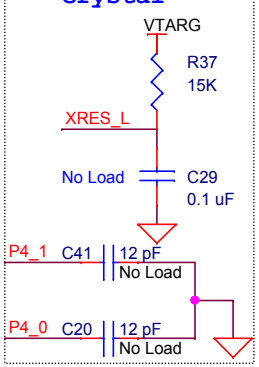

Current Measurement

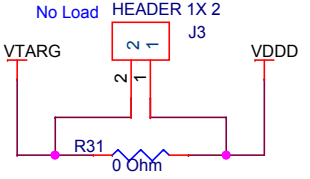

User LED

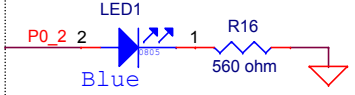

Target Program Headers

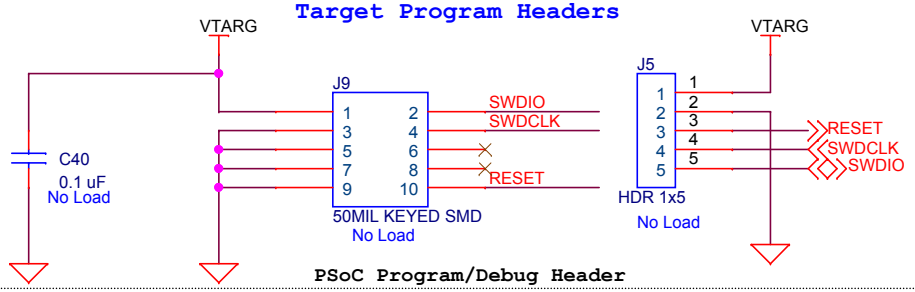

Decoupling Capacitors

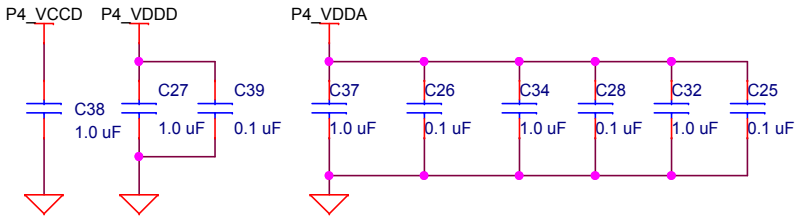

I2C Pullups

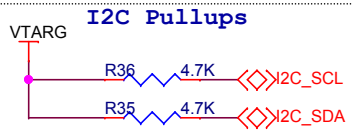

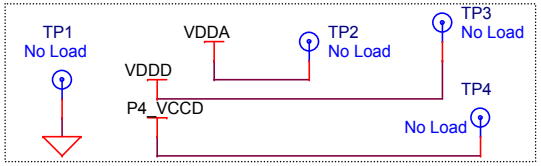

CapSense Capacitor Components

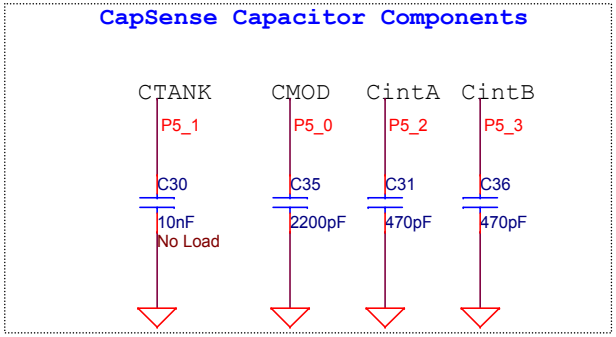

Voltage Reference

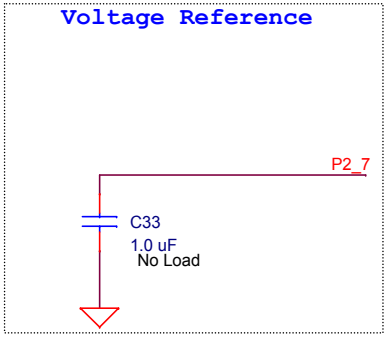

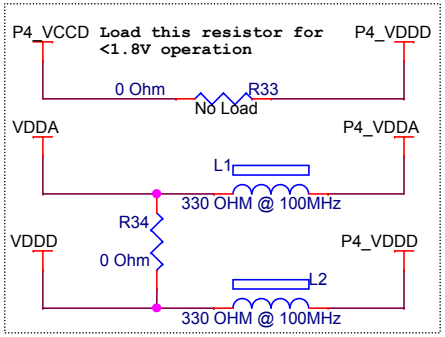

CYPRESS SEMICONDUCTOR
198 CHAMPION COURT
SAN JOSE, CA 95134
(408) 943-2600

CYPRESS SEMICONDUCTOR © 2017

SCH Title : CY8CKIT-147 PSoC 4100PS Prototyping Kit

Page Title : PSoC 4100PS

Size	Document Number	Drawn By	Approved By	Rev
A4	630-60382-01	NMIT	RKAD	03

Date: Friday, March 17, 2017 Sheet 4 of 5

REVISION HISTORY

REV	DESCRIPTION OF CHANGE	DATE
01	Initial Release	11/30/2016
02	Internal Release	1/10/2017
03	Production Release	1/31/2017

CYPRESS SEMICONDUCTOR
198 CHAMPION COURT
SAN JOSE, CA 95134
(408) 943-2600

CYPRESS SEMICONDUCTOR © 2017

SCH Title : CY8CKIT-147 PSoC 4100PS Prototyping Kit

Page Title : Revision History

Size	Document Number	Drawn By	Approved By	Rev
A4	630-60382-01	NMIT	RKAD	03

Date: Tuesday, March 21, 2017 Sheet 5 of 5