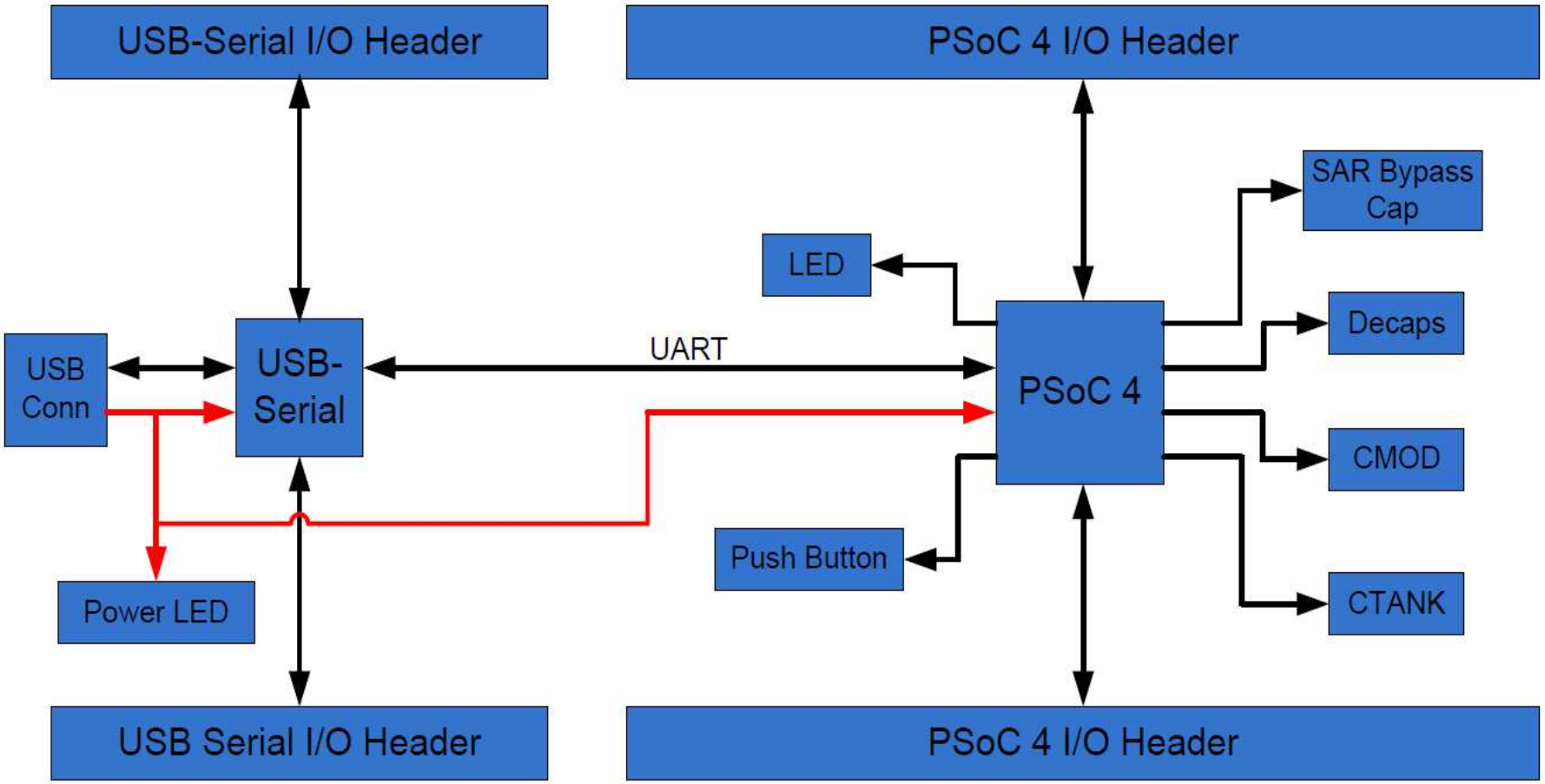

CYPRESS SEMICONDUCTOR © 2013		
Title: CY8CKIT-049-41xx PSoC 4 Prototyping Kit		
Size	Document Number: 630-60173-01	Rev: 03
Date: Wednesday, January 22, 2014	Sheet 1 of 1	

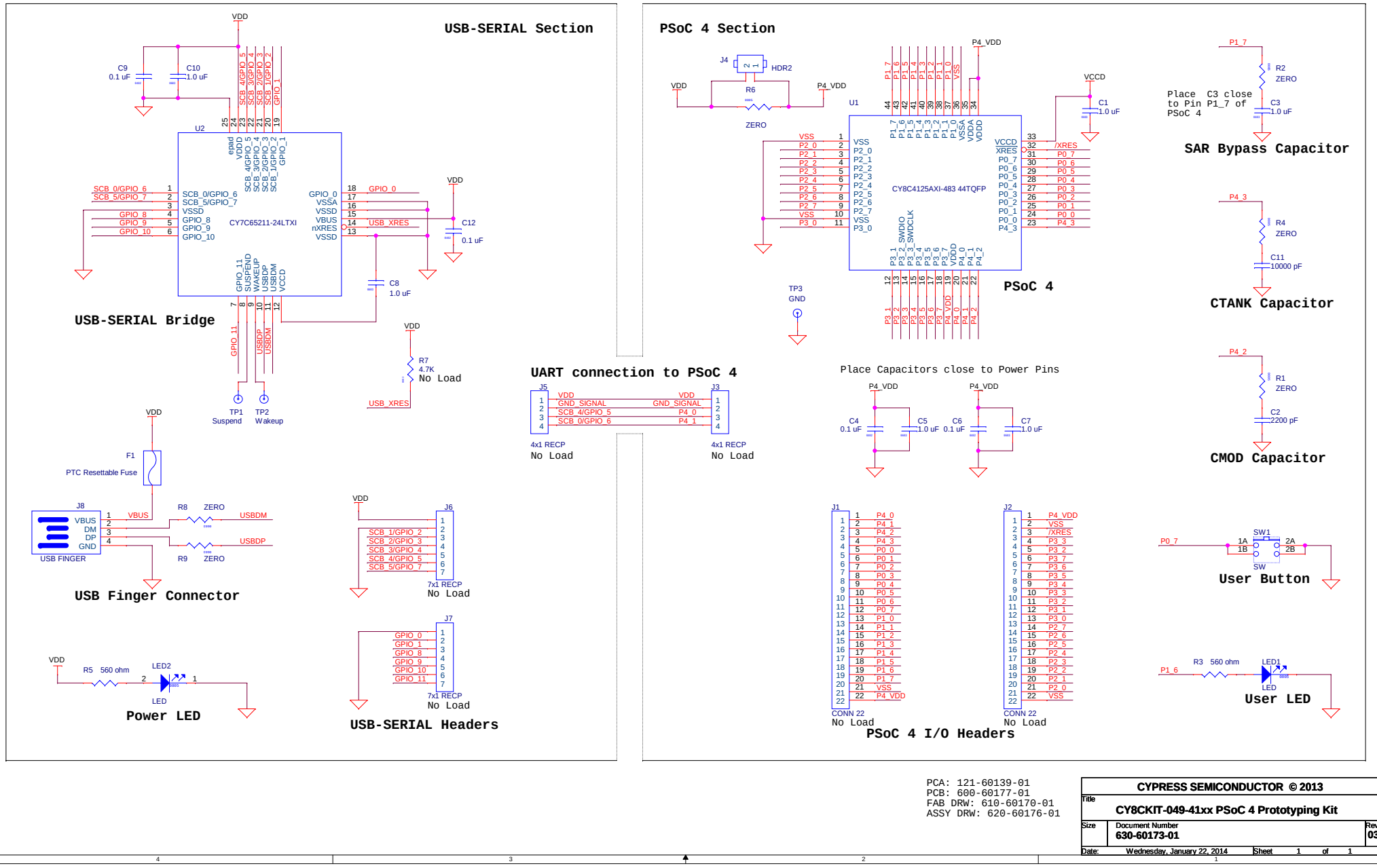

PCA: 121-60139-01
PCB: 600-60177-01
FAB DRW: 610-60170-01
ASSY DRW: 620-60176-01

CYPRESS SEMICONDUCTOR © 2013		
Title: CY8CKIT-049-41xx PSoC 4 Prototyping Kit		
Size	Document Number: 630-60173-01	Rev: 03
Date: Wednesday, January 22, 2014	Sheet 1 of 1	