CY8CKIT-045S PSoC 4500S Pioneer Kit

CONTENTS

PAGE	DESCRIPTION
01	Title, Table of Contents & Drawing Numbers
02	Block Diagram
03	Power Supply
04	KitProg3 Interface
05	PSoC 4500S Interface
06	Peripherals
07	Arduino Headers, Expansion Headers and Accessories
08	Revision History

Drawing Numbers

PCBA	121-60582-01
PCB	600-60582-01
FAB DRW	610-60582-01
ASSY DRW	620-60582-01
SCH DRW	630-60582-01

CYPRESS SEMICONDUCTOR
198 CHAMPION COURT
SAN JOSE, CA 95134
(408) 943-2600

CYPRESS SEMICONDUCTOR © 2020

SCH Title : CY8CKIT-045S PSoC 4500S Pioneer Kit

Page Title : Title Page

Size	Document Number	Drawn By	Approved By	Rev
A4	630-60582-01	RISR	RKAD	04

Date: Monday, December 21, 2020 Sheet 1 of 8

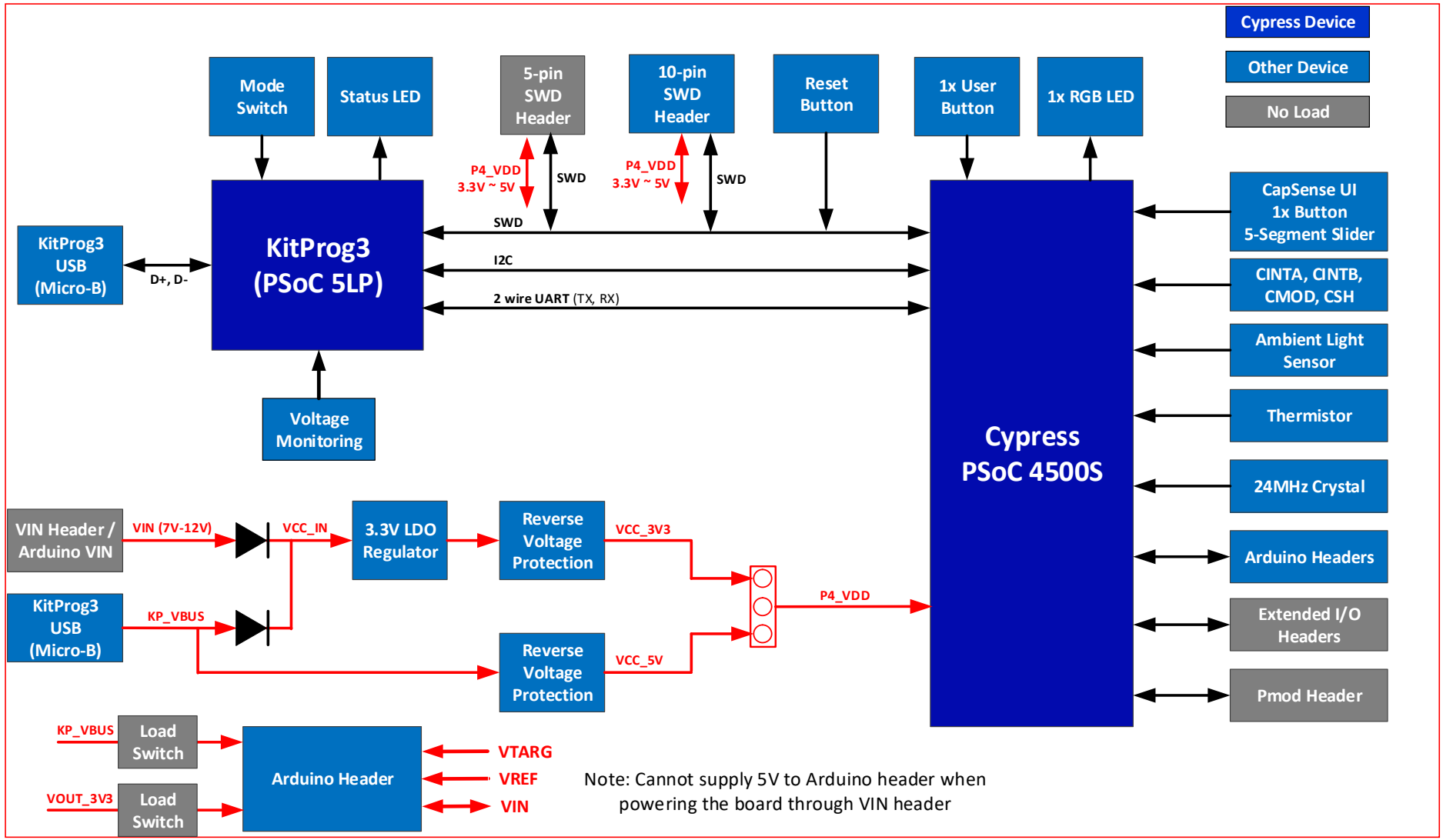

CYPRESS SEMICONDUCTOR
198 CHAMPION COURT
SAN JOSE, CA 95134
(408) 943-2600

CYPRESS SEMICONDUCTOR © 2020

SCH Title : CY8CKIT-045S PSoC 4500S Pioneer Kit

Page Title : Block Diagram

Size	Document Number	Drawn By	Approved By	Rev
A4	630-60582-01	RISR	RKAD	04

Date: Monday, December 21, 2020 Sheet 2 of 8

KitProg3 USB Micro-B connector

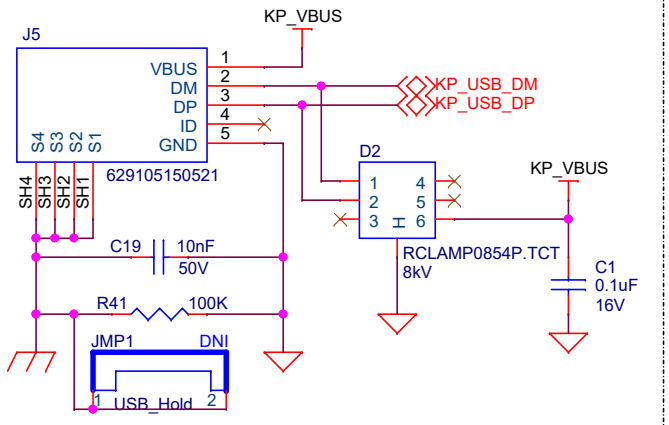

VIN Header

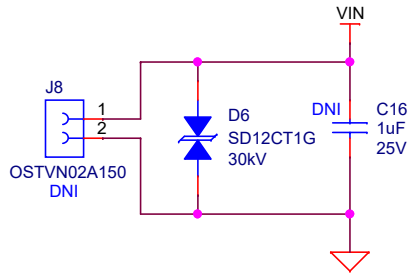

3.3V Regulator

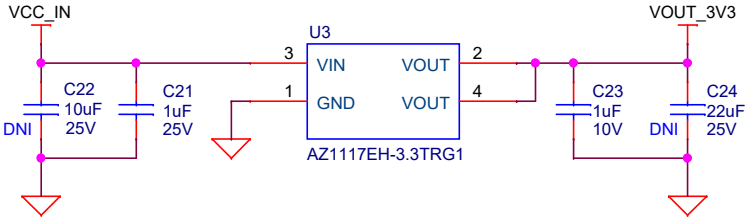

Power Supply 'OR'ing

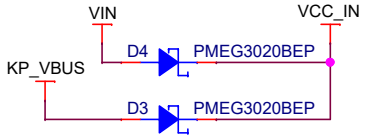

Power LED

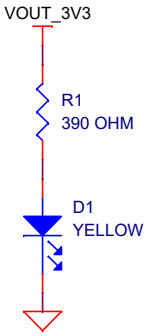

Reverse Voltage Protection

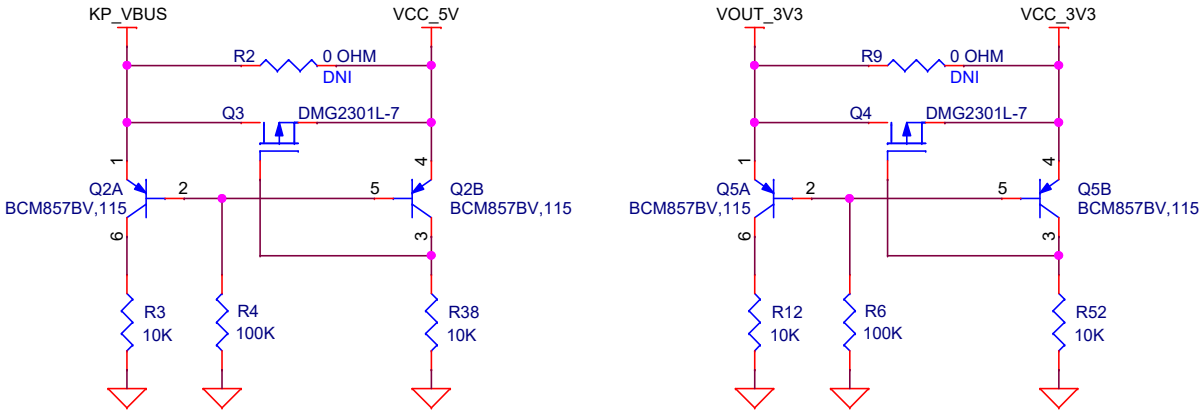

Test Points

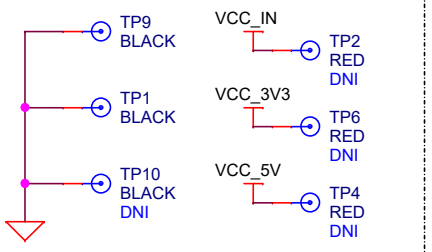

Power Selection/Current Measurement Jumper

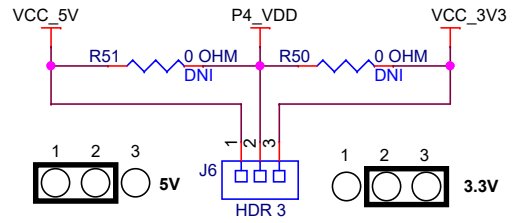

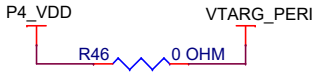

Note: This resistor (R46) is used to avoid leakage current on P4_VDD domain. Remove this resistor to avoid the leakage current on P4_VDD domain. By removing this you will not be able to program the PSoC 4500S using the onboard PSoC 5LP. Also, the RGB User LED, Thermistor and Ambient Light Sensor will not work.

CYPRESS SEMICONDUCTOR
198 CHAMPION COURT
SAN JOSE, CA 95134
(408) 943-2600

CYPRESS SEMICONDUCTOR © 2020

SCH Title : CY8CKIT-045S PSoC 4500S Pioneer Kit				
Page Title : Power Supply				
Size	Document Number	Drawn By	Approved By	Rev
A4	630-60582-01	RISR	RKAD	04
Date: Monday, December 21, 2020		Sheet 3 of 8		

PSoC 5LP based KitProg3

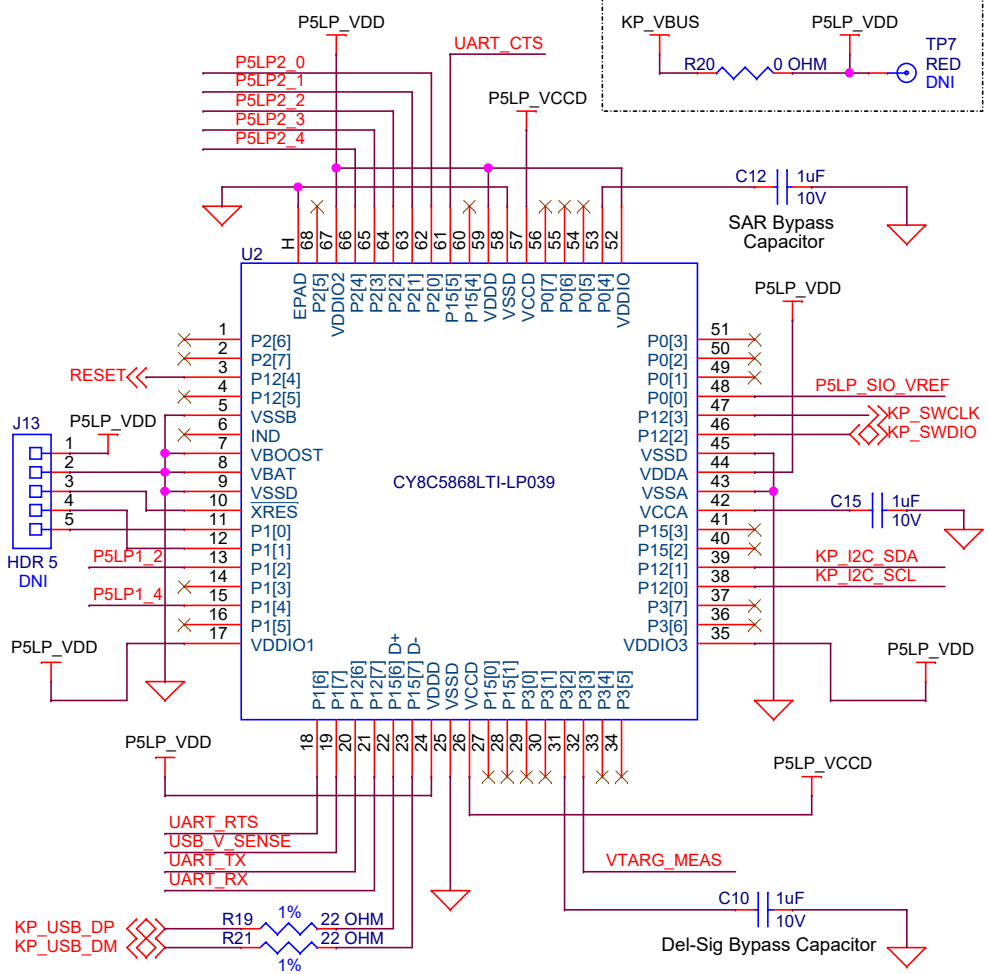

PSoC 5LP Power

Decoupling Capacitors

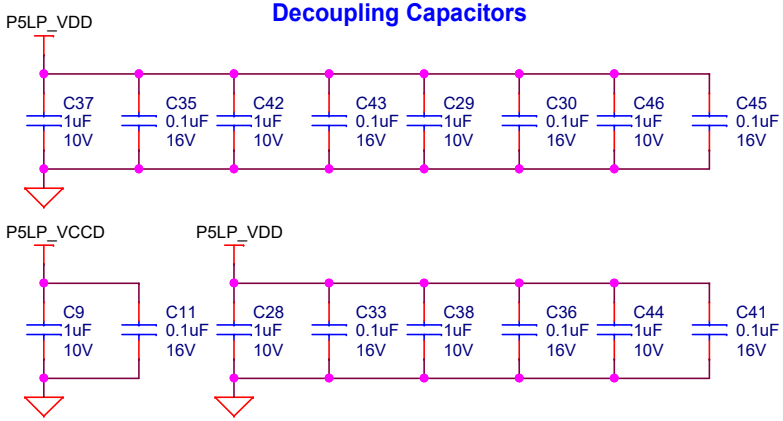

Voltage Monitoring

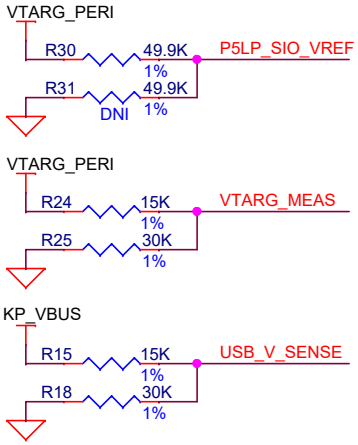

KitProg3 UART Interface

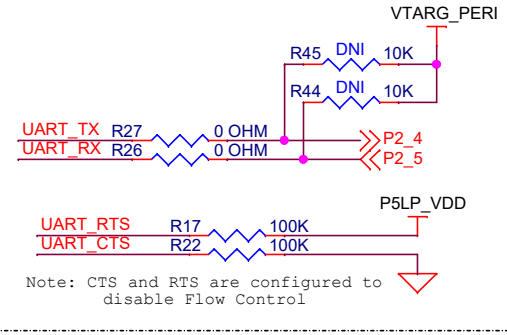

KitProg3 Status LED

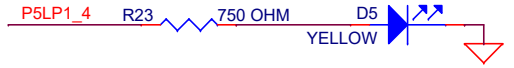

Mode Switch

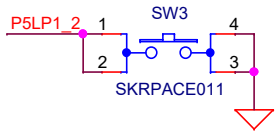

KitProg3 I2C Interface

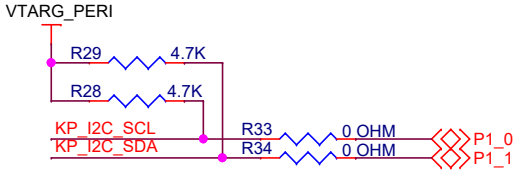

KitProg3 H/W Revision

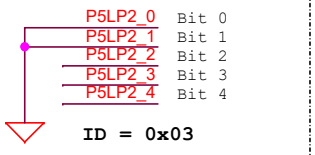

Note: GND is read as binary "1" and floating as "0".

CYPRESS SEMICONDUCTOR
198 CHAMPION COURT
SAN JOSE, CA 95134
(408) 943-2600

CYPRESS SEMICONDUCTOR © 2020

SCH Title :	CY8CKIT-045S PSoC 4500S Pioneer Kit
Page Title :	KitProg3 Interface

Size	Document Number	Drawn By	Approved By	Rev
A4	630-60582-01	RISR	RKAD	04

Date: Monday, December 21, 2020 Sheet 4 of 8

PSoC 4500S

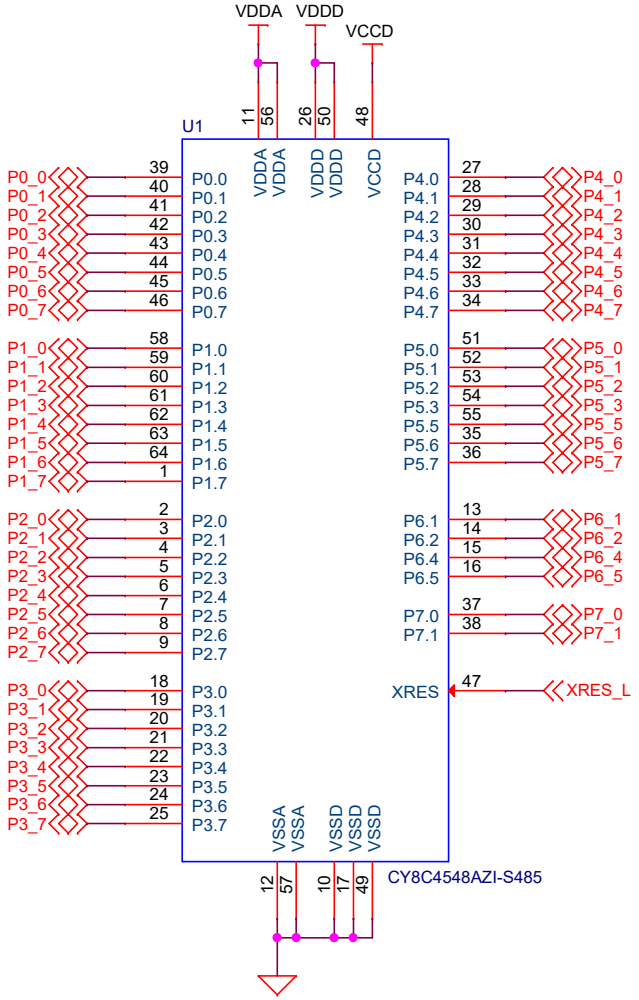

CapSense & Additional Multiplexed Pins

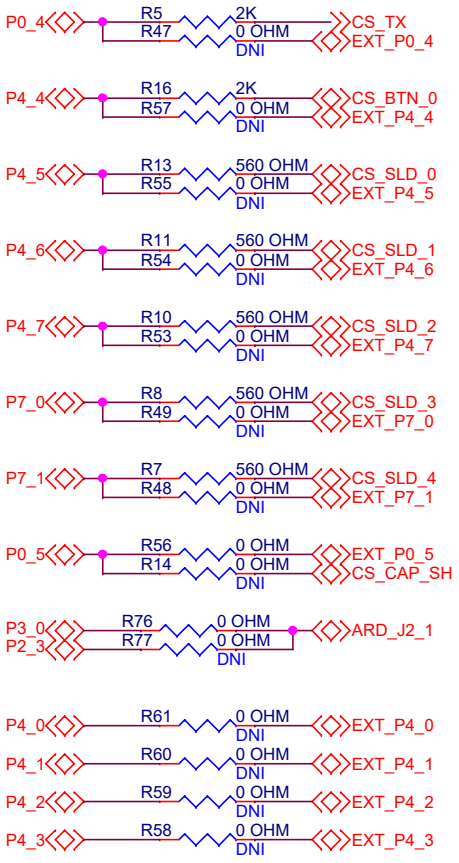

ADC VREF

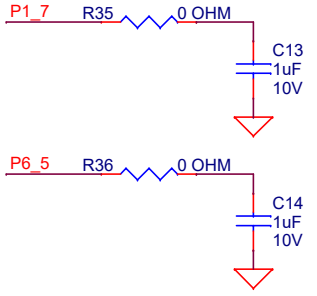

CINT, CMOD & CSH

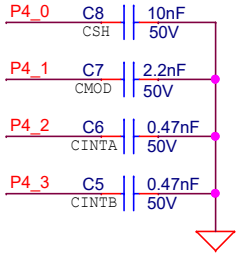

PSoC 4500S Power & Decoupling Capacitors

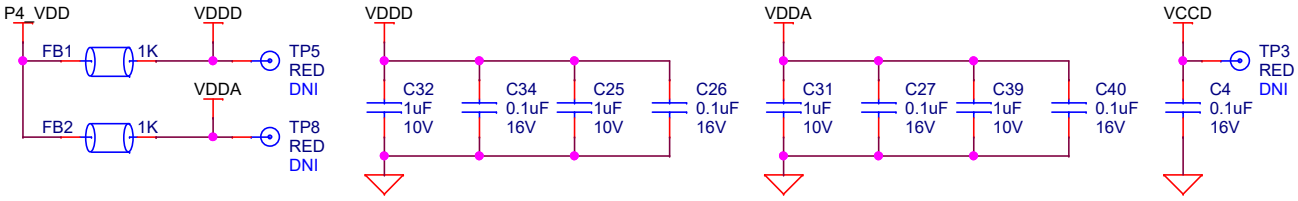

CYPRESS SEMICONDUCTOR
198 CHAMPION COURT
SAN JOSE, CA 95134
(408) 943-2600

CYPRESS SEMICONDUCTOR © 2020

SCH Title :	CY8CKIT-045S PSoC 4500S Pioneer Kit
Page Title :	PSoC 4500S Interface

Size	Document Number	Drawn By	Approved By	Rev
A4	630-60582-01	RISR	RKAD	04

Date: Monday, December 21, 2020 Sheet 5 of 8

CapSense Button

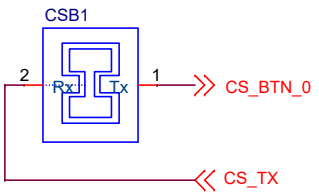

CapSense Slider

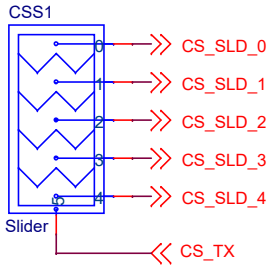

CapSense Shield

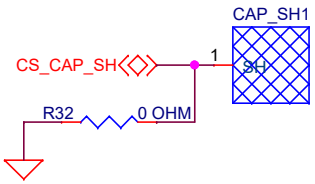

RGB LED

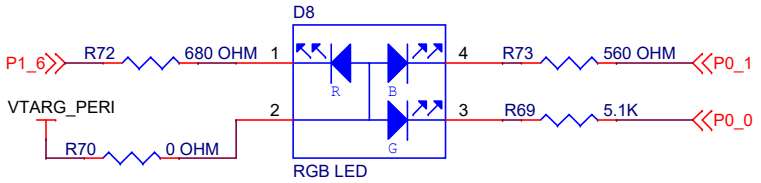

Thermistor

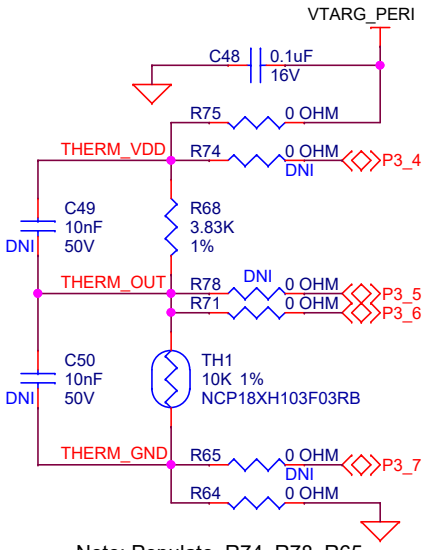

Note: Populate R74, R78, R65 to use the thermistor in differential configuration.

Ambient Light Sensor

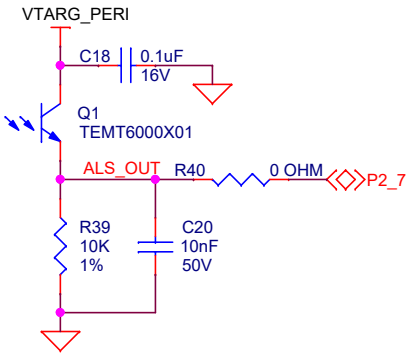

ECO

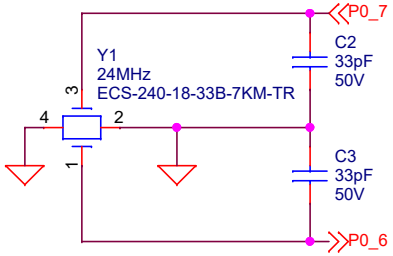

10-pin and 5-pin SWD Headers

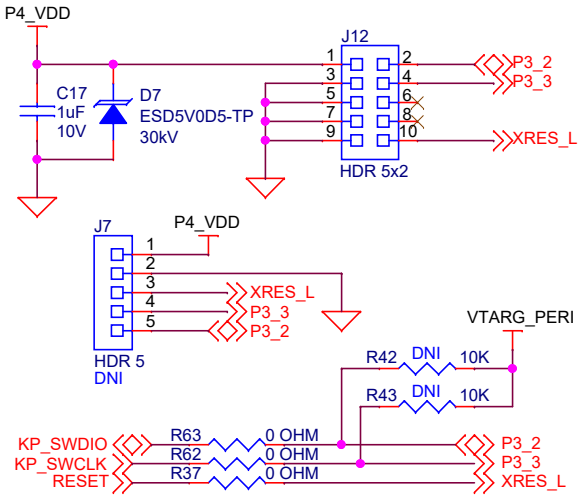

User Button

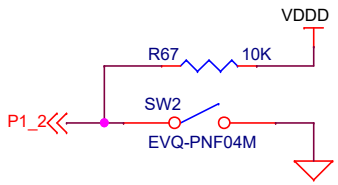

Reset Button

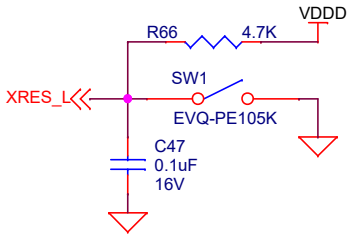

CYPRESS SEMICONDUCTOR
198 CHAMPION COURT
SAN JOSE, CA 95134
(408) 943-2600

CYPRESS SEMICONDUCTOR © 2020

SCH Title : CY8CKIT-045S PSoC 4500S Pioneer Kit				
Page Title : Peripherals				
Size A4	Document Number 630-60582-01	Drawn By RISR	Approved By RKAD	Rev 04
Date: Monday, December 21, 2020		Sheet 6 of 8		

Arduino & Extended Headers

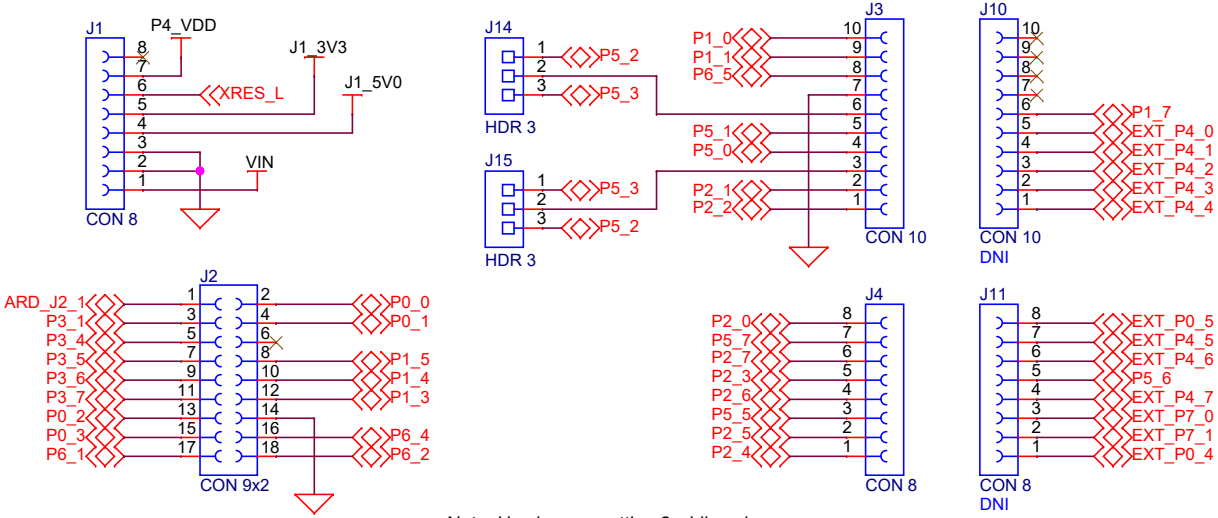

Note: 5V on Arduino header will be present only when KitProg3 USB is connected.

Note: Use jumper setting 2 while using CY8CKIT-037. Jumper setting 1 is by default.

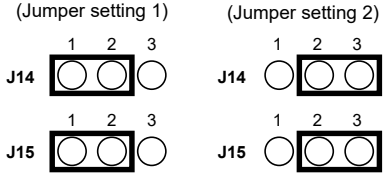

Accessories

Cylindrical Bump-ons

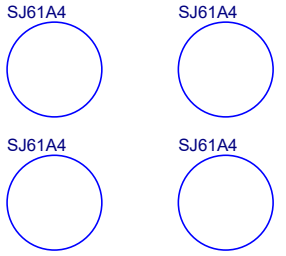

Acrylic Overlay

Overlay

Color: Clear, Transparent
Finish: Matt

Dimensions:
69mm - length
22mm - height
1mm - thickness

Jumper Shunts

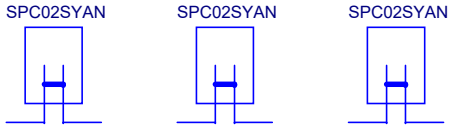

PCBA label

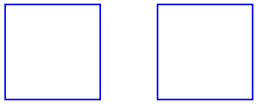

Pmod Header

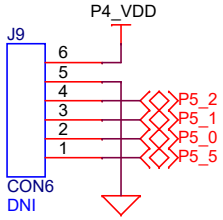

Reverse Voltage Protection for Arduino Header

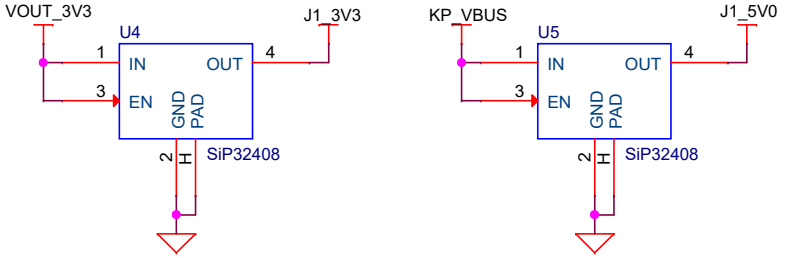

CYPRESS SEMICONDUCTOR
198 CHAMPION COURT
SAN JOSE, CA 95134
(408) 943-2600

CYPRESS SEMICONDUCTOR © 2020

SCH Title : CY8CKIT-045S PSoC 4500S Pioneer Kit				
Page Title : Arduino Headers, Expansion Headers & Accessories				
Size A4	Document Number 630-60582-01	Drawn By RISR	Approved By RKAD	Rev 04
Date: Monday, December 21, 2020		Sheet 7 of 8		

REVISION HISTORY

REV	DESCRIPTION OF CHANGE	Orig. of Change	DATE
01	Initial Release	AARA	08/04/2020
02	1) PSoC 5LP programming testpoints removed, 5-pin header added 2) 5-Pin programming header for PSoC 4 added 3) Testpoint for VCCD added 4) Thermistor divider resistor value changed to 3.83K for 10C - 50C temperature range with internal VREF at 5V 5) 10-pin programming header TVS diode changed to 5V part, made populated 6) All available components updated to database 7) Back annotated schematic 8) Block diagram updated; J5 part changed; JMP1 made as DNI; R41 updated; R1 changed to 390ohms; TP1, D7 populated; J13 added; R38, R39 removed; C48, C49, C50 added; R42, R43 added; J14, J15 added; R35, R36 added; R73, R69 values updated; Overlay description updated; USB cable removed; ACC14 added, C4 changed to 0.1uF. 9) HW Revision changed to 0x03	RISR	22/10/2020
03	1) C5, C6, D6 part MPNs changed with alternatives. 2) Block Diagram updated; Overlay dimension updated	RISR	19/11/2020
04	QR Code Label added	RISR	21/12/2020

CYPRESS SEMICONDUCTOR
198 CHAMPION COURT
SAN JOSE, CA 95134
(408) 943-2600

CYPRESS SEMICONDUCTOR © 2020

SCH Title : CY8CKIT-045S PSoC 4500S Pioneer Kit

Page Title : Revision History

Size	Document Number	Drawn By	Approved By	Rev
A4	630-60582-01	RISR	RKAD	04

Date: Monday, December 21, 2020 Sheet 8 of 8