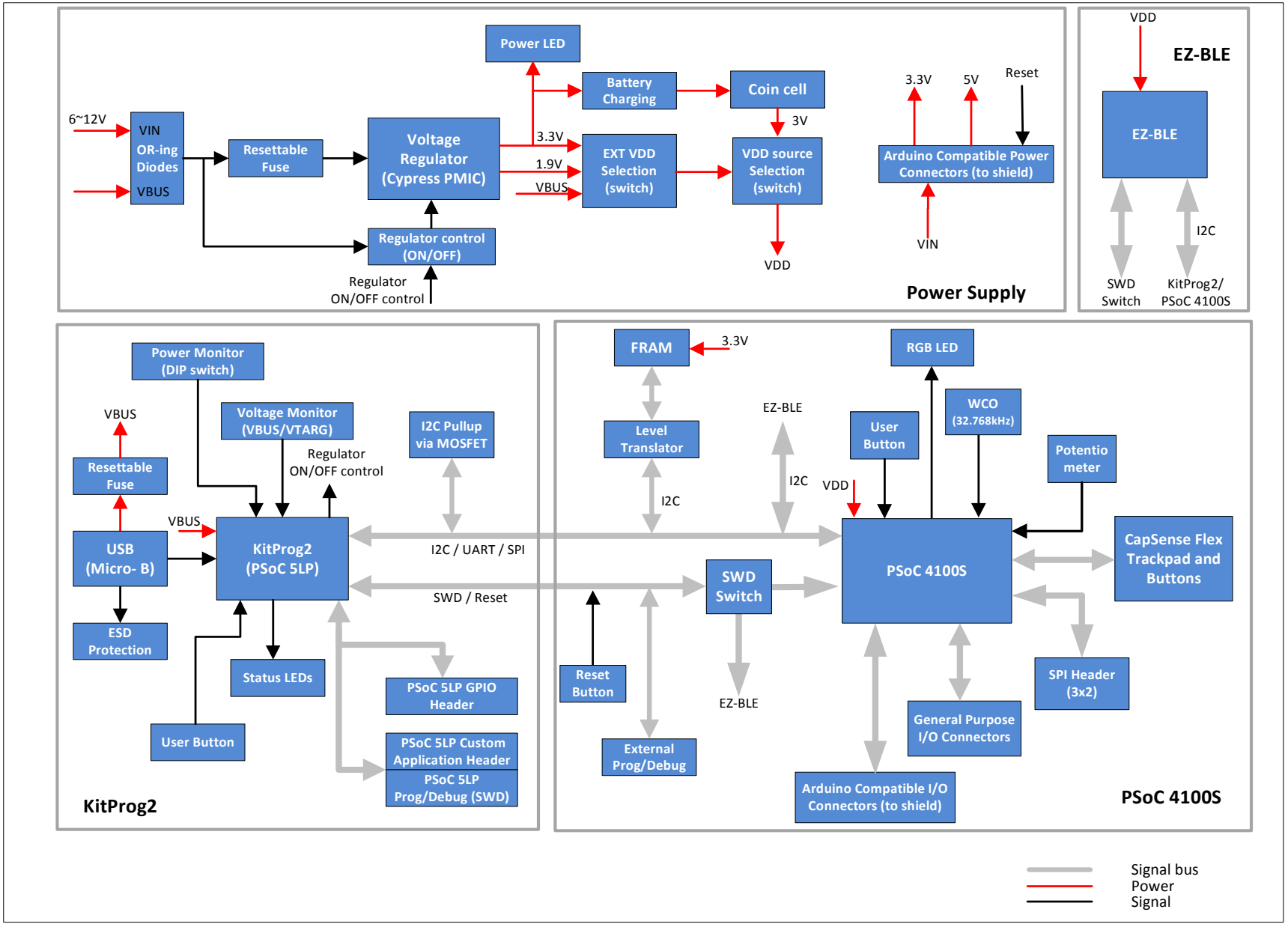

PCBA: 121-60323-01
PCB: 600-60345-01
FAB DRW: 610-60309-01
ASSY DRW: 620-60317-01

CYPRESS SEMICONDUCTOR © 2016		
Title: CY8CKIT-041-41XX PSoC 4100S Pioneer Kit		
Size: A	Document Number: 630-60319-01	Rev: 02
Date: Tuesday, July 19, 2016	Sheet 1 of 6	

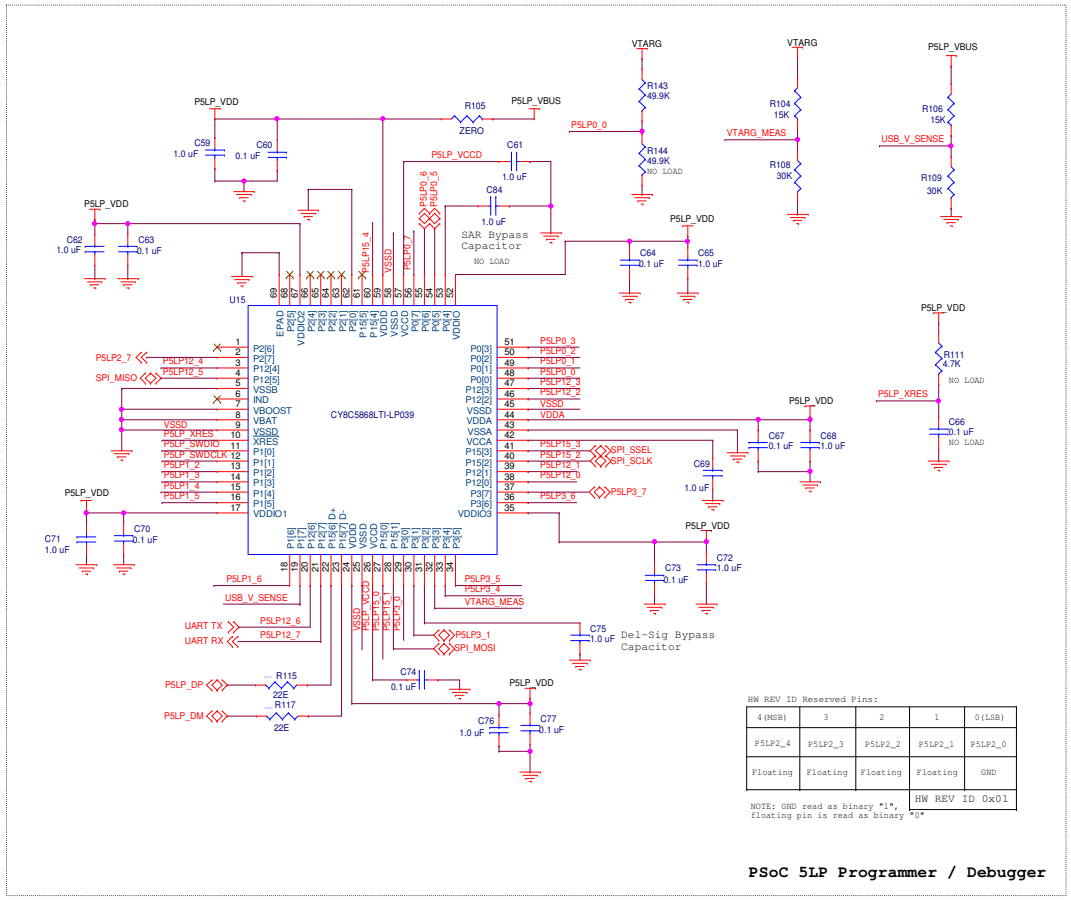

HW REV ID Reserved Pins:

4 (MSB)	3	2	1	0 (LSB)
P5LP2_4	P5LP2_3	P5LP2_2	P5LP2_1	P5LP2_0
Floating	Floating	Floating	Floating	GND
				HW REV ID 0x01

NOTE: GND read as binary "1", floating pin is read as binary "0"

PSoC 5LP Programmer / Debugger

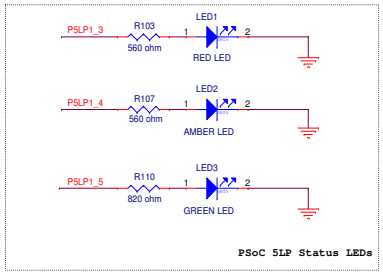

PSoC 5LP Status LEDs

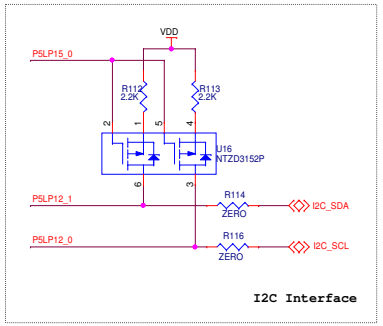

I2C Interface

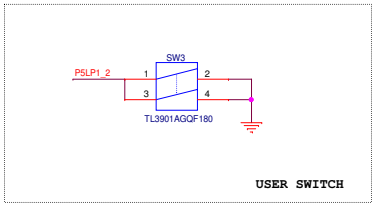

USER SWITCH

USB-Serial Bridge Connections

P5LP12_7 ---------- UART RX
P5LP12_6 ---------- UART TX

P5LP12_0 ---------- I2C SCLK
P5LP12_1 ---------- I2C SDAT
P5LP15_0 ---------- I2C_PULLUP_EN

P5LP12_5 ---------- SPI_MISO
P5LP15_1 ---------- SPI_MOSI
P5LP15_2 ---------- SPI_SCLK
P5LP15_3 ---------- SPI_SS

PSoC Programming Connections

P5LP15_7 ---------- USB_DM
P5LP15_6 ---------- USB_DP
P5LP1_7 ---------- USB_V_SENSE

P5LP12_2 ---------- SWD_IO
P5LP12_3 ---------- SWD_CLK
P5LP12_4 ---------- SWD_XRES

P5LP1_0 ---------- P5LP_SWDIO
P5LP1_1 ---------- P5LP_SWDCLK
XRES ---------- P5LP_XRES

USER Interface Connections

P5LP1_2 ---------- User Switch
P5LP1_3 ---------- Status LED RED
P5LP1_4 ---------- Status LED AMBER
P5LP1_5 ---------- Status LED GREEN

Special Functions Connections

P5LP1_6 ---------- INT_PIN
P5LP15_4 ---------- SUSPEND

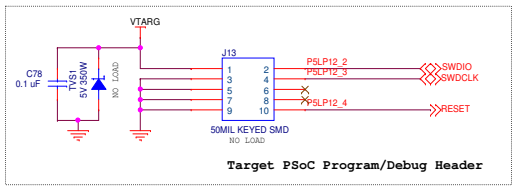

Target PSoC Program/Debug Header

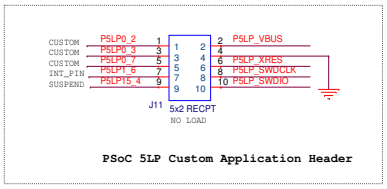

PSoC 5LP Custom Application Header

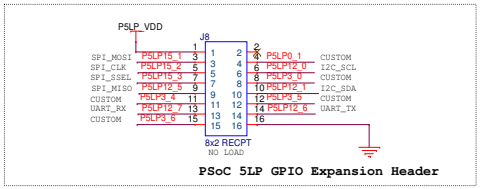

PSoC 5LP GPIO Expansion Header

PCBA: 121-60323-01
PCB: 600-60345-01
FAB DRW: 610-60309-01
ASSY DRW: 620-60317-01

CYPRESS SEMICONDUCTOR © 2016

Title: **CY8CKIT-041-41XX PSoC 4100S Pioneer Kit**

Size	Document Number	Rev
Custom	630-60319-01	02

Date: Monday, June 27, 2016 Sheet 2 of 6

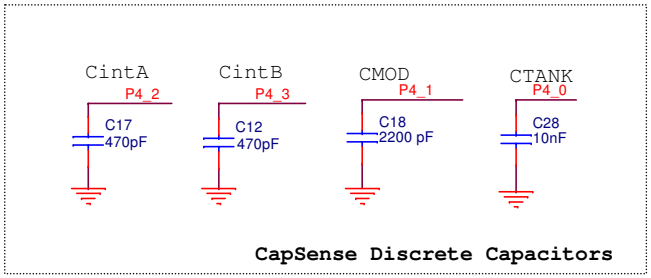

CapSense Discrete Capacitors

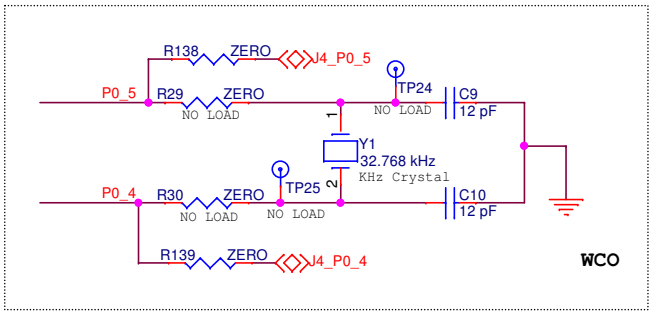

WCO

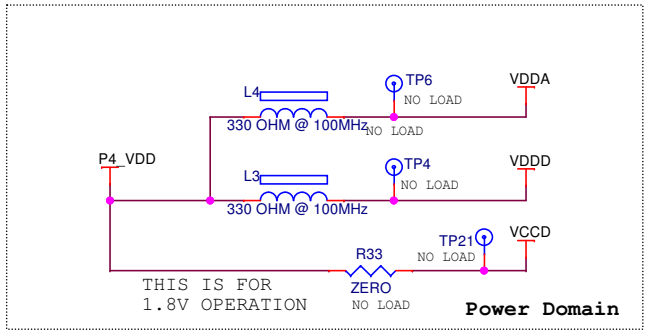

Power Domain

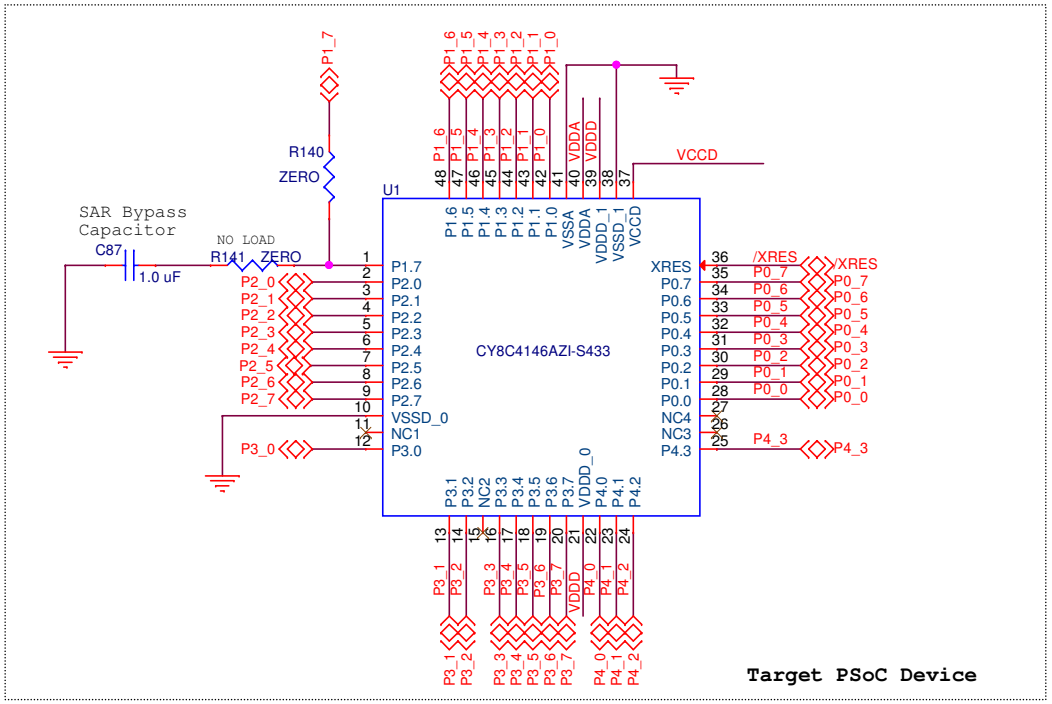

Target PSoC Device

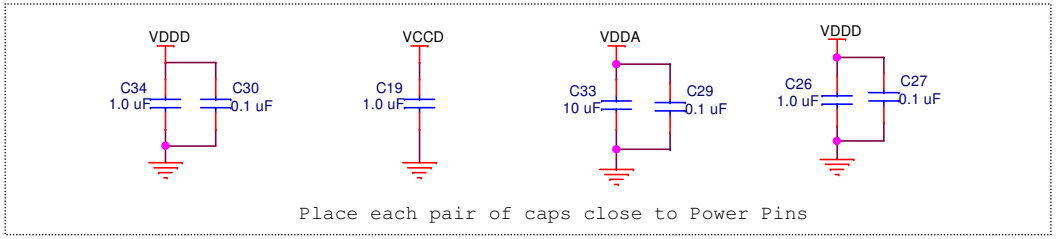

Place each pair of caps close to Power Pins

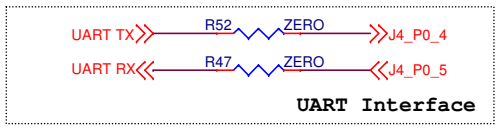

UART Interface

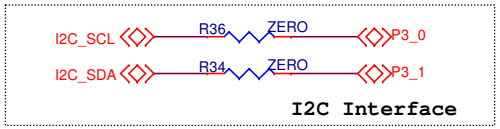

I2C Interface

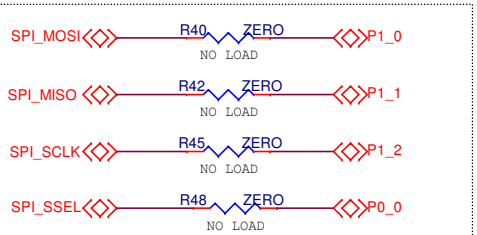

SPI Interface

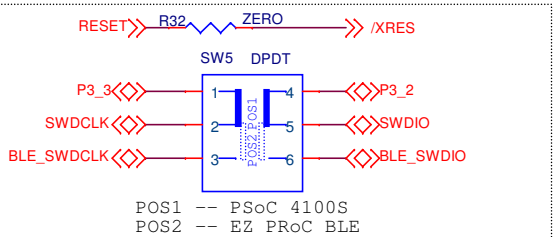

SWD Programming Interface

PSoC 5LP and PSoC 4100S Connections

PCBA: 121-60323-01
PCB: 600-60345-01
FAB DRW: 610-60309-01
ASSY DRW: 620-60317-01

CYPRESS SEMICONDUCTOR © 2016

Title: CY8CKIT-041-41XX PSoC 4100S Pioneer Kit

Size	Document Number	Rev
Custom	630-60319-01	02

Date: Tuesday, July 19, 2016 Sheet 3 of 6

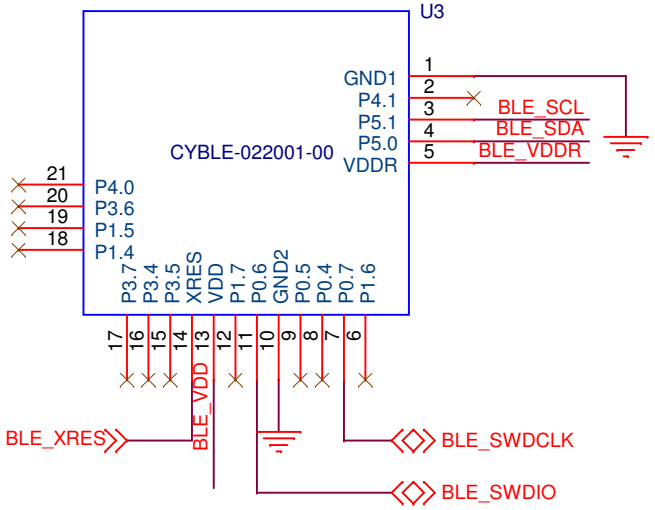

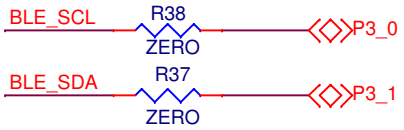

PRoC BLE and PSoC 4100S Connections



BLE Reset

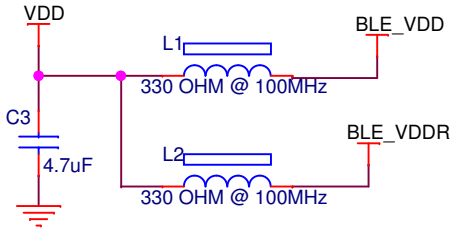

EZ-BLE PRoC Module

PCBA: 121-60323-01
PCB: 600-60345-01
FAB DRW: 610-60309-01
ASSY DRW: 620-60317-01

CYPRESS SEMICONDUCTOR © 2016

Title: CY8CKIT-041-41XX PSoC 4100S Pioneer Kit		
Size: A	Document Number: 630-60319-01	Rev: 02
Date: Monday, June 27, 2016	Sheet 4 of 6	

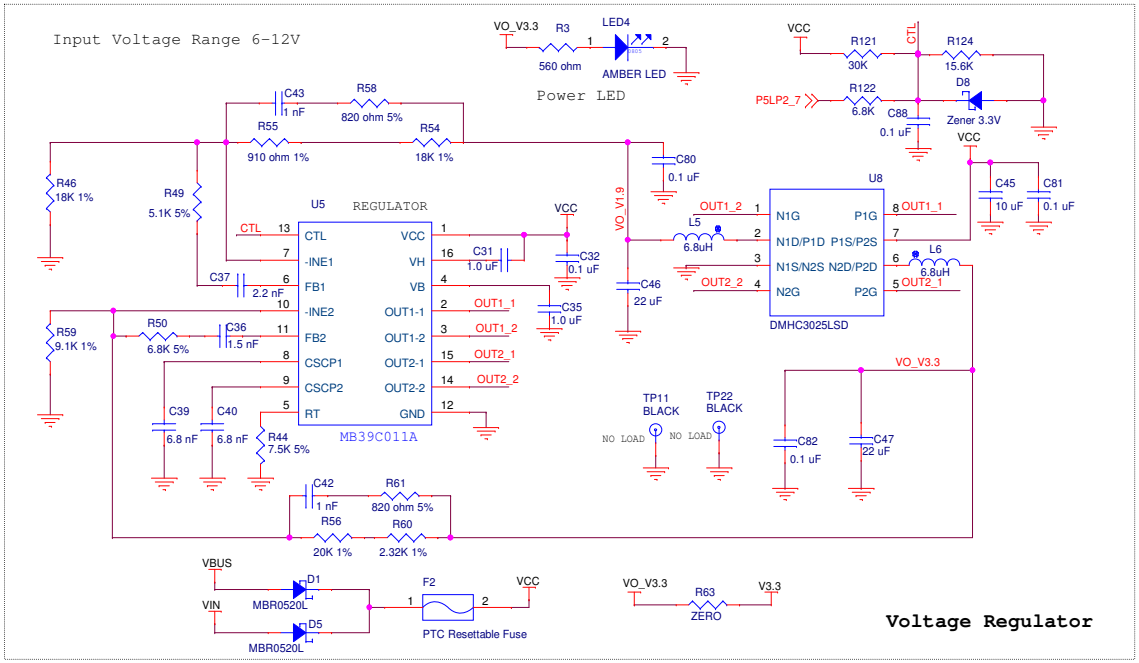

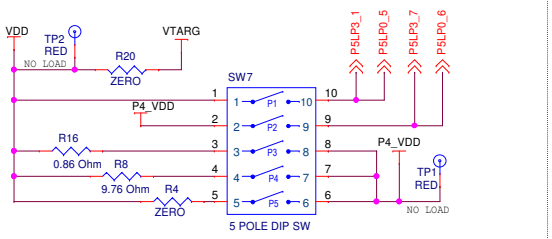

SWITCH(S7) SETTINGS

Load	P1	P2	P3	P4	P5
Default (short)	OFF	OFF	OFF	OFF	ON
1 ohm	ON	ON	ON	OFF	OFF
10 ohm	ON	ON	OFF	ON	OFF

Note: To avoid leakage during battery operation remove R20

By default P5 is ON.

To enable PSoC 5LP Power Monitoring, P1 and P2 should be ON, P5 should be OFF and the corresponding resistor (1 ohm/ 10 ohm) should be connected (P3/P4).

To enable external power monitoring, Ammeter should be connected to TP1 and TP2. P1, P2...P5 should be OFF.

Power Monitoring

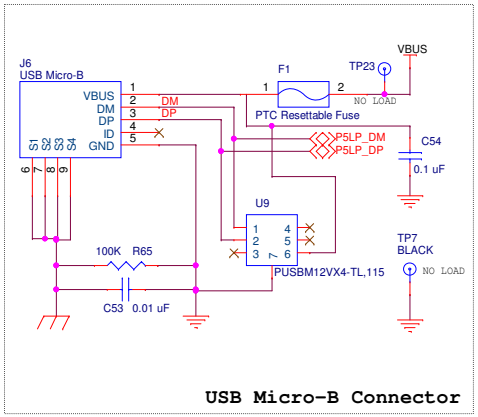

USB Micro-B Connector

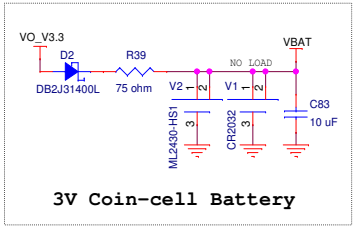

3V Coin-cell Battery

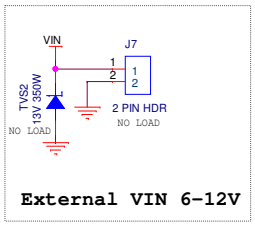

External VIN 6-12V

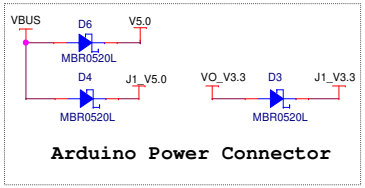

Arduino Power Connector

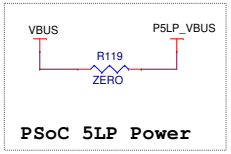

PSoC 5LP Power

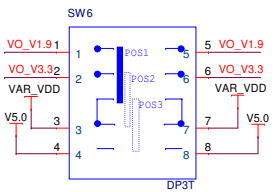

SWITCH(SW6) SETTINGS

SW6 POSITION	Voltage
POS1	1.9V
POS2	3.3V
POS3	5.0V

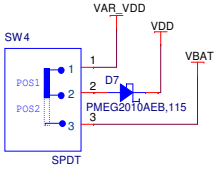

SWITCH(SW4) SETTINGS

SW4 POSITION	Power Supply
POS1	VREG/VBUS
POS2	VBAT

Power Supply Selection

PCBA: 121-60323-01
PCB: 600-60345-01
FAB DRW: 610-60309-01
ASSY DRW: 620-60317-01

CYPRESS SEMICONDUCTOR © 2016

Title: CY8CKIT-041-41XX PSoC 4100S Pioneer Kit

Size	Document Number	Rev
A3	630-60319-01	02

Date: Thursday, June 30, 2016 Sheet 6 of 6

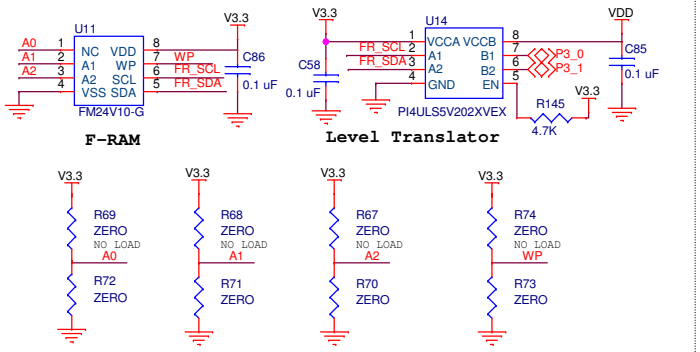

F-RAM **Level Translator**

The F-RAM FM24V10 on the CY8CKIT-041 Pioneer Kit is compatible with all I2C-based F-RAM devices from Cypress (FM24Vxx, FM24CLxx, and CY15BxxxJ parts). The F-RAM parts with more than 64 KB size support only four addresses (four devices of the same type on the same I2C bus); resistors connected to A1 (R68/R71) and A2 (R67/ R70) pins can be used to select any of the four addresses. The F-RAM parts with less than 64 KB and FM24CLxx parts support eight addresses; resistors connected to A0 (R69/R72), A1 (R68/R71) and A2 (R67/ R70) pins can be used to select one of the eight addresses.

Memory Interface

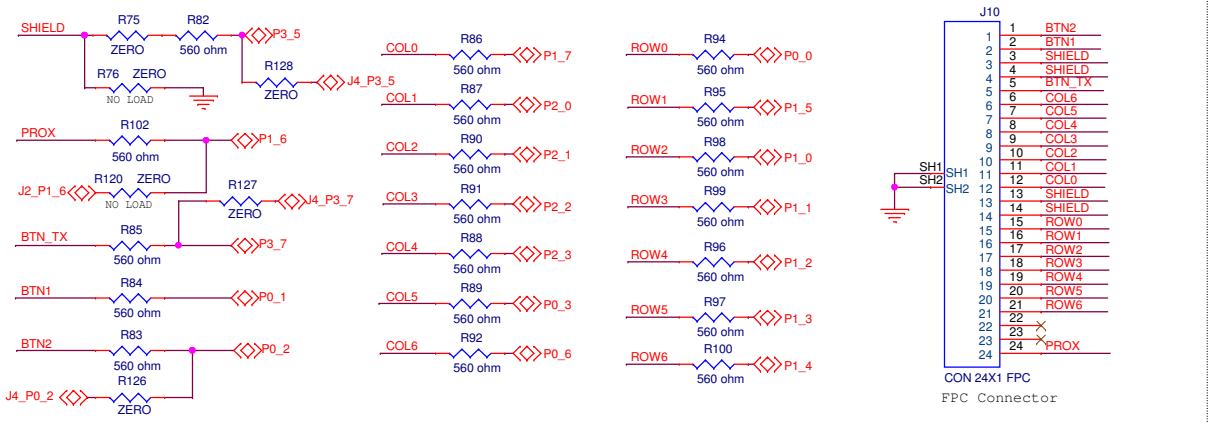

R75 is loaded by default to connect Shield pattern to PSoC 4100S GPIO (P3_5). Remove R75 and load R76 to connect Shield to GND.

CapSense Interface

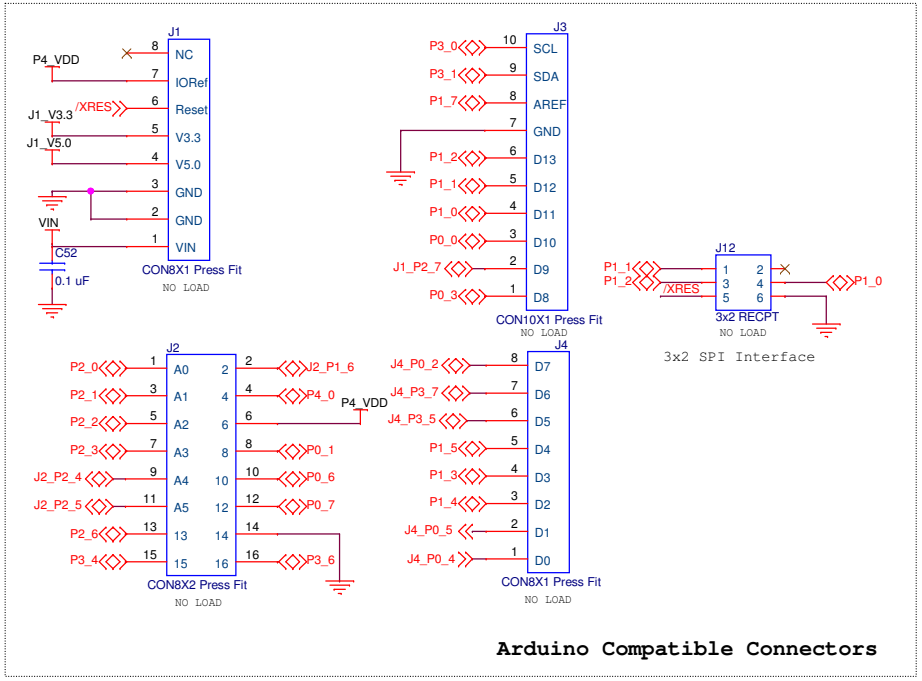

Arduino Compatible Connectors

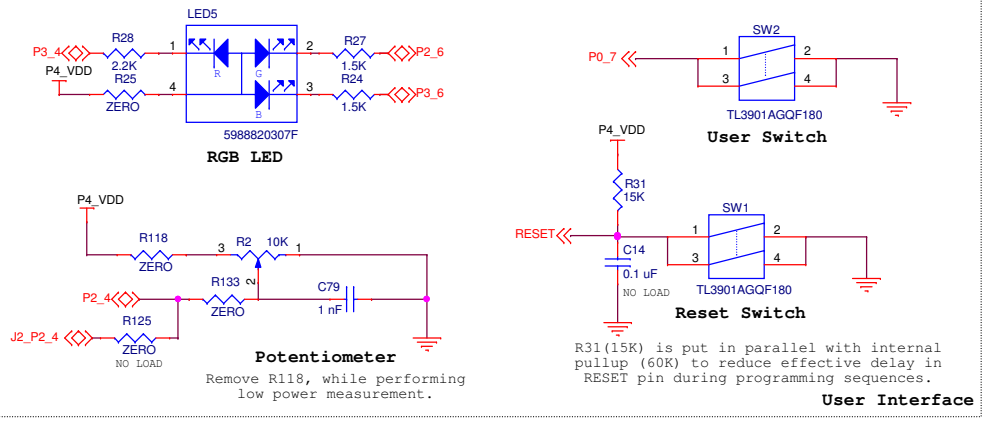

User Interface

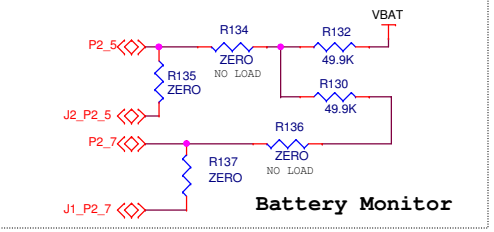

PCBA: 121-60323-01
PCB: 600-60345-01
FAB DRW: 610-60309-01
ASSY DRW: 620-60317-01

CYPRESS SEMICONDUCTOR © 2015

Title: CY8CKIT-041-41XX PSoC 4100S Pioneer Kit		
Size: B	Document Number: 630-60319-01	Rev: 02
Date: Monday, June 27, 2016	Sheet 6 of 6	