CY8CKIT-040T PSoC™ 4000T CAPSENSE™ Evaluation Kit

CONTENTS

PAGE	DESCRIPTION
01	Title, Table of Contents & Drawing Numbers
02	Functional Block Diagram
03	Power Supply Block Diagram
04	USB Interface and Power Supply
05	KitProg3 Interface
06	PSoC™ 4000T Device Interface
07	Capacitive sensor's and onboard Peripherals
08	Accessories
09	Revision History

Drawing Numbers

PCBA	121-60615-01
PCB	600-60615-01
FAB DRW	610-60615-01
ASSY DRW	620-60615-01
SCH DRW	630-60615-01

Legal Disclaimer :
The information given in this document shall in no event be regarded as a guarantee of conditions or characteristics. With respect to any examples or hints given herein, any typical values stated herein and/or any information regarding the application of the device, Infineon Technologies hereby disclaims any and all warranties and liabilities of any kind, including without limitation, warranties of non-infringement of intellectual property rights of any third party.

SCH Title : PSoC™ 4000T CAPSENSE™ Evaluation Kit

Page Title: Title Page

Size	Document Number	Drawn By	Approved By	Rev
A4	630-60615-01	Vamsi	Ronak	03

Date: Friday, June 23, 2023 Sheet 1 of 9

Functional Block Diagram

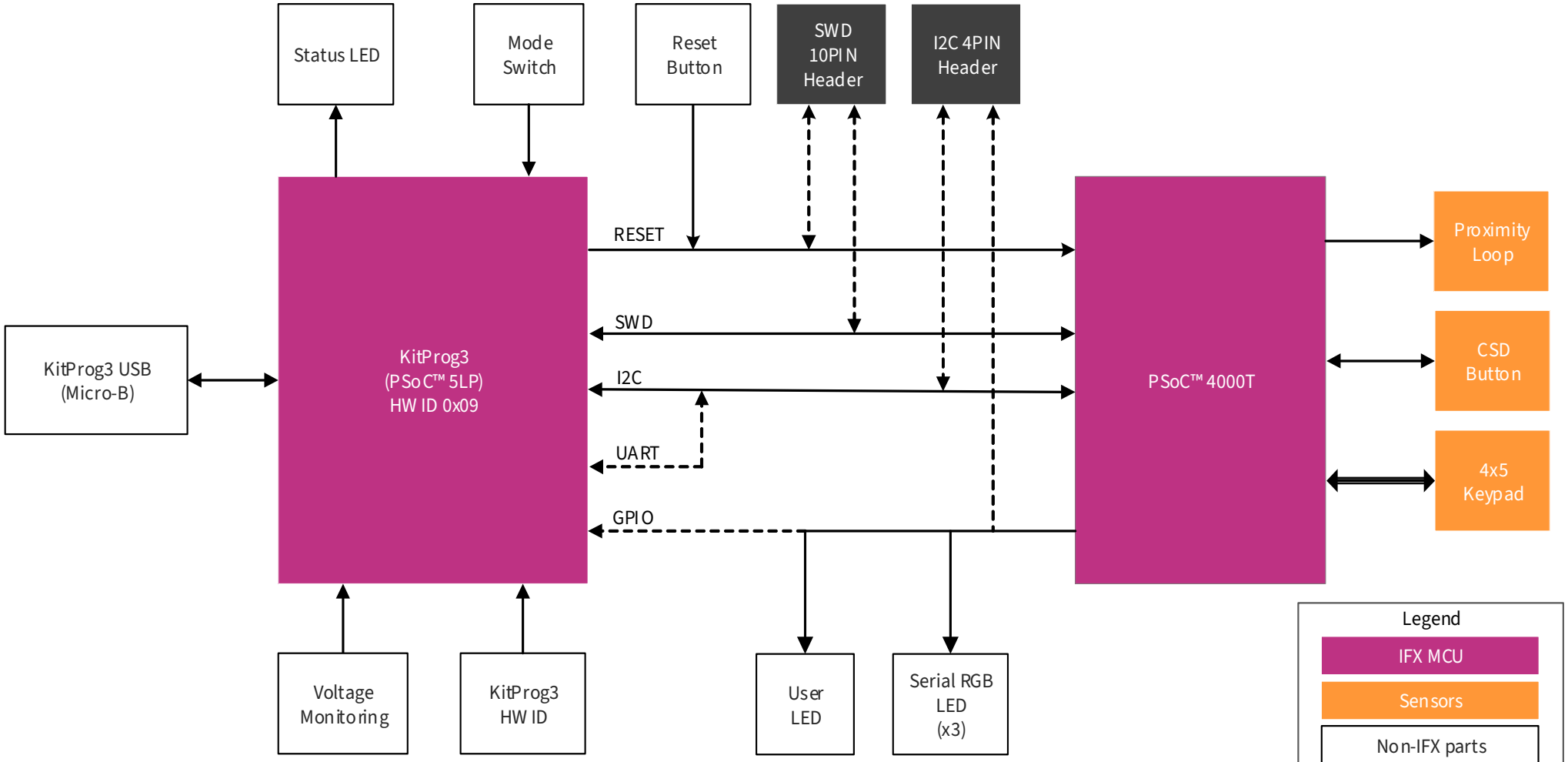

Legal Disclaimer :
The information given in this document shall in no event be regarded as a guarantee of conditions or characteristics. With respect to any examples or hints given herein, any typical values stated herein and/or any information regarding the application of the device, Infineon Technologies hereby disclaims any and all warranties and liabilities of any kind, including without limitation, warranties of non-infringement of intellectual property rights of any third party.

SCH Title :	**PSoC™ 4000T CAPSENSE™ Evaluation Kit**			
Page Title:	**Functional Block Diagram**			
Size	Document Number	Drawn By	Approved By	Rev
A4	**630-60615-01**	**Vamsi**	**Ronak**	**03**
Date:	Friday, June 23, 2023	Sheet	**2** of **9**	

Power Block Diagram

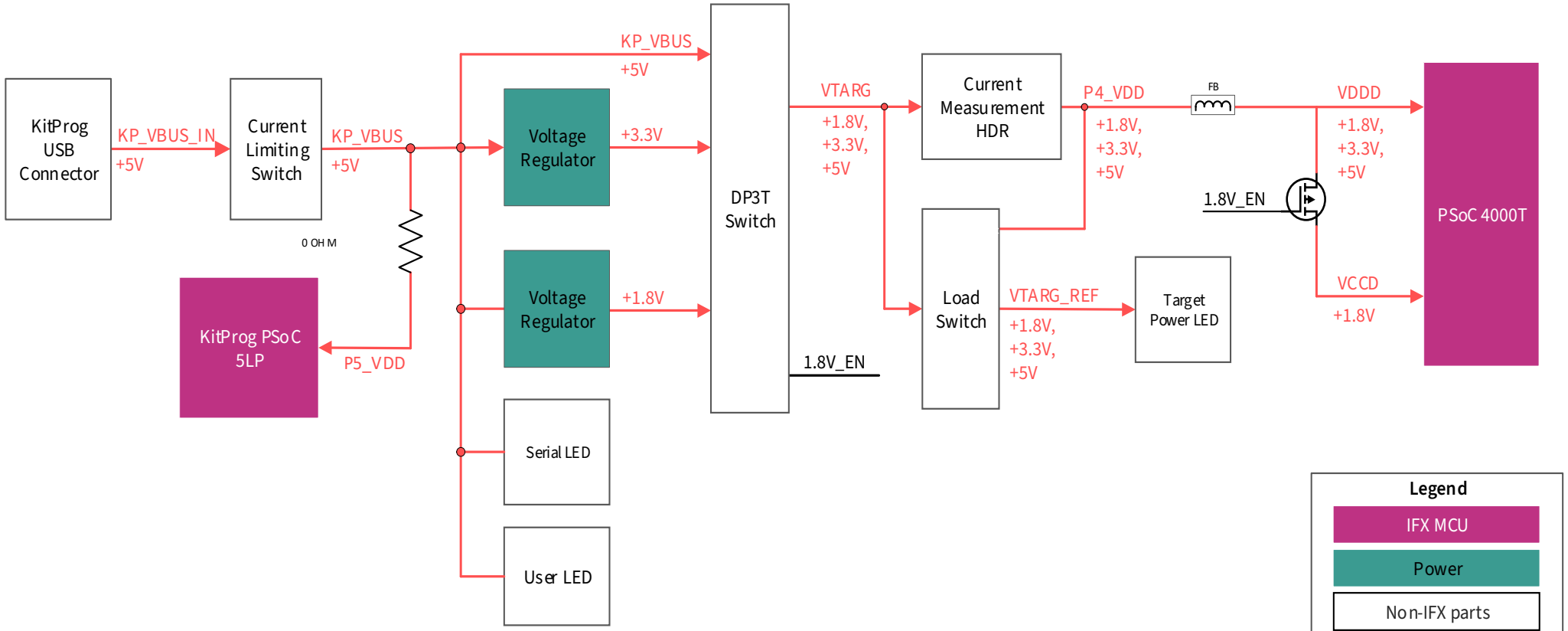

Legal Disclaimer :
The information given in this document shall in no event be regarded as a guarantee of conditions or characteristics. With respect to any examples or hints given herein, any typical values stated herein and/or any information regarding the application of the device, Infineon Technologies hereby disclaims any and all warranties and liabilities of any kind, including without limitation, warranties of non-infringement of intellectual property rights of any third party.

SCH Title : PSoC™ 4000T CAPSENSE™ Evaluation Kit				
Page Title: Power supply Block Diagram				
Size	Document Number	Drawn By	Approved By	Rev
A4	630-60615-01	Vamsi	Ronak	03
Date: Friday, June 23, 2023			Sheet 3 of 9	

USB Power Supply and Interface

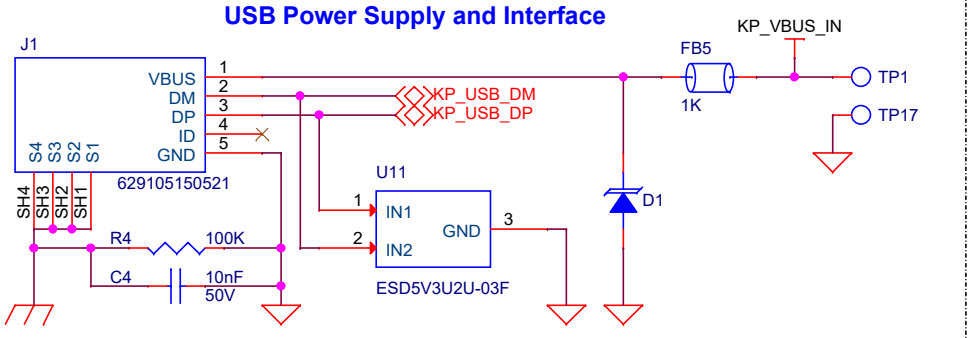

Over Current Protection Load Switch

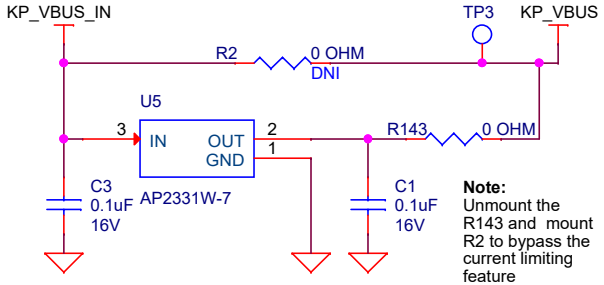

Note:
Unmount the R143 and mount R2 to bypass the current limiting feature

Current Measurement Header

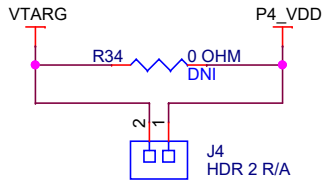

Note:
This header is used for mesuring current consumed by the PSoC™ 4000T MCU

Target Voltage Supply - Linear Voltage Regulator (3.3V, 1.8V @200mA)

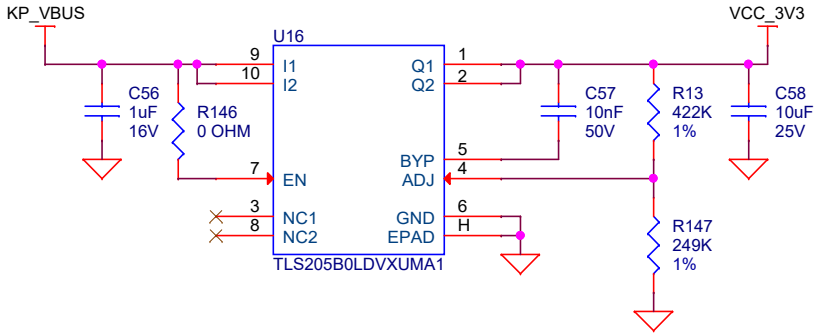

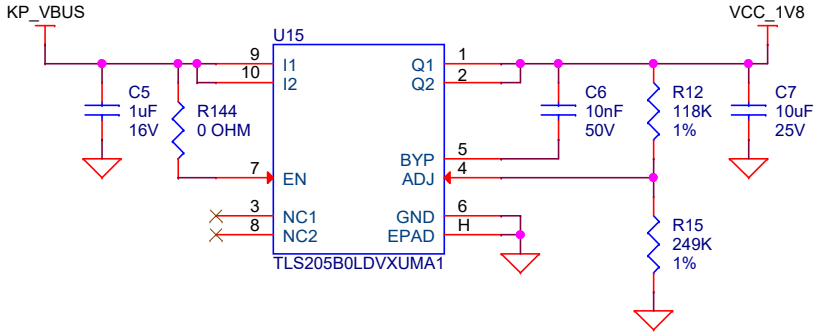

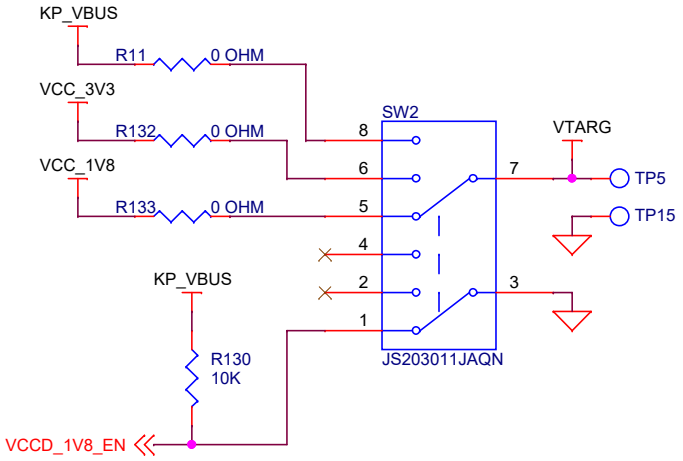

SWITCH POSITION	VTARG
*POS. 1 (SW2 Pin 1,3 and pin 5,7 short)	+1.8V
POS. 2 (SW2 Pin 2,3 and pin 6,7 short)	+3.3V
POS. 3 (SW2 Pin 4,3 and pin 8,7 short)	+5V

Note:
1. Target Voltage based on Slide Switch position (* Default Option)
2. Not to change the slide switch position when powered

Power LED

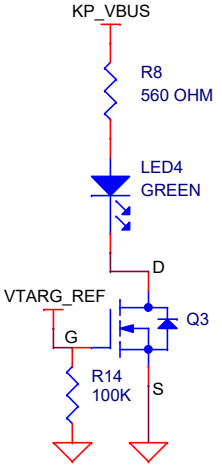

Legal Disclaimer :
The information given in this document shall in no event be regarded as a guarantee of conditions or characteristics. With respect to any examples or hints given herein, any typical values stated herein and/or any information regarding the application of the device, Infineon Technologies hereby disclaims any and all warranties and liabilities of any kind, including without limitation, warranties of non-infringement of intellectual property rights of any third party.

SCH Title : PSoC™ 4000T CAPSENSE™ Evaluation Kit

Page Title: USB Interface and Power Supply

Size	Document Number	Drawn By	Approved By	Rev
A4	630-60615-01	Vamsi	Ronak	03

Date: Friday, June 23, 2023 Sheet 4 of 9

PSoC™ 5LP based KitProg3

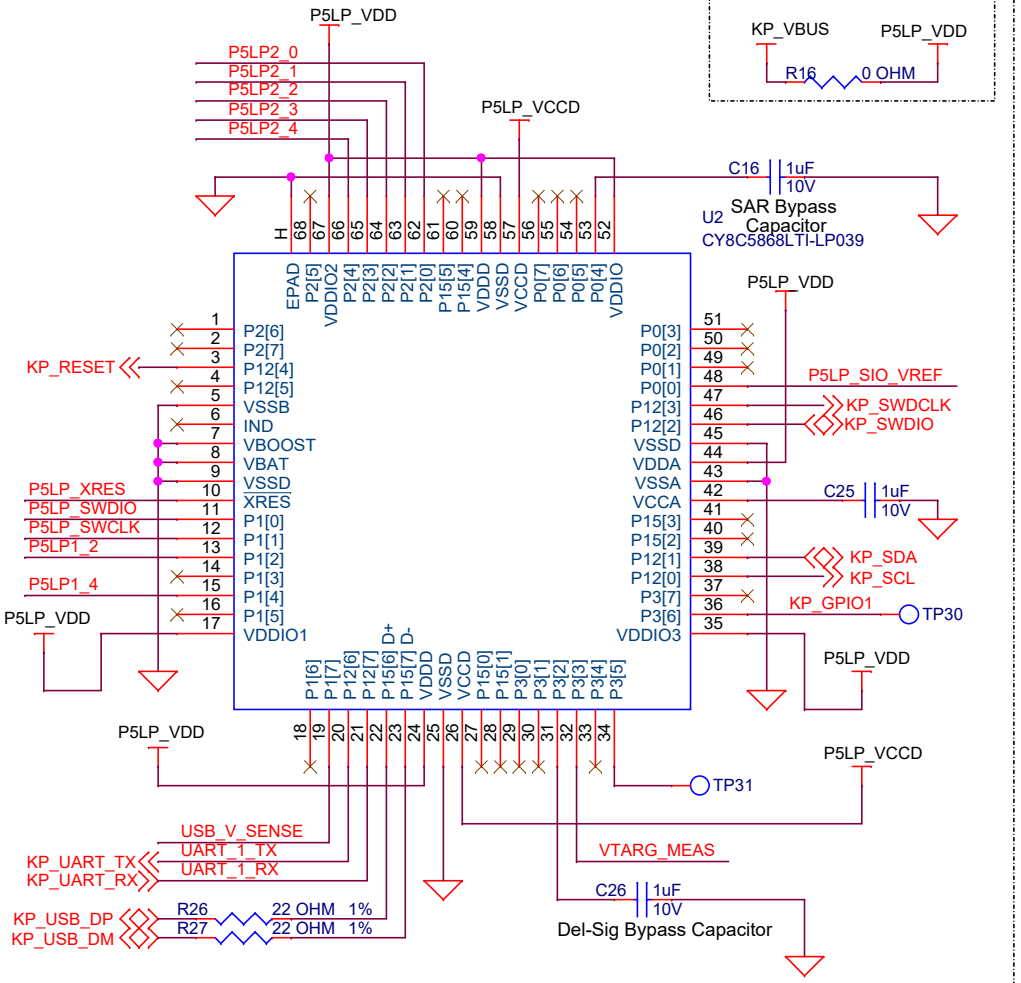

PSoC™ 5LP Power

Decoupling Capacitors

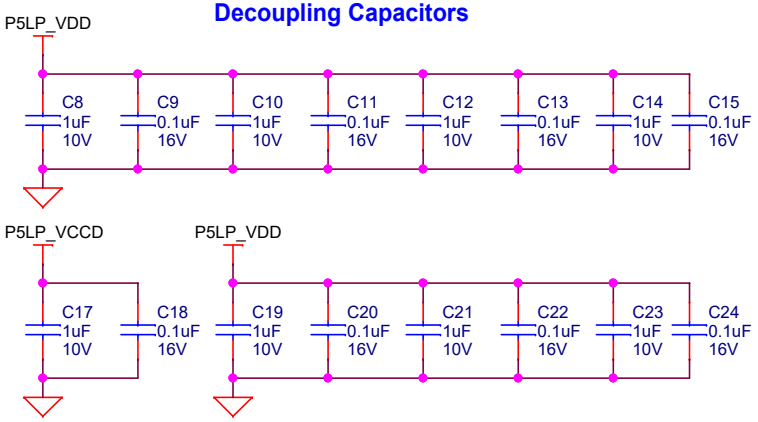

Voltage Monitoring

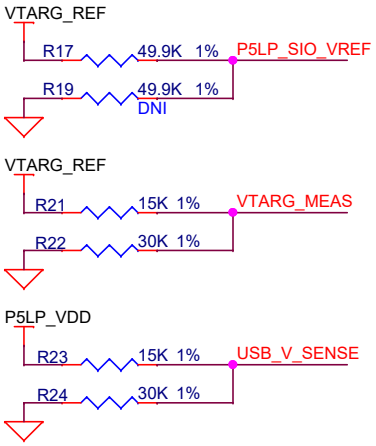

PSoC5LP Programming Header

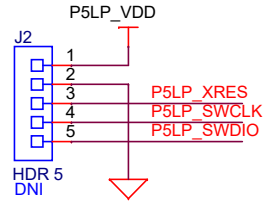

Note:
This is used for programing on board PSoC5LP with KitProg3 firmware

KitProg3 Status LED

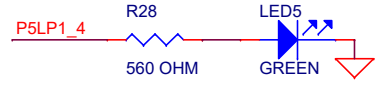

KitProg3 H/W Revision

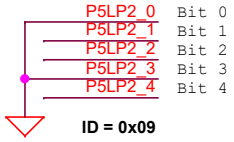

ID = 0x09

Note:
GND is read as binary "1" and floating as "0"

KitProg3 Mode Switch

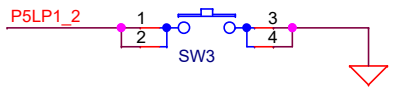

KitProg3 GPIO

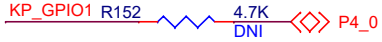

Legal Disclaimer :
The information given in this document shall in no event be regarded as a guarantee of conditions or characteristics. With respect to any examples or hints given herein, any typical values stated herein and/or any information regarding the application of the device, Infineon Technologies hereby disclaims any and all warranties and liabilities of any kind, including without limitation, warranties of non-infringement of intellectual property rights of any third party.

SCH Title : PSoC™ 4000T CAPSENSE™ Evaluation Kit

Page Title: KitProg3 Interface

Size	Document Number	Drawn By	Approved By	Rev
A4	630-60615-01	Vamsi	Ronak	03

Date: Friday, June 23, 2023 Sheet 5 of 9

PSoC™ 4000T Device IOs

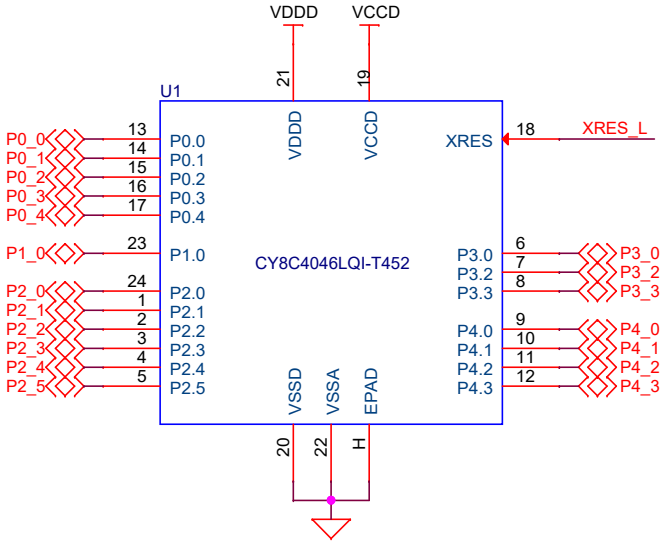

PSoC™ 4000T Device Power

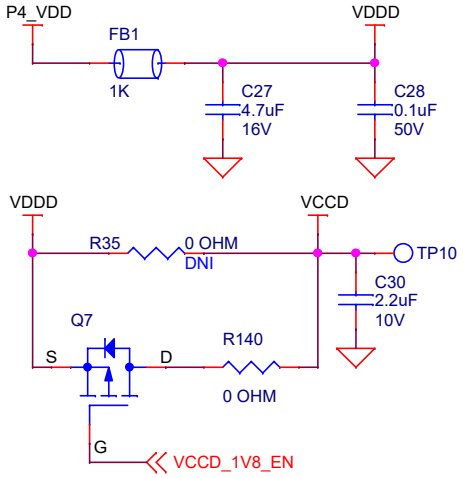

Note:
Q7 MOSFET will turn ON when 1.8V is selected using the slide switch SW2

PSoC™ 4000T Device 5-pin SWD Expansion Header

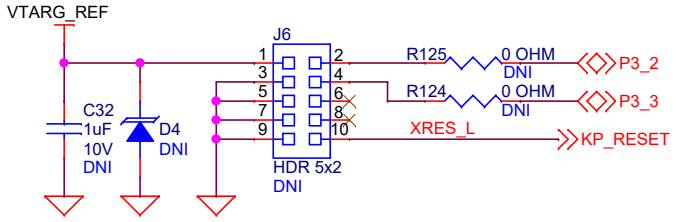

KitProg3 SWD interface

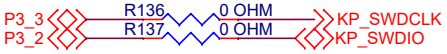

Note:
Unmount the R136, R137 and mount R125, R124 for External programmer interface

PSoC™ 4000T Device 3-pin I2C Expansion Header

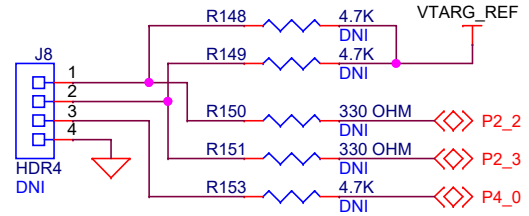

Note:
This header is for interfacing external I2C host devices.

KitProg3 I2C and UART Interface

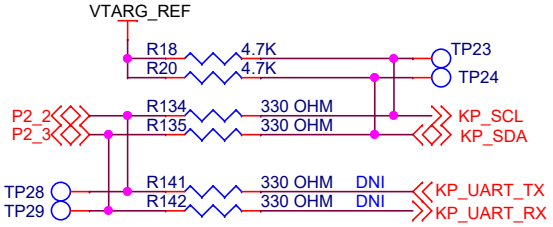

Note:
1. Unmount the R134, R135 and mount R141, R142 for UART interface.
2. SPI and UART SCB shares the same SCB cannot be used at same time

VTARG Reference Voltage

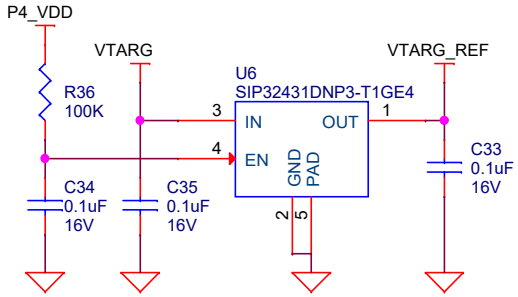

Reset Button

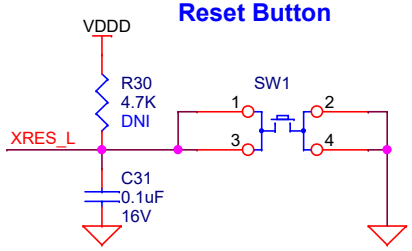

Legal Disclaimer :
The information given in this document shall in no event be regarded as a guarantee of conditions or characteristics. With respect to any examples or hints given herein, any typical values stated herein and/or any information regarding the application of the device, Infineon Technologies hereby disclaims any and all warranties and liabilities of any kind, including without limitation, warranties of non-infringement of intellectual property rights of any third party.

SCH Title : PSoC™ 4000T CAPSENSE™ Evaluation Kit

Page Title: PSoC™ 4000T Device Interface

Size	Document Number	Drawn By	Approved By	Rev
A4	630-60615-01	Vamsi	Ronak	03

Date: Friday, June 23, 2023 Sheet 6 of 9

Capacitive CSD Button and Hatch

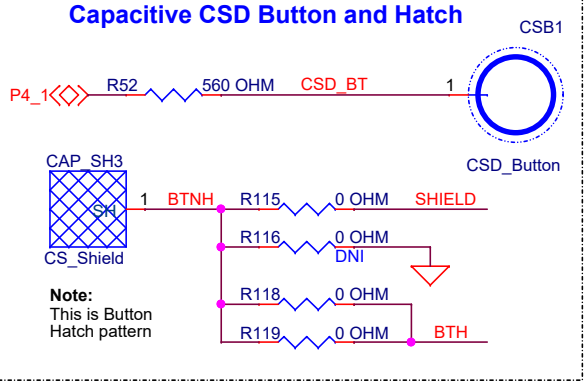

Note:
This is Button Hatch pattern

Capacitive 4x5 TouchPad

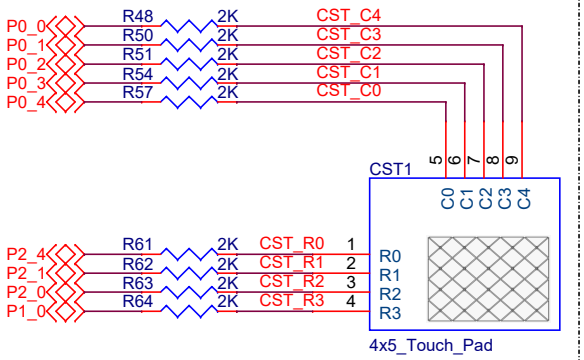

CAPSENSE™ Shield

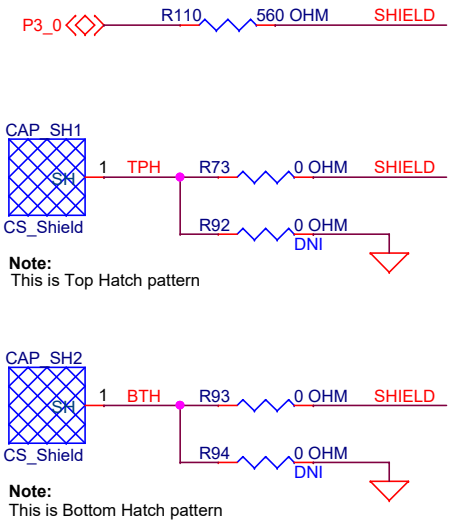

Note:
This is Top Hatch pattern

Note:
This is Bottom Hatch pattern

Capacitive Proximity Sensor

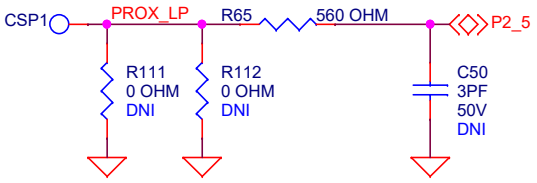

CMOD Capacitors

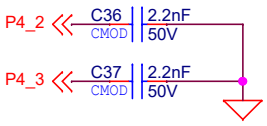

Serial RGB LED

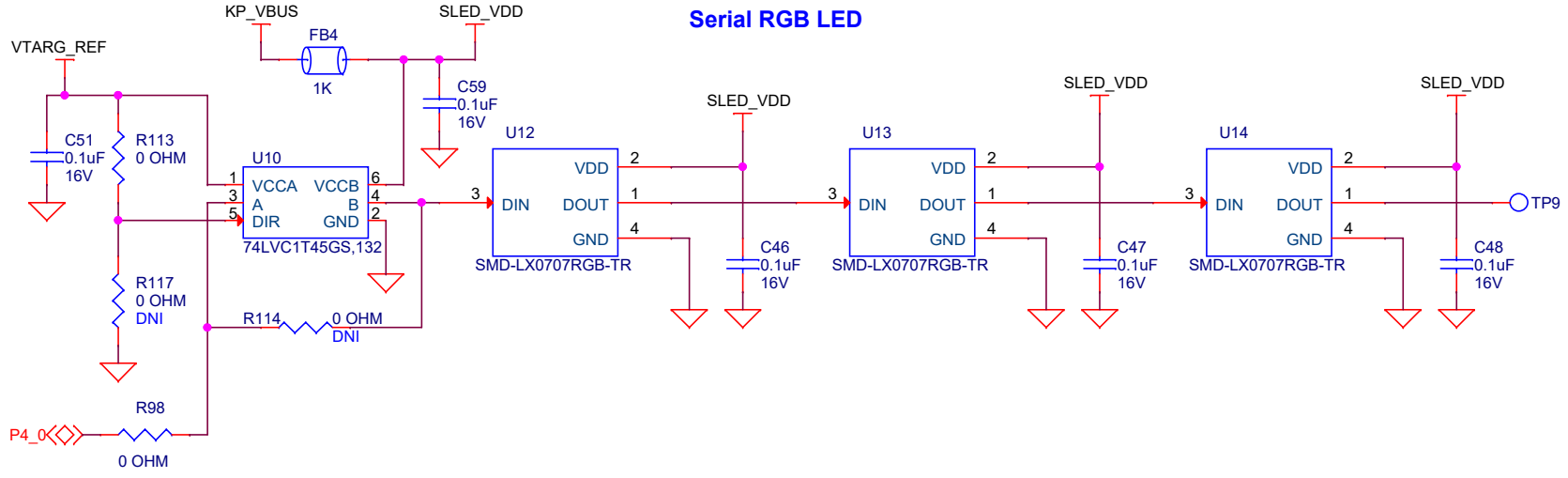

User LED

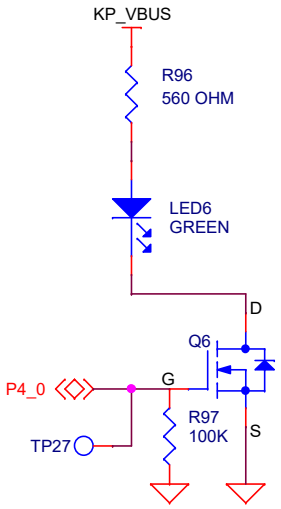

Legal Disclaimer :
The information given in this document shall in no event be regarded as a guarantee of conditions or characteristics. With respect to any examples or hints given herein, any typical values stated herein and/or any information regarding the application of the device, Infineon Technologies hereby disclaims any and all warranties and liabilities of any kind, including without limitation, warranties of non-infringement of intellectual property rights of any third party.

SCH Title : PSoC™ 4000T CAPSENSE™ Evaluation Kit

Page Title: Capacitive sensor's and onboard Peripherals

Size	Document Number	Drawn By	Approved By	Rev
A4	630-60615-01	Vamsi	Ronak	03

Date: Friday, June 23, 2023 Sheet 7 of 9

Accessories

USB Cable

ACC6

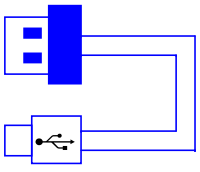

USB Micro-B Cable

Jumper Shunt

ACC7

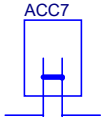

151-8010-E

QR Code Label

ACC9

QR CODE Label

PCBA Label

ACC8

PCA Label

Water Dropper

ACC10



Water Dropper

Legal Disclaimer :
The information given in this document shall in no event be regarded as a guarantee of conditions or characteristics. With respect to any examples or hints given herein, any typical values stated herein and/or any information regarding the application of the device, Infineon Technologies hereby disclaims any and all warranties and liabilities of any kind, including without limitation, warranties of non-infringement of intellectual property rights of any third party.

SCH Title : PSoC™ 4000T CAPSENSE™ Evaluation Kit

Page Title: On-board Peripherals and Accessories

Size	Document Number	Drawn By	Approved By	Rev
A4	630-60615-01	Vamsi	Ronak	03

Date: Friday, June 23, 2023

REVISION HISTORY

REV	DESCRIPTION OF CHANGE	DATE
1.00	Initial Release	2021/12/22
2.00	1. Added additional header for I2C interface 2. Updated Pin assignment of MCU 3. Updated the LDO and VCCD powering sections 4. Updated capacitive button dimensions	2022/02/15
3.00	1. Updated decap value for PSoC 4000T 2. Updated Voltage regulator section 3. Updated the I2C header interface 4. Updated few component packages to 0603 5. final release	2022/12/06

Legal Disclaimer :
The information given in this document shall in no event be regarded as a guarantee of conditions or characteristics. With respect to any examples or hints given herein, any typical values stated herein and/or any information regarding the application of the device, Infineon Technologies hereby disclaims any and all warranties and liabilities of any kind, including without limitation, warranties of non-infringement of intellectual property rights of any third party.