CY8C42 FAMILY PROCESSOR MODULE

J2

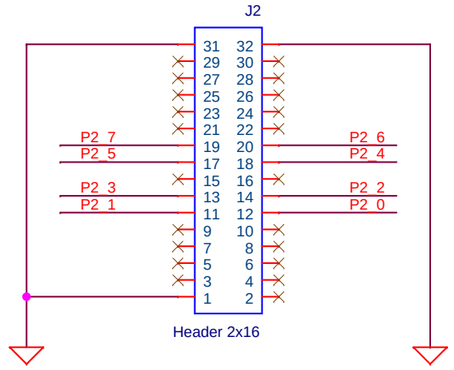

J3

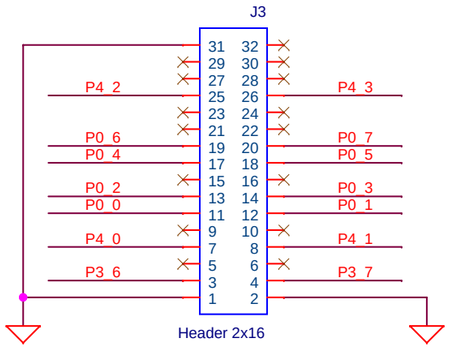

Shunt Resistor

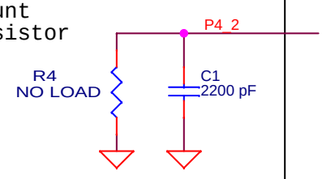

CAPSENSE TUNING CIRCUITRY
Default Loaded For CSD

SWDProgramming Interface

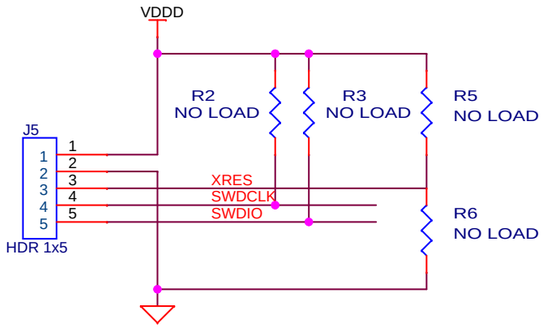

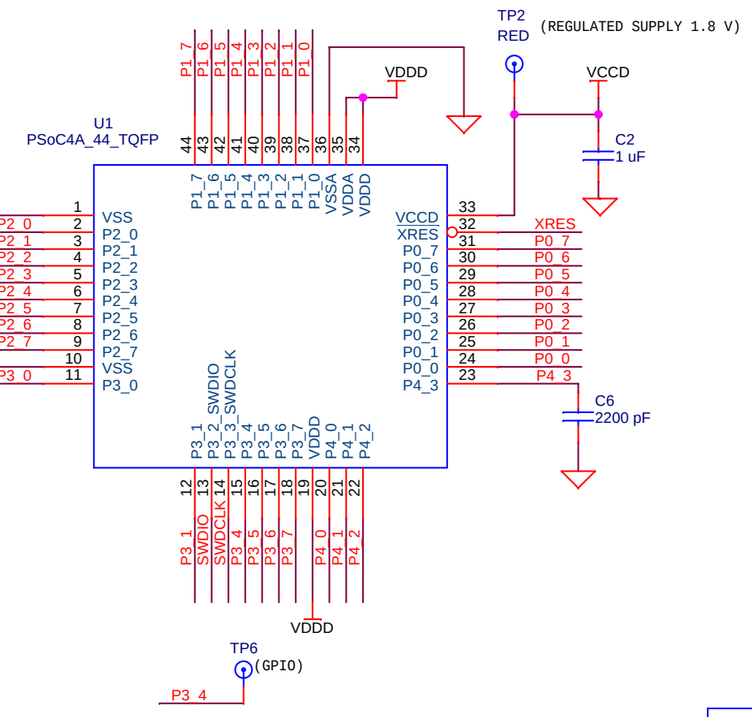

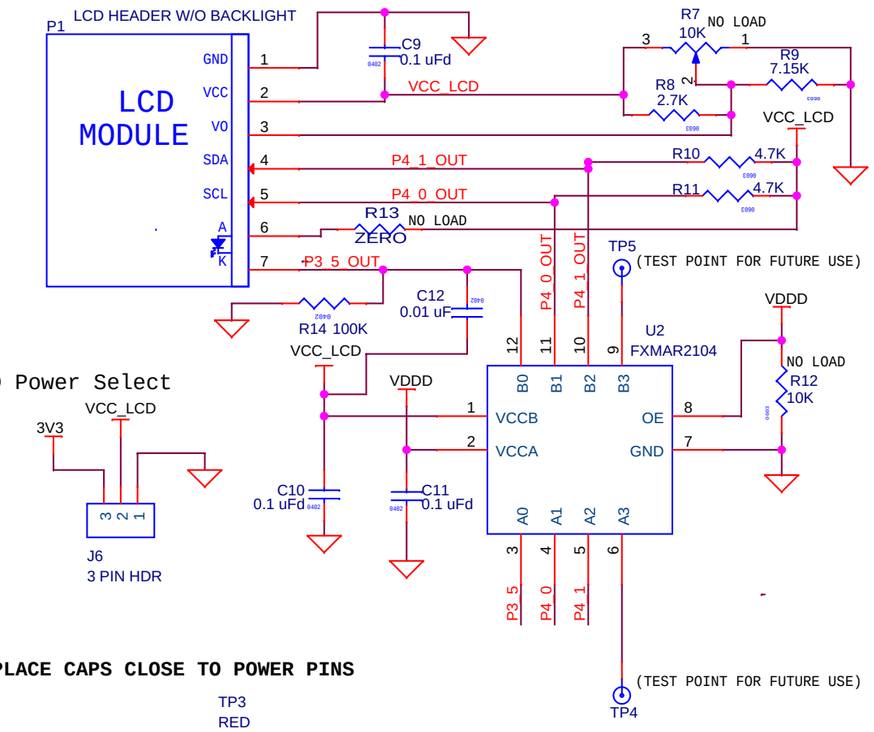

LCD Power Select

PLACE CAPS CLOSE TO POWER PINS

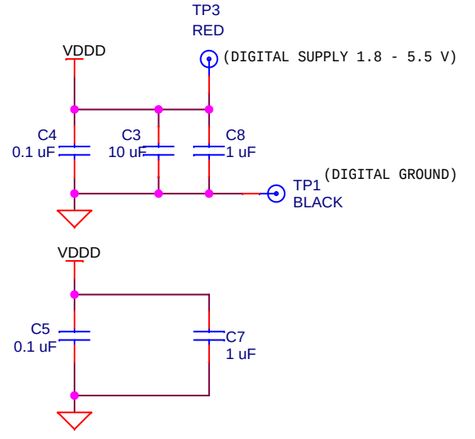

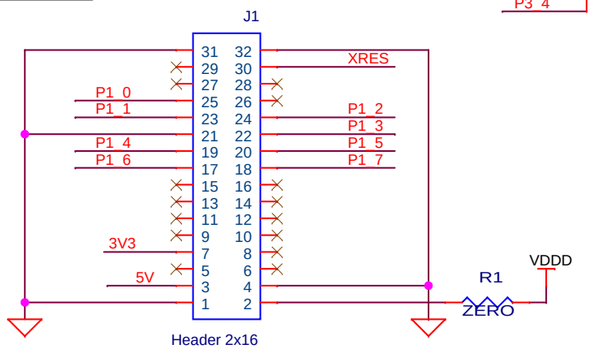

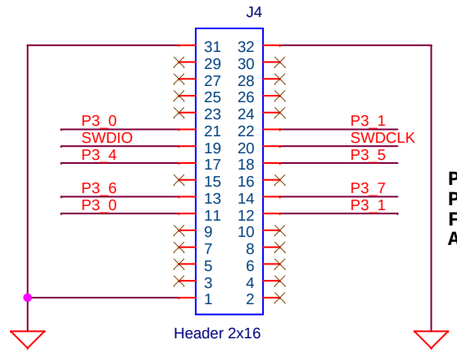

PCA: 121-60038-01
PCB: 600-60048-01
FAB DRW: 610-60046-01
ASSY DRW: 620-60048-01

CYPRESS SEMICONDUCTOR © 2012

Title: CY8CKIT-038 44 PIN TQFP		
Size: B	Document Number: 630-60048-01	Rev: 05
Date: Wednesday, April 03, 2013	Sheet 1 of 1	