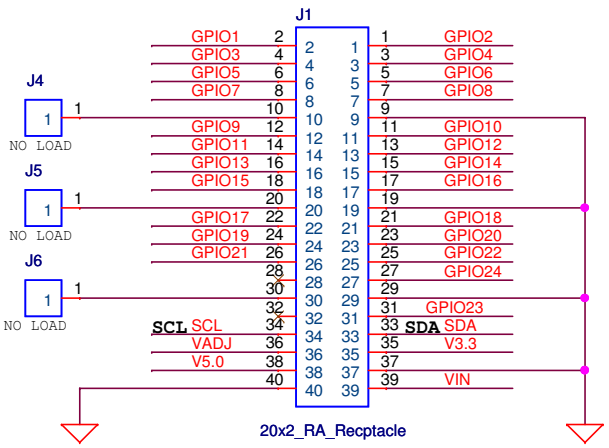

From Expansion Connector of DVK

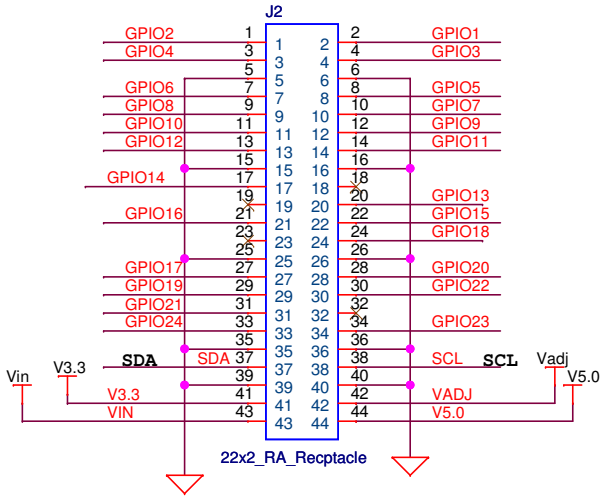

To CapSense Connector

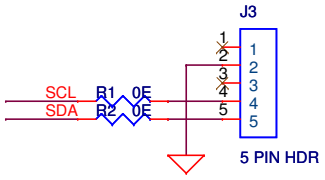

I2USB Connector

CYPRESS SEMICONDUCTOR © 2011		
Title: CY8CKIT-031 PSoC CapSense Expansion Board Kit		
Size: A4	Document Number: REF-15101	Rev: **
Date: Thursday, January 06, 2011	Sheet 1 of 1	

120-09801-0
PDC-09801