# CY8CKIT-028-EPD E-INK Display Shield

## CONTENTS


| PAGE | DESCRIPTION |
|---|---|
| 01 | Title, Table of Contents & Drawing Numbers |
| 02 | Block Diagram |
| 03 | 2.7" EPD Shield Schematics |
| 04 | Revision History |


| Drawing Numbers | |
|---|---|
| PCBA | 121-60364-01 |
| PCB | 600-60379-01 |
| FAB DRW | 610-60336-01 |
| ASSY DRW | 620-60344-01 |
| SCH DRW | 630-60356-01 |


CYPRESS SEMICONDUCTOR
198 CHAMPION COURT
SAN JOSE, CA 95134
(408) 943-2600



CYPRESS SEMICONDUCTOR © 2018


SCH Title : CY8CKIT-028-EPD E-INK Display Shield

Page Title : Title Page

| Size | Document Number | Drawn By | Approved By | Rev |
|---|---|---|---|---|
| A3 | 630-60356-01 | AARA | RKPM | 05 |

Date: Wednesday, January 17, 2018 Sheet 1 of 4

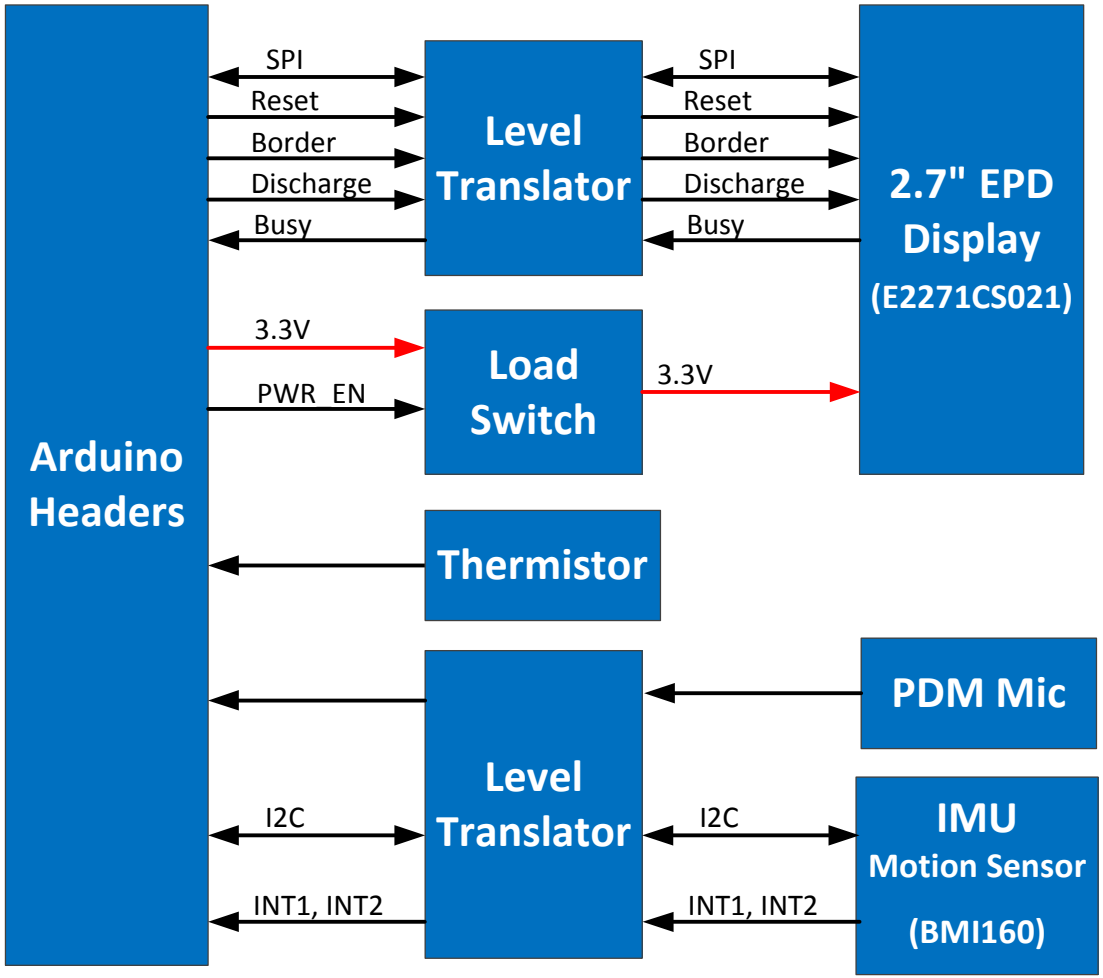


CYPRESS SEMICONDUCTOR
198 CHAMPION COURT
SAN JOSE, CA 95134
(408) 943-2600

CYPRESS SEMICONDUCTOR © 2018

| | | | | |
|---|---|---|---|---|
| SCH Title : CY8CKIT-028-EPD E-INK Display Shield | | | | |
| Page Title : Block Diagram | | | | |
| Size: A3 | Document Number: 630-60356-01 | Drawn By: AARA | Approved By: RKPM | Rev: 05 |
| Date: Wednesday, January 17, 2018 | | Sheet 2 of 4 | | |

## Arduino Headers

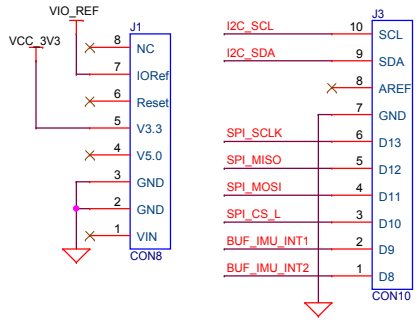


## EPD Power Enable

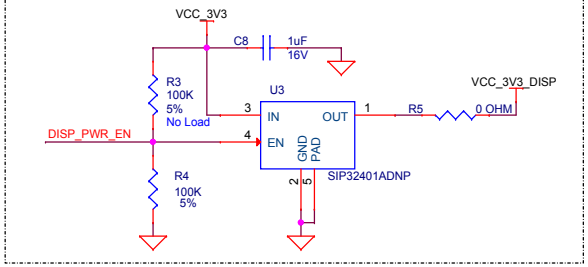


## EPD Discharge

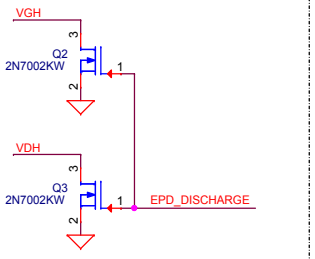


## EPD Display Connector

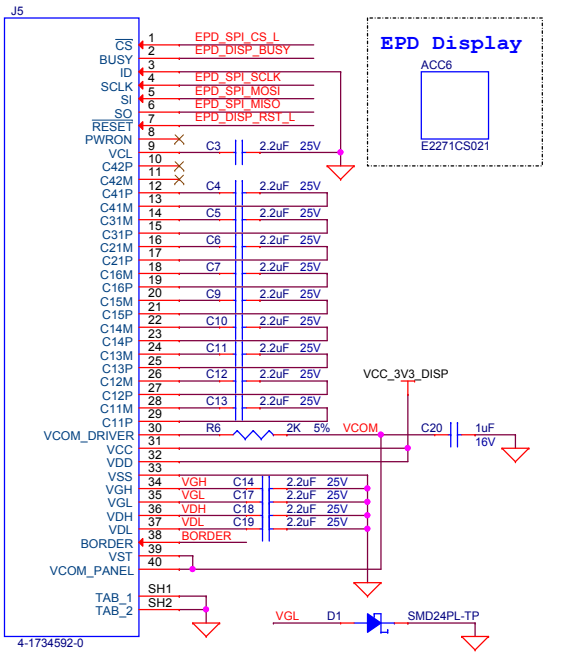


## Level Translator for EPD

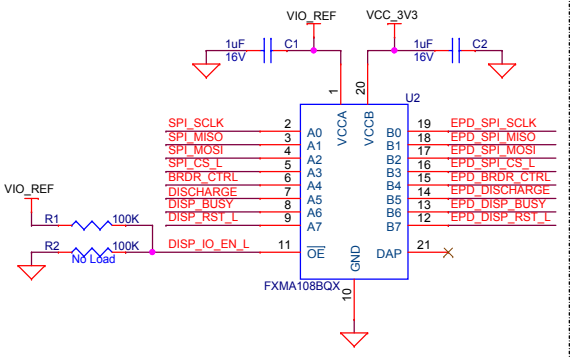


## EPD Border Control

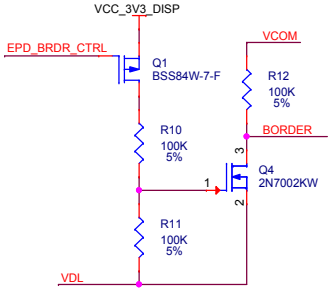


## Thermistor

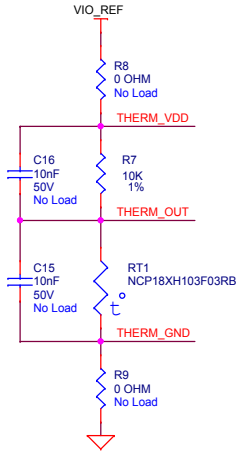


## Level Translator for IMU & PDM MIC

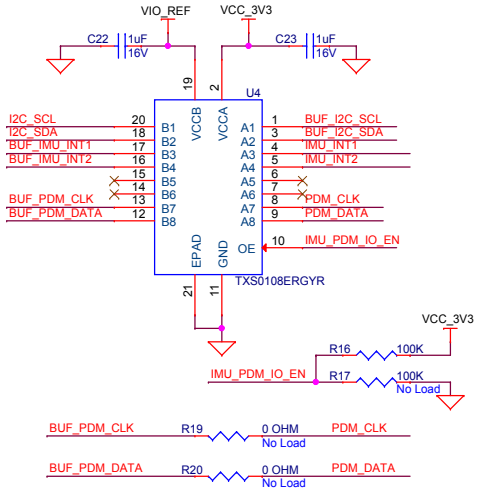


## Inertial Measurement Unit (IMU)

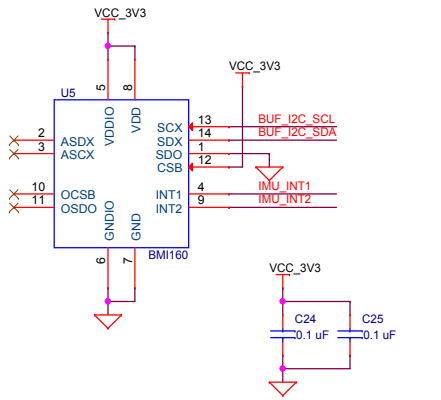


## PDM MIC

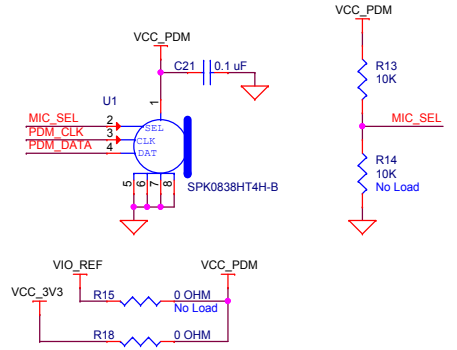


TP1
BLACK
No Load


CYPRESS SEMICONDUCTOR
198 CHAMPION COURT
SAN JOSE, CA 95134
(408) 943-2600



CYPRESS SEMICONDUCTOR © 2018


| | | | | |
|---|---|---|---|---|
| SCH Title : CY8CKIT-028-EPD E-INK Display Shield | | | | |
| Page Title : 2.7" EPD Shield Schematics | | | | |
| Size: A3 | Document Number: 630-60356-01 | Drawn By: AARA | Approved By: RKPM | Rev: 05 |
| Date: Wednesday, January 17, 2018 | | Sheet 3 of 4 | | |

# REVISION HISTORY

| REV | DESCRIPTION OF CHANGE | DATE |
|---|---|---|
| 01 | Initial internal release | 2016/07/11 |
| 02 | Internal release, PDM Mic added | 2016/11/04 |
| 03 | External release under NDA | 2017/03/10 |
| 04 | Motion Sensor Added | 2017/07/18 |
| 05 | Updated footprint for C1005X5R1E225M050BC to class-B (CAPC1005X55N) | 2017/09/21 |
| | | |
| | | |
| | | |
| | | |
| | | |
| | | |
| | | |
| | | |
| | | |

CYPRESS SEMICONDUCTOR
198 CHAMPION COURT
SAN JOSE, CA 95134
(408) 943-2600

CYPRESS SEMICONDUCTOR © 2018

SCH Title : CY8CKIT-028-EPD E-INK Display Shield

Page Title : Revision History

| Size | Document Number | Drawn By | Approved By | Rev |
|---|---|---|---|---|
| A3 | 630-60356-01 | AARA | RKPM | 05 |

Date: Wednesday, January 17, 2018 | Sheet 4 of 4