REVISIONS			
REV	DESCRIPTION	DATE	APPROVED
01	ALPHA RELEASE	04/24/14	VRNK
02	BETA RELEASE	05/07/14	VRNK
03	PRODUCTION RELEASE	06/10/14	VRNK

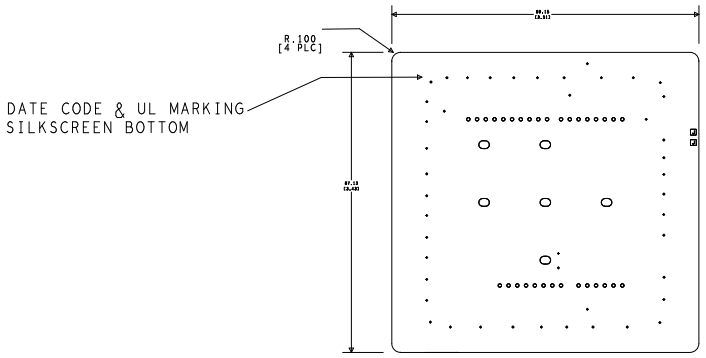

DRILL CHART: PROXIMITY-SHIELD				
ALL UNITS ARE IN MILS				
FIGURE	SIZE	TOLERANCE	PLATED	QTY
·	10.0	+3.0/-10.0	PLATED	45
○	40.0	+3.0/-3.0	PLATED	32
⊡	35.4	+0.0/-0.0	NON-PLATED	2
○	120.0x90.0	+3.0/-3.0	NON-PLATED	6

NOTES:(UNLESS OTHERWISE SPECIFIED)

1. RoHS COMPLIANT CERTIFICATION OR MATERIAL DECLARATION REQUIRED
2. MATERIAL:
   A. IS410 OR EQUIVALENT. MATERIAL MUST CONFORM TO UL94V-0.
   B. USE HTE COPPER, AS SPECIFIED IN THE CROSS SECTION DIAGRAM
   C. OVERALL METAL TO METAL THICKNESS AS SPECIFIED IN THE CROSS SECTION
3. DRILLING:
   A. DIAMETERS IN DRILL TABLE ARE FINISHED HOLE SIZES +/-.003 tol. UNLESS OTHERWISE SPECIFIED IN DRILL TABLE.
   B. TEARDROP ALLOWED ON ENTRY OF VIA ON EVERY TRACE LAYER.
4. PLATING:
   COPPER PLATING IN THRU-HOLES .001 min.
5. MARKING:
   A. SILKSCREEN IN WHITE NON-CONDUCTIVE EPOXY INK ON PRIMARY SIDE OF THE BOARD OR BOTH SIDES IF APPLICABLE.
   B. FABRICATOR TO PLACE DATE CODE AND LOGO ON SECONDARY SIDE IN ETCH (PREFERRED) OR SILKSCREEN.
6. FINAL FABRICATION:
   A. SOLDRMASK PRIMARY AND SECONDARY SIDE OF BOARD USING LIQUID PHOTOIMAGABLE MASK MATERIAL OVER BARE COPPER. PER IPC-SM-840. MASK ARTWORKS PROVIDED ARE 1:1. SOLDERMASK COLOR **BLACK**
7. FINISH:
   A. SHALL BE ELECTROLYTIC NICKEL/GOLD. ELECTROLESS NIKEL / IMMERSION GOLD. (ENIG)
   B. NICKEL THICKNESS: 100-200 MICROINCHES.
   C. GOLD THICKNESS: 3-10 MICROINCHES.
8. BOARDS SHALL BE PURCHASED FROM UL RECOGNIZED VENDORS ONLY AND SHALL BE MARKED IN COPPER ON SECONDARY SIDE OF BOARD WITH VENDORS UL IDENT. FLAMABILITY RATING (94-V0), DATE CODE (WWYY), AND RoHS COMPILANT SYMBOL.
9. MANUFACTURE BOARD TO BE IN ACCORDANCE WITH PERFORMANCE STANDARD IPC-6011/6012 CLASS 2 BOARD TO BE INSPECTED PER IPC-600-A CLASS 2.
10. MAXIMUM WRAP OR TWIST SHALL NOT EXCEED .007 in/in.
11. TESTING:
   A. FABRICATOR TO ADD TEST STRUCTURES OR CUPONS AS NEEDED.
   B. T-LINE IMPEDENCE TO BE TESTED OR GUARANTEE WITHIN 10% IF SPECIFIED IN THE CROSS SECTION. TOLERANCE TO BE +/-10% UNLESS OTHERWISE SPECIFIED.

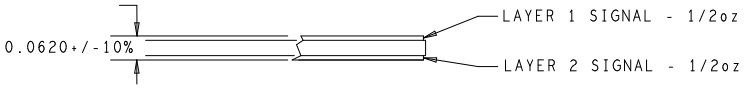

UNLESS OTHERWISE SPECIFIED	SIGNATURES		DATE
DIMENSIONS ARE IN INCHES TOLERANCES ON; ANGLES +/- 2° 2 PL DECIMALS +/- .010 3 PL DECIMALS +/- .005 THIRD ANGLE PROJECTIONS	DRAWN	PRAO	06/10/14
	CHECKED	VRNK	06/10/14
	ENGRG	VRNK	06/10/14
	ISSUED		

CYPRESS PROPRIETARY
THIS DOCUMENT CONTAINS CONFIDENTAL, PROPRIETARY INFORMATION THAT IS CYPRESS SEMICONDUCTOR PROPERTY. DO NOT DISCLOSE TO OR DUPLICATE FOR OTHERS EXCEPT AS AUTHORIZED BY CYPRESS.

CYPRESS SEMICONDUCTOR
198 CHAMPION COURT
SAN JOSE, CA 95134
(408) 943-2600

FABRICATION DRAWING
CY8CKIT-024
CAPSENSE PROXIMITY SHIELD

SIZE	FSCM NO	DWG NO	REV
C		610-60195-01	03

SCALE: 1/1 SHEET: 1 OF 1

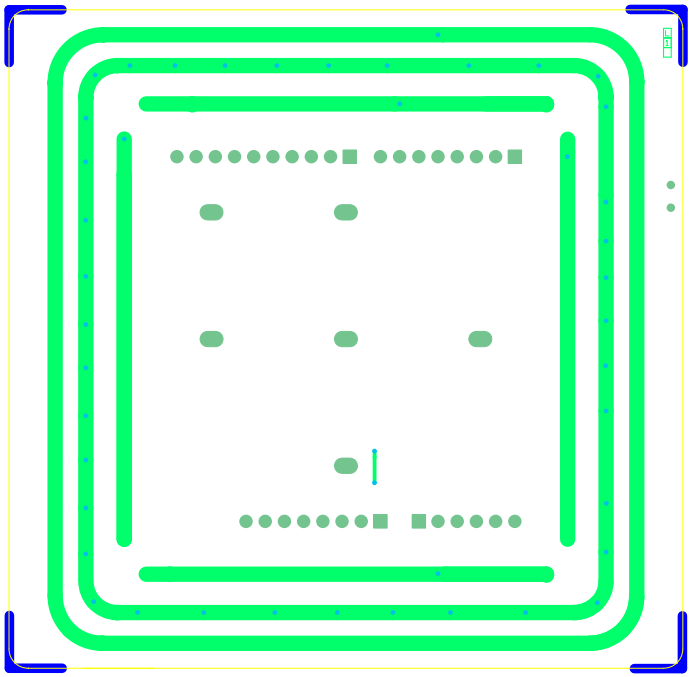

600-60203-01 REV03 PRIMARY SIDE

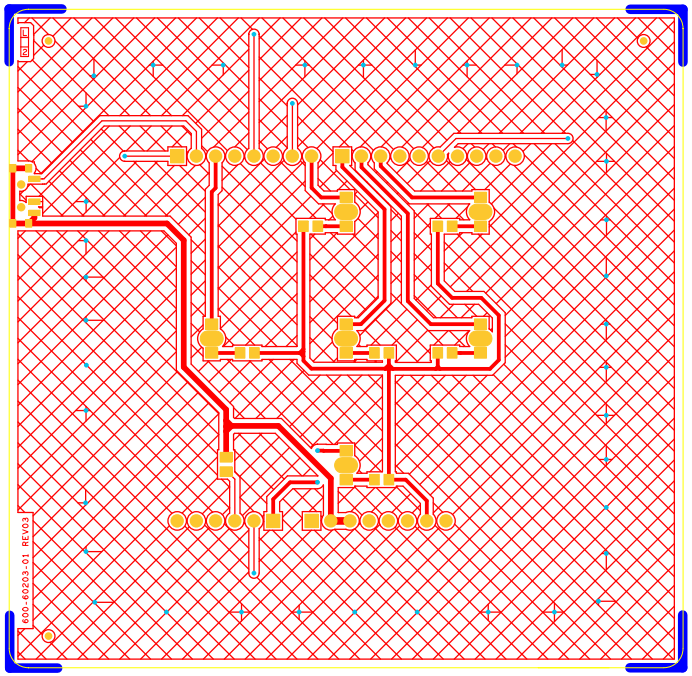

600-60203-01 REV03 SECONDARY SIDE

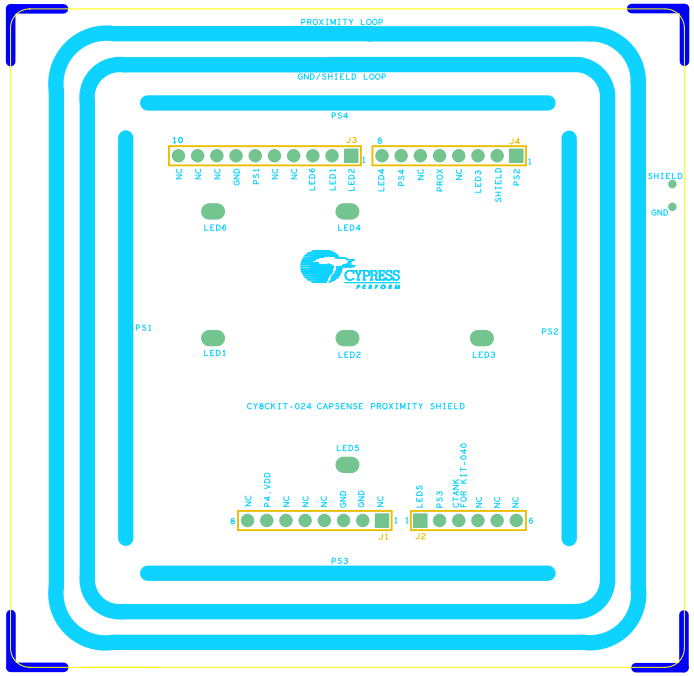

600-60203-01 REV03 PRIMARY SILKSCREEN

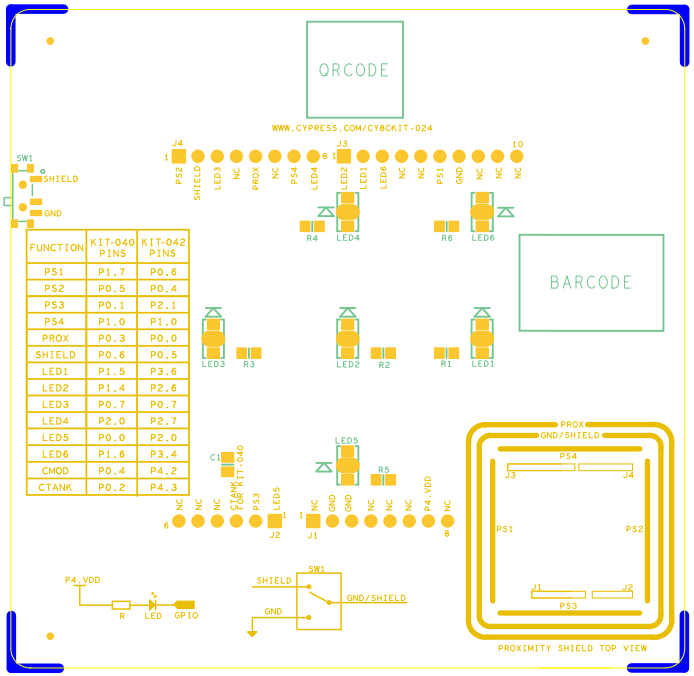

FUNCTION	KIT-040 PINS	KIT-042 PINS
PS1	P1.7	P0.6
PS2	P0.5	P0.4
PS3	P0.1	P2.1
PS4	P1.0	P1.0
PROX	P0.3	P0.0
SHIELD	P0.6	P0.5
LED1	P1.5	P3.6
LED2	P1.4	P2.6
LED3	P0.7	P0.7
LED4	P2.0	P2.7
LED5	P0.0	P2.0
LED6	P1.6	P3.4
CMOD	P0.4	P4.2
CTANK	P0.2	P4.3

600-60203-01 REV03 SECONDARY SILKSCREEN