REVISIONS			
REV	DESCRIPTION	DATE	APPROVED
01	ALPHA RELEASE	04/24/14	VRNK
02	BETA RELEASE	05/07/14	VRNK
03	PRODUCTION RELEASE	06/10/14	VRNK

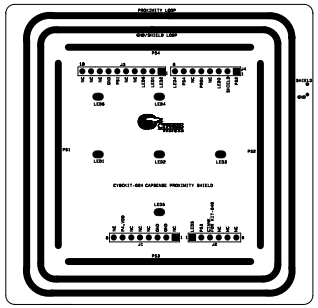

PRIMARY SIDE

600-60203-01 REV03 PRIMARY SILKSCREEN

IMPORTANT NOTE:

1. For details on assembling the connectors(J1-J4) on the board,
   Refer the Special PCB Assembly Instructions (Arena P/N:940-60265-01).

UNLESS OTHERWISE SPECIFIED	SIGNATURES		DATE
DIMENSIONS ARE IN INCHES	DRAWN	PRAO	06/10/14
TOLERANCES ON; ANGLES +/- 2°	CHECKED	VRNK	06/10/14
2 PL DECIMALS +/- .010	ENGRG	VRNK	06/10/14
3 PL DECIMALS +/- .005	ISSUED		
THIRD ANGLE PROJECTIONS			

CYPRESS PROPRIETARY
THIS DOCUMENT CONTAINS CONFIDENTIAL, PROPRIETARY INFORMATION THAT IS CYPRESS SEMICONDUCTOR PROPERTY. DO NOT DISCLOSE TO OR DUPLICATE FOR OTHERS EXCEPT AS AUTHORIZED BY CYPRESS.

CYPRESS SEMICONDUCTOR
198 CHAMPION COURT
SAN JOSE, CA 95134
(408) 943-2600

ASSEMBLY DRAWING
CY8CKIT-024
CAPSENSE PROXIMITY SHIELD

SIZE	FSCM NO	DWG NO	REV
C		620-60203-01	03

SCALE: 1/1 SHEET: 1 OF 2

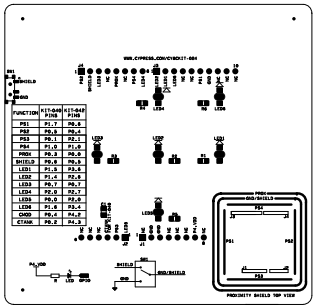

SECONDARY SIDE

600-60203-01 REV03 SECONDARY SILKSCREEN

CYPRESS SEMICONDUCTOR
198 CHAMPION COURT
SAN JOSE, CA 95134
(408) 943-2600

ASSEMBLY DRAWING
CY8CKIT-024
CPASENSE PROXIMITY SHIELD

SIZE	FSCM NO	DWG NO	REV
C		620-60203-01	03

SCALE: 1/1 SHEET: 2 OF 2