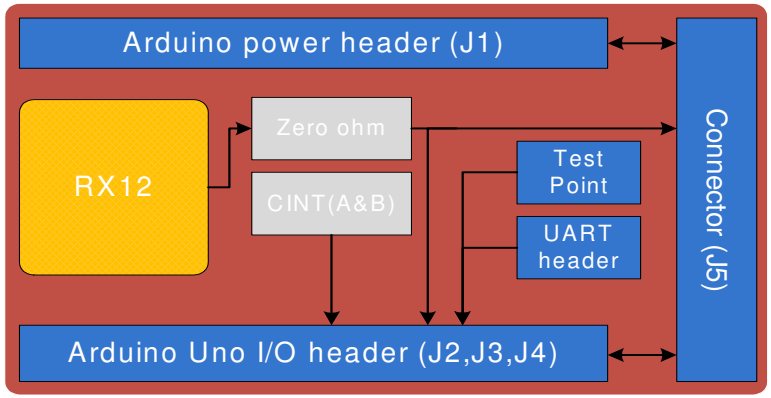

Liquid Level Sensor Shield

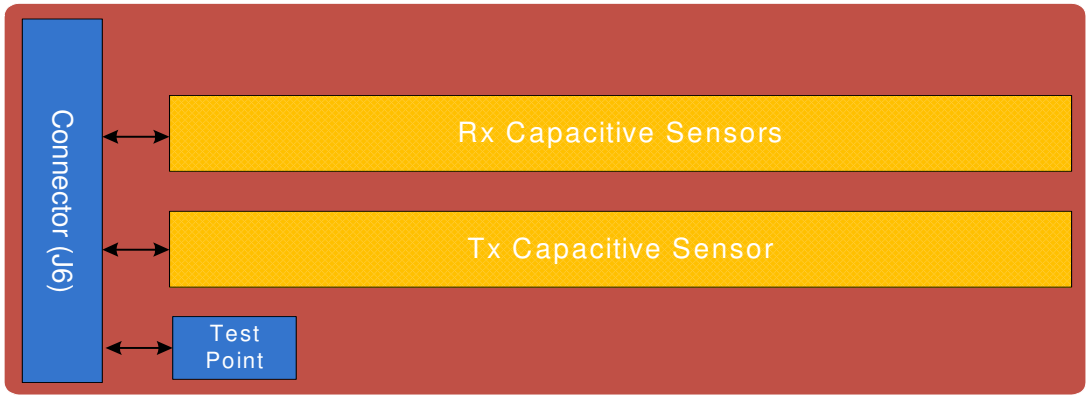

Liquid Level Sensor Flex

Copper | Connector | Component

PCA: 121-60255-01
PCB: 600-60288-01
FAB DRW: 610-60279-01
ASSY DRW: 620-60287-01

CYPRESS SEMICONDUCTOR © 2015

Title	CY8CKIT-022 PSoC® Liquid Level Sensing Shield	
Size A	Document Number 630-60285-01	Rev 05
Date: Thursday, November 26, 2015	Sheet 1 of 2	

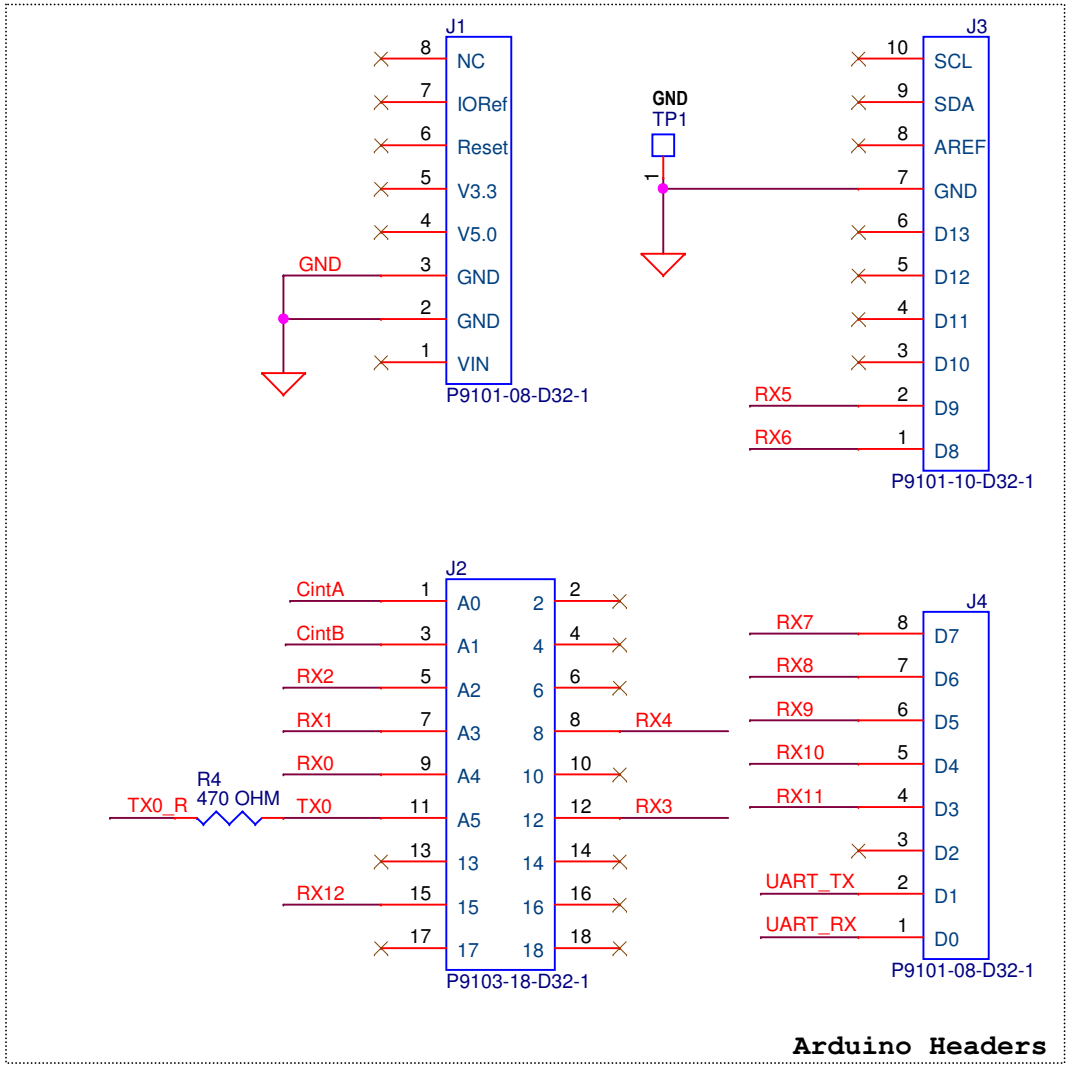

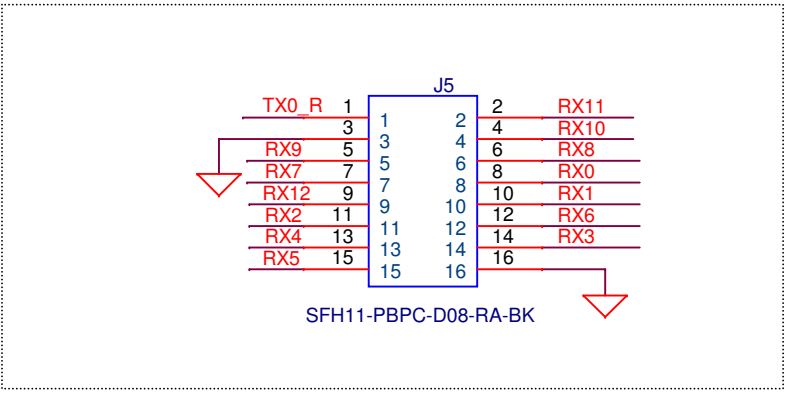

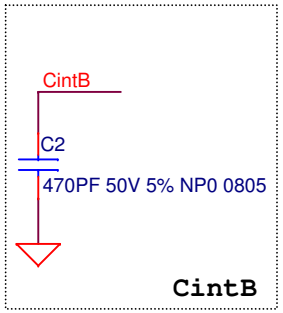

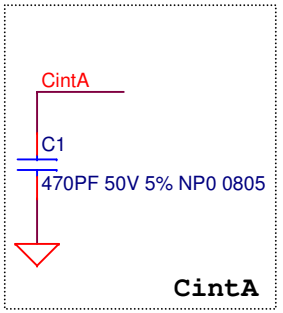

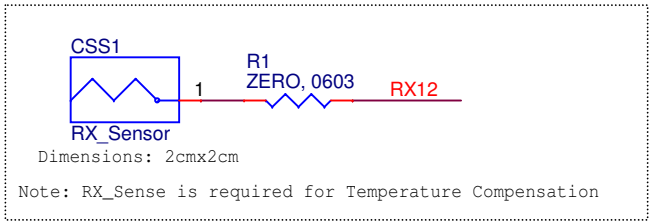

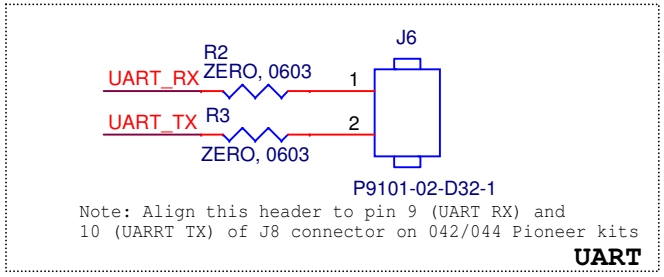

PCA: 121-60255-01
PCB: 600-60288-01
FAB DRW: 610-60279-01
ASSY DRW: 620-60287-01

CYPRESS SEMICONDUCTOR © 2015		
Title: CY8CKIT-022 PSoC® Liquid Level Sensing Shield		
Size: A	Document Number: 630-60285-01	Rev: 05
Date: Thursday, November 26, 2015	Sheet 2 of 2	