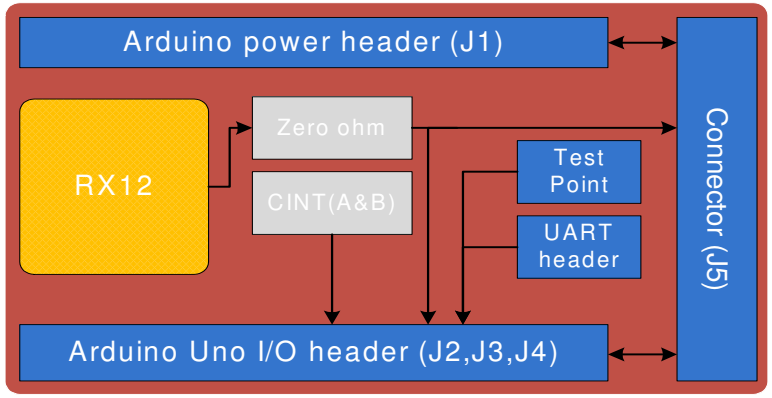

Liquid Level Sensor Shield

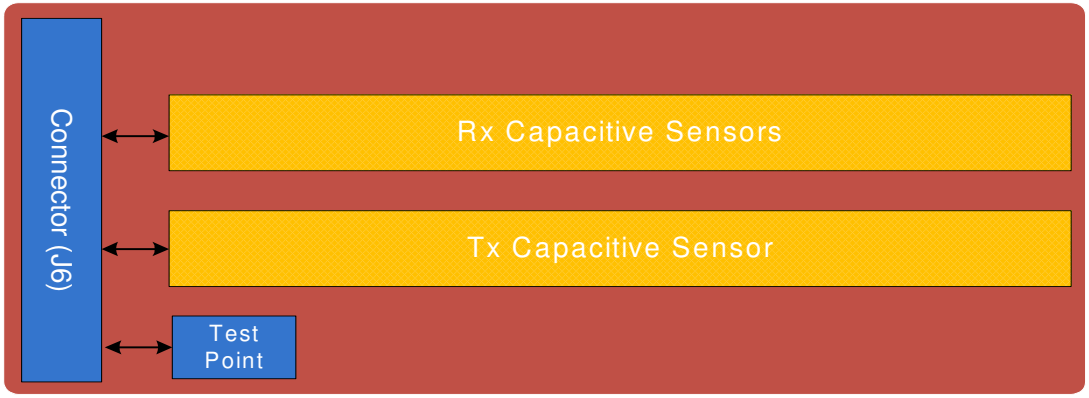

Liquid Level Sensor Flex

Copper | Connector | Component

PCA: 121-60309-01
PCB: 600-60331-01
FAB DRW: 610-60303-01
ASSY DRW: 620-60311-01

CYPRESS SEMICONDUCTOR © 2015

Title: CY8CKIT-022 CapSense® Liquid Level Sensing 12 Sensor Flex		
Size: A	Document Number: 630-60309-01	Rev: 04
Date: Thursday, November 26, 2015	Sheet 1 of 2	

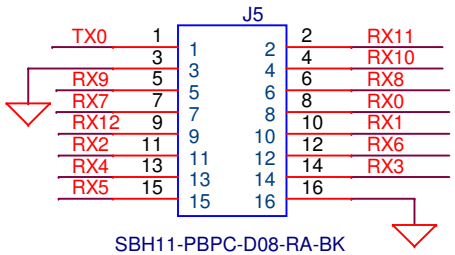

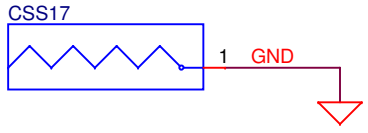

GND Hatch Dimensions: 2x168mm

Note: GND is required to isolate portion of E field that projects into liquid. Minimizes E field that cuts across PCB and never enters liquid

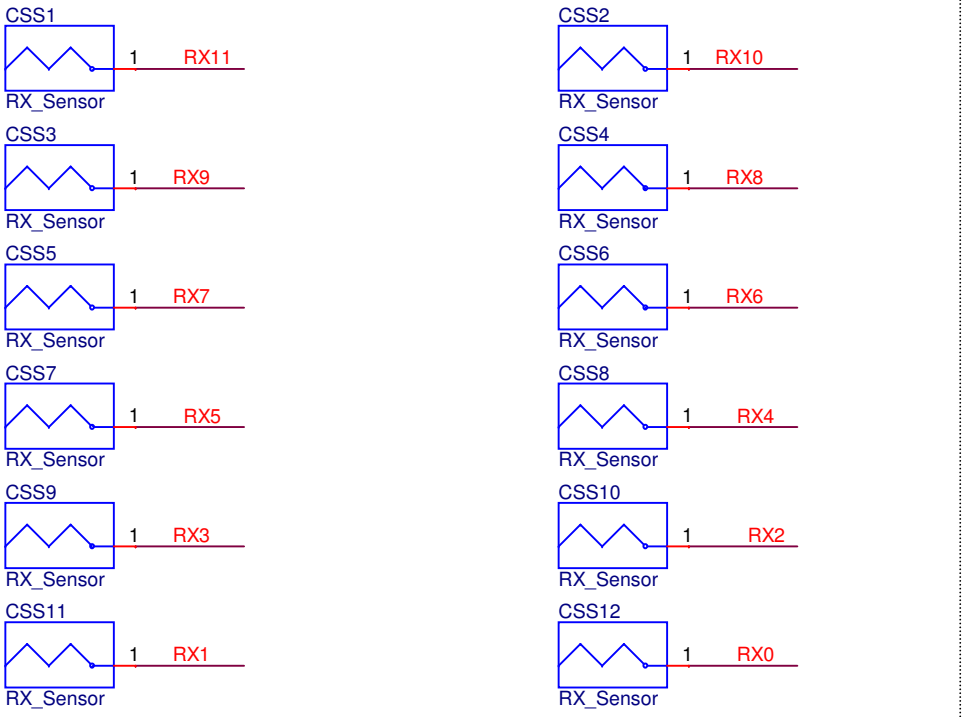

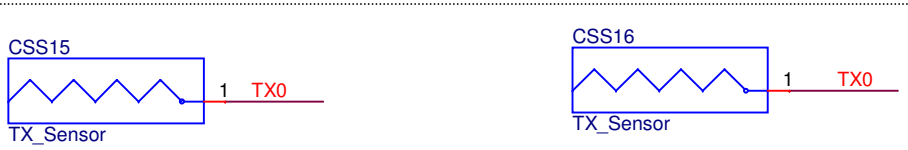

Note: 470 Ohm Resistor is provided to check the CapSense Performance

PCA: 121-60309-01
PCB: 600-60331-01
FAB DRW: 610-60303-01
ASSY DRW: 620-60311-01

CYPRESS SEMICONDUCTOR © 2015

Title
CY8CKIT-022 CapSense® Liquid Level Sensing 12 Sensor Flex

Size	Document Number	Rev
A	**630-60309-01**	**04**

Date: Thursday, November 26, 2015 Sheet 2 of 2