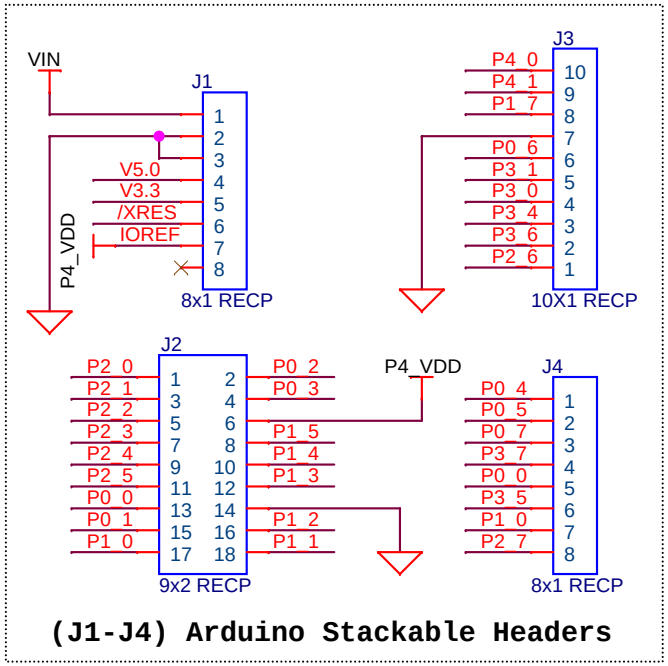

(J1-J4) Arduino Stackable Headers

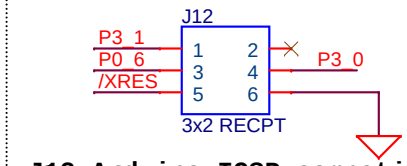

J12 Arduino ICSP compatible header for SPI Interface

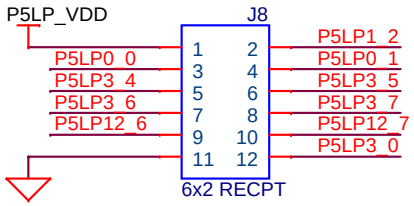

NOTE: The PSoC 5LP Pins on J8 only bring out the Pins from the Pioneer Kit and they are not connected anywhere else in this board.

PSoC 5LP GPIO Extension Header

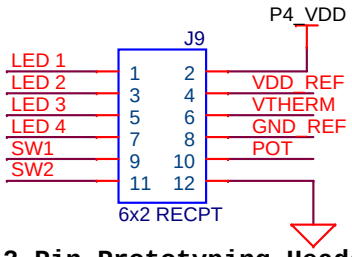

12 Pin Prototyping Header

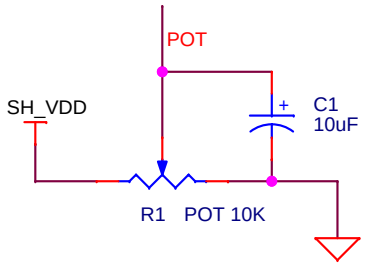

Potentiometer

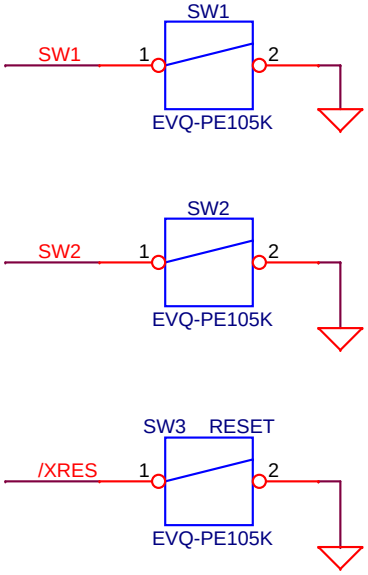

Push Buttons

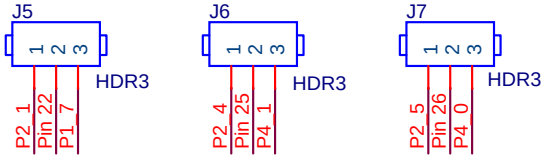

3 Pin Jumpers

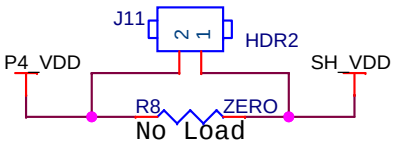

Power Jumper

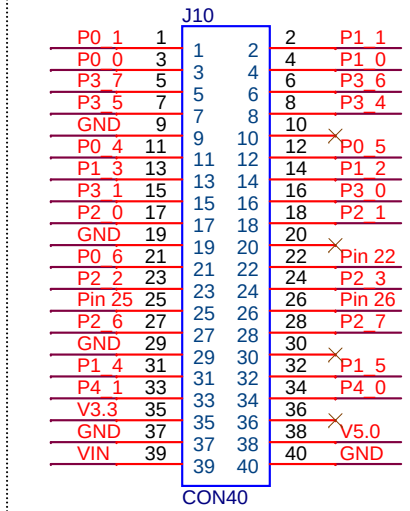

EBK Expansion Connector

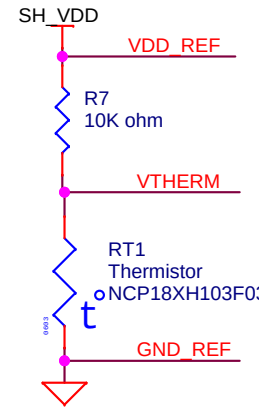

Thermistor

PCA: 121-60144-01
PCB: 600-60182-01
FAB DRW: 610-60175-01
ASSY DRW: 620-60182-01

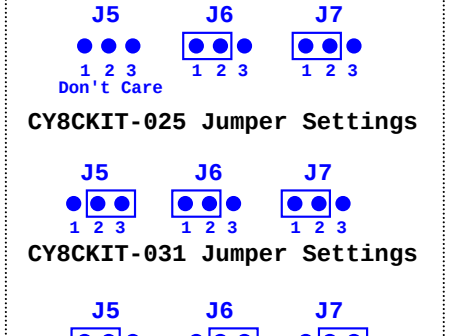

Jumper Settings for different EBKs

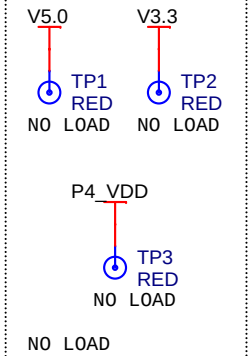

Test Points

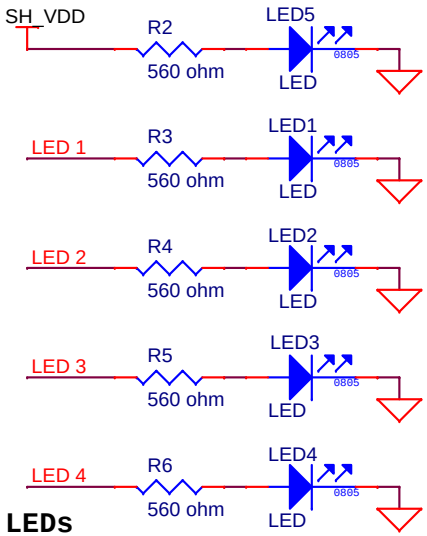

LEDs

CYPRESS SEMICONDUCTOR © 2013	
Title: **CY8CKIT-019 Pioneer Shield**	
Size: A	Document Number: **630-60178-01** Rev: **01**
Date: Monday, December 02, 2013	Sheet 1 of 1